State of New Jersey
Board of Public Utilities

Verizon New Jersey Inc.
OSS Evaluation Project

Draft Final Report

Version 1.1

Submitted by:

KPMG Consulting

September 5, 2001

This page is intentionally blank.

Table of Contents

I. Document Control 7

A. Distribution 9

B. Approved By 10

C. Statement of Limiting Conditions 10

II. Executive Summary 13

A. Introduction 15

1.0 Background 15
2.0 Objective 16
3.0 Audience 16
4.0 Scope 16
5.0 Approach 17
6.0 Limitations 20

B. High-level Test Results 22

1.0 General 22
2.0 Relationship Management and Infrastructure (RMI) 22
3.0 Pre-Ordering and Ordering 22
4.0 Provisioning 23
5.0 Maintenance and Repair (M&R) 23
6.0 Billing (BLG) 23
7.0 Performance Metrics Reporting (PMR) 23

C. Document Structure 24

III. Relationship Management and Infrastructure Domain Results and Analysis Section 25

A. Test Results: Change Management Practices Verification and Validation Review (PPR1) . 27

1.0 Description 27
2.0 Methodology 27
3.0 Results 29

B. Test Results: Account Establishment & Management Verification and Validation Review (PPR2) 35

1.0 Description 35
2.0 Methodology 35
3.0 Results 37

C. Test Results: System Administration Help Desk Functional Review (PPR3) 43

1.0 Description 43
2.0 Methodology 43
3.0 Results 44

D. Test Results: CLEC Training Verification and Validation Review (PPR4) 49

1.0 Description 49
2.0 Methodology 49
3.0 Results 50

E. Test Results: Interface Development Verification and Validation Review (PPR 5) 55

1.0 Description 55
2.0 Methodology 55
3.0 Results 56

F. Test Results: Forecasting Verification and Validation Review (PPR6) 68

1.0 Description 69
2.0 Methodology 69
3.0 Results 70

IV. Pre-Order/Order Domain Results and Analysis Section 73

A. Test Results: Manual Order Process Evaluation (PPR8) 75

1.0 Description 75
2.0 Methodology 75
3.0 Results 79

B. Test Results: Order Management Work Center Support Evaluation (PPR9) 83

1.0 Description 83
2.0 Methodology 83
3.0 Results 89

C. Test Results: POP Functional Evaluation (TVV1) 97

1.0 Description 97
2.0 Methodology 97
3.0 Results 107

D. Test Results: Pre-Order and Order Volume Performance Test (TVV2) 129

1.0 Description 129
2.0 Methodology 129

3.0 Results 135

E. Test Results: Order Flow-Through Evaluation (TVV3) 153

1.0 Description 153
2.0 Methodology 153
3.0 Results 158

V. Provisioning Domain Results and Analysis Section 161

A. Test Results: Network Design Request, Collocation, and Interconnection Planning and Validation Review (PPR7) 163

1.0 Description 163
2.0 Methodology 163

3.0 Results 165

B. Test Results: Provisioning Process Evaluation (PPR10) 173

1.0 Description 173
2.0 Methodology 173
3.0 Results 194

C. Test Results: Provisioning Coordination Process Evaluation (PPR11) 213

1.0 Description 213
2.0 Methodology 213
3.0 Results 219

D. Test Results: Provisioning Verification and Validation (TVV4) 225

1.0 Description 225
2.0 Methodology 225
3.0 Results 229

VI. Maintenance and Repair Domain Results and Analysis Section 237

A. Test Results: End-to-End M&R Process Evaluation (PPR15) 239

1.0 Description 239
2.0 Methodology 239
3.0 Results 243

B. Test Results: M&R Work Center Support Evaluation (PPR16) 247

1.0 Description 247
2.0 Methodology 247
3.0 Results 251

C. Test Results: M&R Coordination Process Evaluation (PPR17) 259

1.0 Description 259
2.0 Methodology 259
3.0 Results 262

D. Test Results: Network Surveillance Support Evaluation (PPR18) 265

1.0 Description 265
2.0 Methodology 265
3.0 Results 272

E. Test Results: M&R RETAS Functional Evaluation (TVV5) 279

1.0 Description 279
2.0 Methodology 279
3.0 Results 284

F. Test Results: M&R RETAS Performance Evaluation (TVV6) 289

1.0 Description 289
2.0 Methodology 289
3.0 Results 295

G. Test Results: End-to-End Trouble Report Processing (TVV7) 299

1.0 Description 299
2.0 Methodology 299
3.0 Results 302

VII. Billing Domain Results and Analysis Section 305

A. Test Results: Billing Work Center/Help Desk Support Evaluation (PPR12) 307

1.0 Description 307
2.0 Methodology 307
3.0 Results 309

B. Test Results: Daily Usage Production and Distribution Process Evaluation (PPR13) 319

1.0 Description 319
2.0 Methodology 319
3.0 Results 320

C. Test Results: Bill Production and Distribution Process Evaluation (PPR14) 323

1.0 Description 323
2.0 Methodology 323
3.0 Results 324

D. Test Results: Billing Functional Usage Evaluation (TVV8) 334

1.0 Description 334
2.0 Methodology 334
3.0 Results 337

E. Test Results: Functional Carrier Bill Evaluation (TVV9) 340

1.0 Description 340
2.0 Methodology 340
3.0 Results 343

VIII. Performance Metrics Domain Results and Analysis Section 351

A. Test Results: Metrics Standards and Definitions Documentation Verification and Validation Review (PMR1) 353

1.0 Description 353
2.0 Methodology 353
3.0 Results 356

B. Test Results: Data Collection and Storage Verification and Validation Review (PMR2) 359

1.0 Description 359
2.0 Methodology 359
3.0 Results 362

C. Test Results: Metrics Calculations and Reporting Verification and Validation Review (PMR3) 383

1.0 Description 383
2.0 Methodology 383
3.0 Results 384

D. Test Results: Metrics Data Filtering and Integrity Verification and Validation Review (PMR4) 391

1.0 Description 391
2.0 Methodology 391
3.0 Results 393

E. Test Results: Metrics Change Management Verification and Validation Review (PMR5) 401

1.0 Description 401
2.0 Methodology 401
3.0 Results 403

Appendix A Statistical Analysis 409

Appendix B Test Cross Reference Master Test Plan to the Final Report 413

Appendix C Summary of Final Report Updates 419

Appendix D Glossary 423

Appendix E Acronym Dictionary 437

This page is intentionally blank.

I. Document Control

This page is intentionally blank.

A. Distribution

Table I-1: Distribution List For Document

Person	Department	Date Sent
Connie O. Hughes, Acting President	State of New Jersey Board of Public Utilities	September 5, 2001
Alyssa Weinberger, Executive Director	State of New Jersey Board of Public Utilities	September 5, 2001
Anthony Centrella, Director	State of New Jersey Board of Public Utilities	September 5, 2001
Frank Chappa, OSS Project Manager	State of New Jersey Board of Public Utilities	September 5, 2001
Lawanda Gilbert	Rate Payer Advocate	September 5, 2001
Robert Graves	Verizon New Jersey	September 5, 2001
Jennifer Stocker	Verizon New Jersey	September 5, 2001
Raymond Sears III	KPMG Consulting	September 5, 2001
Charles King	KPMG Consulting	September 5, 2001
Linda Blockus	KPMG Consulting	September 5, 2001

B. Approved By

Table I-2: Approval List For Document

Person	Department	Date
Frank Chappa, OSS Project Manager	State of New Jersey Board of Public Utilities	

Table I-3: Version Control

Version	Date	Reason
1.0	August 24, 2001	Initial draft release
1.1		Revised draft release
2.0		Final release

C. Statement of Limiting Conditions

The following conditions, limitations, and assumptions relate to the Final Report:

This report is provided pursuant to the secretarial letter issued by the State of New Jersey Board of Public Utilities on February 2, 2000 instructing KPMG Consulting to immediately proceed with testing Verizon New Jersey (formerly Bell Atlantic New Jersey) Operations Support Systems (OSS) in accordance with the KPMG Consulting developed draft Master Test Plan (MTP). The results contained within this report are composed of a significant number of test evaluation criteria and are presented without weighting considerations. In particular, none of the individual test results can be considered independently. To draw conclusions based on individual test measures, or a limited number of test measures, would be inappropriate. Furthermore, the evaluation criteria should not be considered of equal weight or value. Hence, any attempt to determine an overall "score" based on percentage of evaluation criteria that are satisfied is strongly discouraged.

This report assumes that the reader possesses a general understanding of the telecommunications industry and related systems, documentation, and processes; consequently, KPMG Consulting assumes no responsibility for the misuse, misunderstanding, or misinterpretation of the content of this report.

The report has been prepared solely for the purpose stated and should not be used for any other purpose. Except as specifically stated in the report, neither our report nor its content is to be referred to or quoted, in whole or in part, in any registration statement, prFMCctus, public filing, loan agreement, or other agreement or document, without our prior written approval.

Certain information and assumptions (oral and written) have been presented to us by the management of Verizon and other third parties. We have relied on this information in our analysis and in the preparation of the report, and have not independently verified the accuracy or completeness of the information provided; accordingly, we express no opinion on such data.

We have not conducted an audit or review of the historical data provided to us in accordance with generally accepted auditing procedures and/or standards promulgated by the American Institute of Certified Public Accountants (AICPA). We express no opinion or offer any assurance with respect to the accuracy of the aforementioned historical data. KPMG Consulting makes no representation nor has any obligation with reference to any events or transactions occurring subsequent to the date of this report.

This page is intentionally blank.

II. Executive Summary

This page is intentionally blank.

A. Introduction

1.0 Background

The State of New Jersey Board of Public Utilities (NJ BPU) will be considering the matter of Verizon New Jersey's (Verizon NJ) compliance with the requirements of Section 271 of the Telecommunications Act of 1996 (TA-96) in the manner specified in the Board's Docket Nos.TX95120631, TO96070519, and TO98060343. Specifically, the NJ BPU will be opening a proceeding to consider whether Verizon NJ has met the 14-point check list in Section 271. The Telecommunications Act, together with Federal Communications Commission (FCC) interpretations, requires Verizon NJ to:

- Provide non-discriminatory access to its Operations Support Systems (OSS) on appropriate terms and conditions;
- Provide the documentation and support necessary for Competitive Local Exchange Carriers (CLECs) to access and use these systems; and
- Demonstrate that its systems are operationally ready and provide an appropriate level of performance.

Compliance with these requirements is intended to allow competitors to obtain pre-ordering information; execute service orders for resold services, unbundled network elements (UNEs), and UNE-Platform (UNE-P); manage troubles; and obtain billing information in a way deemed non-discriminatory when compared with Verizon NJ's retail operations.

The NJ BPU retained KPMG Consulting to conduct an independent, third-party test of the readiness of Verizon NJ's OSSs, interfaces, documentation, and processes to support local market entry by the CLECs.

The following report reflects the findings of our evaluation.

2.0 Objective

The objectives of this Executive Summary are to provide:

- A high-level description of the process KPMG Consulting followed to evaluate Verizon NJ's policies, procedures, documentation, interfaces, and systems; and
- A summary of the results of testing activities.

3.0 Audience

We anticipate the audience for this document will fall into two main categories:

- Readers who will use this document during an evaluation process (i.e., the NJ BPU, the Federal Commununications Commission (FCC), and U.S. Department of Justice (DOJ)); and
- Other interested parties who have some stake in the result of Verizon NJ's OSS evaluation and wish to have insight into the test results (e.g., Verizon NJ, CLECs, and other ILECs).

While many of the above parties have stated an interest in the test and its results, only the NJ BPU and Verizon NJ are actual parties to this evaluation. Third-party reliance on this report is not intended and is explicitly prohibited. It is expected that the NJ BPU will review this report in forming its own assessment of Verizon NJ's compliance with the requirements of the Act.

4.0 Scope

The scope of the test is documented in the draft Master Test Plan (MTP) dated August 11, 2000.

The initial MTP was developed by KPMG Consulting and submitted to the NJ BPU on January 21, 2000. In its February 2, 2000 secretarial letter, the NJ BPU instructed KPMG Consulting to immediately proceed with testing Verizon New Jersey (formerly Bell Atlantic New Jersey) OSS in accordance with the KPMG Consulting developed draft Master Test Plan (MTP).

Significant input from the NJ BPU, Verizon NJ, and various CLECs was solicited, received, and considered during the MTP development period. Verizon NJ and CLEC business plans and projections were also reviewed during construction of the MTP.

In determining the breadth of the test, all stages of the CLEC-ILEC relationship were considered. These include the following:

- Establishing the relationship;
- Performing daily operations; and
- Maintaining the relationship.

Furthermore, the current service delivery methods (i.e. resale, UNE, and UNE-P) were included in the scope of the test (See Limitations below.)

KPMG Consulting tested different interface types for transactions including: the application-to-application electronic data interchange (EDI) and the terminal-type, web-based graphical user interface (GUI).

Non-transaction testing included evaluations of policies, procedures, guidelines, training, documentation, and work center activities associated with the CLEC/ILEC relationship management process.

Finally, the test included procedures designed to evaluate Verizon NJ's ability to accommodate increased CLEC business volumes based on demand projections determined at the start of the test.

During the conduct of the test, the scope was expanded several times from that contemplated by the draft MTP in response to evolution in the industry, experience gained in preceding state tests or regulatory emphasis by the DOJ and FCC. These included a DSL Line Sharing test, Line Migration test, Line Loss Report test, and a Metrics Change Control test.

5.0 Approach

The test approach is described below.

5.1 Test Families/Domains

To organize and facilitate testing, the MTP was divided into three test families:

- Transaction Validation and Verification (TVV)
- Policies and Procedures Review (PPR)
- Performance Metrics Reporting (PMR)

These three test families were useful in organizing the areas to be tested and the specific tests to be conducted. The Transaction Verification and Validation (TVV) test family was comprised of transaction-based tests, while the Processes and Procedures Review (PPR) test family reviewed Verizon NJ's wholesale business rules and management practices. The third test family, Performance Metrics Review (PMR), reviewed the metrics business rules, the data collection and reporting functions performed by Verizon NJ to measure the performance of their wholesale operations in comparison to retail operations or other benchmarks.

Tests in the PPR and TVV test families were divided into five functional domains:

- Relationship Management and Infrastructure
- Pre-Order and Order
- Provisioning
- Maintenance and Repair
- Billing

Within each test family and domain, evaluation criteria were applied to evaluate Verizon NJ's performance for specific test targets.

5.2 Test Types

In formulating our approach to testing, KPMG Consulting solicited input from both the NJ BPU and the CLECs. It was important to understand the types of activities that had either previously presented problems, or were currently the greatest concern. KPMG Consulting combined this input with our own experience and included it in two fundamental types of tests: transaction-driven and operational. The TVV tests are in the transaction-driven test category and the PPR and PMR tests are in the operational test category.

5.2.1 Transaction-driven Tests

One of the goals of transaction-driven testing was to live the CLEC experience. The fundamental idea was to establish a pseudo-CLEC, and to build and submit both pre-order and order transactions using Verizon NJ's electronic interfaces – much like a real CLEC would do. Transaction-driven system testing was used extensively in the Pre-Order and Order, Provisioning, M&R, and Billing domains.

KPMG Consulting and Hewlett Packard Company (HP) combined efforts to accomplish the transaction-driven tests. KPMG Consulting's role was that of a CLEC operations group – including understanding business rules, creating and tracking orders, monitoring Verizon NJ performance, logging trouble tickets, and evaluating carrier-to-carrier bills. HP's role was that of a CLEC Information Technology group – establishing electronic bonding with Verizon NJ, translating between business and EDI rule formats and aiding KPMG Consulting in resolving problems with missing orders and responses.

Most of the Pre-Order and Order, Provisioning, and many of the Billing transaction-driven tests used the EDI interface that was built by HP based on publicly available Verizon NJ specifications. The GUI was also used to submit selected transactions. Most of the M&R trouble tickets were submitted using the Repair Trouble Administration System (RETAS) GUI.

Live CLEC test cases provided an alternative test method for transactions that were not practical in our test environment (see Limitations below). Moreover, live CLEC test cases facilitated a different perspective on actual production. Live CLEC production was also monitored during the test period to assess the performance and service levels experienced by CLECs during the test.

Over 185 different scenarios were used to structure transaction testing of Verizon NJ's OSS and related support services. An example of a scenario might be "migration as-is of a single line residence customer from Verizon NJ to the pseudo CLEC." Some scenarios were specific to a particular domain, while others spanned multiple domains providing an end-to-end test of Verizon NJ's systems and processes. Variations of each scenario were executed to test a range of feature/function combinations, and to reach desired transaction volume levels.

5.2.2 Operational Tests

Operational tests focused on the form, structure, and content of the business process under evaluation. This test method was used to evaluate Verizon NJ's day-to-day operations and operational management practices, including policy development, procedural development, and procedural change management.

In many cases operational analysis methods were used to evaluate the results of a process to determine if the process was followed and functioned in accordance with documentation and expectations. KPMG Consulting also reviewed management practices and operating procedures, comparing the results against legal, statutory, and other written requirements.

5.3 Military-style Test Philosophy

This test was conducted with a military-style test philosophy. The concept was to report problems discovered during the test, providing Verizon NJ an opportunity to correct those problems and, where feasible, for KPMG Consulting to conduct a retest or follow on assessment. One channel for reporting those problems was the Observations and Exceptions Process, which is defined below:

- If a problem was encountered for which there was no standard resolution channel or if the problem could not be resolved through this channel, KPMG Consulting issued an observation or exception to the NJ BPU and Verizon NJ.
- The problem was identified as an observation if KPMG Consulting determined that it might result in a Not Satisfied finding. The problem was identified as an exception if KPMG Consulting determined that it would result in a Not Satisfied finding.
- Verizon NJ responded to the problems identified by KPMG Consulting via conference call for observations and in writing for exceptions. In some cases, Verizon NJ responded to observations in writing because of issue and resolution complexity. These responses either clarified the issue or described Verizon NJ's intended fix to the problem.
- Once Verizon NJ's intended fix was completed, KPMG Consulting re-tested as required; if the fix did not resolve the issue, the repair and re-test cycle was repeated.
- KPMG Consulting then documented and reported on the re-test activities associated with the identified problem.

The military-style test completes at the sole discretion of the NJ BPU. The NJ BPU determined that all evaluation criteria must be satisfied prior to test completion. The test continued until such time as this requirement was fully met. During the course of testing, KPMG Consulting submitted 111 Observations and 23 Exceptions, of which all observations and exceptions were closed prior to test completion. Observation and Exception reports can be found on the NJ BPU website under the Telecommunications Section at the following URL: http\\www.bpu.state.nj.us.

Where retesting was conducted, the results in this report reflect only the outcome of the retest activity and not from any earlier testing.

5.4 Blindness

As previously stated, one of the objectives of the test was for KPMG Consulting to live the CLEC experience. Yet it is impossible for any CLEC to totally avoid being recognized by Verizon NJ. For example, transactions arrive on dedicated telephone circuits, the owners of which are known by Verizon NJ. Each CLEC has a unique set of IDs assigned by Verizon NJ that must be included in every transaction.

To partially offset this, we instituted certain procedures to help ensure that KPMG Consulting and HP would not receive treatment from Verizon NJ that was different from that received by a real CLEC. For example, we required that all documents given to us be generally available to all CLECs. In addition, the timing and detailed nature of transactions and test calls were not announced in advance to Verizon NJ. When visits to Verizon NJ facilities were required, minimal advance notice was given. We also reported problems using the same Help Desk mechanisms used by the CLECs.

As a further measure, the NJ BPU randomly monitored telephone calls between KPMG Consulting/HP and Verizon NJ. A weekly conference call, which included the CLECs, the NJ BPU and KPMG Consulting, was established to allow the CLECs to obtain information concerning test progress and for them to communicate issues of concern about the test.

5.5 Evaluation Criteria

Measures and their corresponding evaluation criteria provided the basis for conducting tests. Evaluation criteria were the norms, benchmarks, standards, and guidelines used to evaluate measures identified for testing. Evaluation criteria provided a framework for identification of the scope of tests, the types of measures that must be made during testing, and the approach necessary to analyze results.

In many cases, the test results were compared against measures and criteria identified by the NJ BPU, such as the New Jersey Carrier-to-Carrier Guidelines Performance Standards and Reports, dated May, 2000. In other cases, results were evaluated using the professional judgment of KPMG Consulting. Each evaluation criterion was analyzed individually and has its own associated result and comment. The results fell into the following categories:

- Satisfied – the evaluation criterion was satisfied.
- Not Satisfied – the evaluation criterion was not satisfied. Some issues were identified that would have a significant business impact to CLECs. Observations and exceptions may have been raised regarding these issues. As mentioned in Section 5.3, the NJ BPU determined that all evaluation criteria would be satisfied prior to test completion.

5.6 Test Bed

In order to accomplish the transaction testing, Verizon NJ provisioned a test bed of initial accounts that represented Verizon NJ or other CLEC accounts that would be lost to our pseudo-CLEC and, in some cases, subsequently modified to affect customer products and/or services. The notion of a test bed is a logical concept in that the test accounts were created in Verizon NJ's production systems, in actual central offices (COs) spread across the state, not in a separate test system. KPMG Consulting, the NJ BPU, and Verizon NJ cooperated to define the test bed.

6.0 Limitations

The test, representative of an entire CLEC marketplace, was much broader than that likely to be experienced in the near future by any single CLEC. However, the test was not intended to be exhaustive because it is neither feasible nor desirable to test all possible permutations and combinations of all features and functions across all offered products.

In some cases it was not practical to simulate certain order types, troubles, and processes in a test situation. Examples include orders with very long interval periods; provisioning of large volumes of test transactions that would exceed the manual capacity of Verizon NJ's Work Centers; or, the complex, time consuming, Network Design Review (NDR) process. In these cases we attempted alternative test procedures such as conducting interviews with Verizon NJ and CLEC personnel; inspection of live orders in process; review of historical performance or operational reports; or another method that captured the performance of Verizon NJ with respect to the order types and processes in question.

It was neither practical nor desirable to execute certain live tests that would disrupt service to Verizon NJ or CLEC customers. Verizon NJ performance for these test cases was evaluated by other means. The test reports in each domain section identify the tests that were executed using KPMG Consulting transactions and those that were executed by other means.

B. High-level Test Results

1.0 General

The following general observations span several domains and have been collected here for brevity.

1.1 Results Summary

KPMG Consulting evaluated 536 test points during the testing period. Initially there were issues on a number of test points; however prior to test completion all issues were resolved by Verizon NJ. Therefore, all 536 test points were 100% satisfied.

1.2 Serivce Quality

KPMG Consulting believes that the quality of the service received during the test was comparable to that generally received by CLECs. On several occasions, Verizon NJ resources assigned to handle KPMG Consulting problem escalations were senior Verizon NJ resources. KPMG Consulting verified through a review of internal Verizon NJ memorandums and meeting notes that senior level Verizon personnel often involve themselves in problem solving for other members of the CLEC community.

1.3 New Entrant Certification

Verizon NJ developed a separate systems environment for the dual purpose of new entrant certification and pre-production, new release testing called the CLEC Test Environment (CTE). As part of KPMG Consulting's new release testing, quality assurance (QA) and systems readiness test (SRT) processes, the Verizon NJ CTE was evaluated for functionality and compliance with published documentation and procedures. KPMG Consulting tested business rule releases for LSOG4 pre-order and order. Each new release required that KPMG Consulting update its test scripts and orders to reflect the new business rules and interfaces.

2.0 Relationship Management and Infrastructure

The RMI domain evaluated Verizon NJ's processes that support establishing and maintaining relationships between Verizon NJ and CLECs. The test examined change management, account establishment and management, help desks, CLEC training, interface development, and forecasting. RMI consisted of six tests, which contained 81 test points. All 81 test points were satisfied.

3.0 Pre-Ordering and Ordering

The Pre-Order and Order domain evaluation was developed to test the systems, processes, and other operational elements associated with Verizon NJ's support for Pre-Order and Order activities for wholesale operations. The test examined functionality, compliance with measurement agreements, and comparable systems supporting Verizon NJ retail operations. Pre-Order and Order consisted of five tests, of which three were transaction-oriented. KPMG Consulting evaluated 71 test points. All 71 test points were satisfied.

4.0 Provisioning

The Provisioning domain evaluation was designed to review the systems, processes, and other operational elements associated with Verizon NJ's provisioning activities used for wholesale markets. The test examined functionality, compliance with measurement agreements, and comparable systems supporting Verizon NJ retail operations. Provisioning consisted of four tests, of which one was transaction-oriented. KPMG Consulting evaluated 84 test points. All 84 test points were satisfied

5.0 Maintenance and Repair

The primary objective of the M&R domain test was to determine whether adequate procedures, documentation and systems exist to allow a CLEC to identify, report, manage, and resolve troubles encountered with Verizon NJ supplied network elements. M&R consisted of seven tests, of which three were transaction-oriented. KPMG Consulting evaluated 67 test points. All 67 test points were satisfied.

6.0 Billing

The Billing domain included tests of both billing procedures and actual bills generated by the Carrier Access Billing (CABS) and Customer Records Information (CRIS) Systems. Billing consisted of five tests, of which two were transaction-oriented. KPMG Consulting evaluated 69 test points. All 69 test points were satisfied.

7.0 Performance Metrics Reporting

The PMR test family evaluated the processes and systems used to capture Verizon NJ retail and wholesale metrics for all domains, including Pre-Order, Order, Provisioning, Maintenance and Repair, Billing, Operator Services, and General. These tests also included a review of the metrics change management and notification processes.

PMR relied on operational and statistical analyses to facilitate a structured review of Verizon NJ's information processing, metric calculation and reporting procedures. PMR consisted of five tests, which contained 164 test points. All 164 test points were satisfied.

C. Document Structure

This section describes the structure of the document and includes a list of each section number along with a brief description.

Table II-1: Document Overview

Section Number	Section	Content
I	Document Control	Identifies document distribution and necessary approvals.
II	Executive Summary	Describes the test and provides an overview of the results.
III	Relationship Management and Infrastructure Domain Test Section	Describes the relationship management and infrastructure test domain. Provides the detailed test reports related to RMI.
IV	Pre-Ordering and Ordering Domain Test Section	Describes the pre-ordering and ordering domain. Provides the detailed test reports related to the pre-ordering and ordering.
V	Provisioning Domain Test Section	Describes the provisioning domain. Provides the detailed test reports related to provisioning.
VI	Maintenance and Repair Domain Test Section	Describes the maintenance and repair domain. Provides the detailed test reports related to M&R.
VII	Billing Domain Test Section	Describes the billing domain. Provides the detailed test reports related to billing.
VIII	Performance Metrics Reporting Test Section	Describes the process performance test section. Provides the detailed test reports related to Metrics.
Appendix A	Statistical Analysis	Statistical analysis for Performance Metrics.
Appendix B	Test Cross-Reference of the Master Test Plan to the Draft Final Report	Matrix cross-referencing tests in the Master Test Plan to their location in the Draft Final Report.
Appendix C	Summary of Final Report Updates	Matrix summarizing the updates during the period from the August 24, 2001, Version 1.0 release to the XX, 2001 Version 2.0 release.
Appendix D	Glossary	Testing terms and definitions used in this document.
Appendix E	Acronym Dictionary	Primary acronyms and definitions used in the report.

III. Relationship Management and Infrastructure Domain Results and Analysis Section

This page is intentionally blank.

A. Test Results: Change Management Practices Verification and Validation Review (PPR1)

1.0 Description

The Change Management Practices Verification and Validation Review (PPR1) evaluated aspects of Verizon New Jersey's (Verizon NJ) change management process. The objectives of the test were to determine the existence and functionality of procedures for developing, publicizing, conducting, and monitoring change management. The test also focused on the reasonableness of change intervals and tracking mechanisms. Interviews, attendance at change management meetings, reviews of Verizon NJ change notifications, and documentation reviews were conducted to evaluate Verizon NJ's change management process.

2.0 Methodology

This section summarizes the test methodology.

2.1 Business Process Description

The change management process provides the framework where interested parties can communicate desired changes, and Verizon NJ can communicate subsequent alterations to its systems and processes. Change Management policies categorize changes into five types.

- Type 1: emergency changes
- Type 2: regulatory requirements
- Type 3: industry-led changes
- Type 4: Verizon-initiated changes
- Type 5: CLEC-requested changes

The change management process governs all aspects of the relationship between the CLECs and Verizon, excluding metrics change management that is covered in Metrics Change Management Verification and Validation Review (PMR5). All changes to documentation, interfaces, business rules, and other functions excluding metrics are subject to the time frames, tracking, logging, and methods of notification and coding of the change management process.

The process begins with the submittal of a change request of any one of the five types listed above. Type 1 changes are emergencies as determined by Verizon. This type of change is categorized by severity level and implemented on an expedited basis. Type 2 and 3 changes carry priorities and implementation schedules that are governed by regulatory or industry requirements. For Type 4 and 5 changes, the submitting entity may suggest a priority for the request. Verizon determines the overall priority of Type 4 and Type 5 changes after consultation with the CLECs.

The change management documentation published by Verizon includes required intervals for evaluation and completion of changes within each change request type. Final documentation is made available at a specific time prior to implementation of non-emergency changes.

Starting in June 2000, Verizon implemented changes to the notification intervals for Type 4 and Type 5 Change Requests (CR). With CLEC agreement, Type 4 and Type 5 CR documentation for business rules follows a 73-day notification interval and technical specifications follow a 66-day notification interval.

Verizon initiated a number of enhancement activities to increase CLEC awareness of changes in Verizon NJ interfaces that are not specified in the Principles of Change Management document.

- Verizon initiated workshops to discuss and gain CLEC concurrence for specific areas of the Change Management process. The topics discussed at these workshops are escalations, timelines, prioritization, and notification intervals.
- Verizon now schedules conference calls to discuss Type 1 changes. These calls include Verizon subject matter experts who can answer technical questions and provide tentative solution timelines.
- Verizon holds monthly prioritization meetings where CLECs vote on the priority of Type 4 and Type 5 changes.

The Verizon Wholesale Markets Group's Change Control Manager and Change Control Director manage the change control process.

2.2 Scenarios

Scenarios were not applicable to this test.

2.3 Test Targets & Measures

The test target was the Verizon NJ Change Management process and included reviews of the following sub-processes:

- Developing Change Proposals
- Evaluating Change Proposals
- Implementing Change
- Intervals
- Documentation
- Tracking Change Proposals

2.4 Data Sources

The sources of data for this test include the Verizon CLEC Handbook and Verizon Resale Handbook, Telecom Industry Services (TIS) change management process documentation, interviews with Verizon NJ's Change Control Manager and Change Control Director, meeting minutes and material from industry change control meetings, change requests provided by Verizon NJ, and Verizon NJ's change management database.

The data collection performed for this test centered on interviews, walk-throughs, and reviews of documentation supplied by Verizon NJ at the Test Manager's request.

2.4.1 Data Generation/Volumes

This test did not rely on data generation or volume testing.

2.5 Evaluation Methods

Verizon NJ's change management function was evaluated for compliance with stated notification and documentation intervals set forth in the July 6, 2000 Verizon TIS change management policy documents. The period of the test was from March 1, 2000 through February 28, 2001. The test reviewed Verizon Change Management correspondence, the Verizon Change Control Database, and Verizon Industry Change Control meeting minutes. Also, change request items during the test period were examined, and an assessment was performed to determine whether the appropriate change notifications and requisite documents were sent to the CLECs. Specifically, change request items that had the following attributes were included in the assessment:

- An implementation date starting from March 1, 2000 through February 28, 2001.
- Verizon region equal to either South (S) or New Jersey (NJ).
- Changes categorized as 'tentative' were excluded from the assessment.

2.6 Analysis Methods

The Change Management Practices Verification and Validation Review (PPR1) included a checklist of evaluation criteria developed by the Test Manager during the initial phase of the Verizon NJ OSS Evaluation. These evaluation criteria provided the framework of standards and guidelines for the Change Management Practices Verification and Validation Review (PPR1).

The data collected were analyzed employing the evaluation criteria referenced in Table 1-1 below.

3.0 Results

This section identifies the evaluation criteria and test results.

3.1 Results Summary

The results of this test are presented in the table below.

Table 1-1: PPR1 Evaluation Criteria and Results

Test Reference	Evaluation Criteria	Result	Comments
PPR1-1	Change management process responsibilities and activities are defined.	Satisfied	The July 6, 2000 Verizon Telecommunications Industry Services' Change Management Process Document describes change management activities and defines Verizon and CLEC responsibilities. Periodic workshops are held to gain consensus within the CLEC community for proposed changes to the processes.

Test Reference	Evaluation Criteria	Result	Comments
PPR1-2	Essential elements of the change management process are in place and documented.	Satisfied	The change management process elements are defined in the July 6, 2000 Change Management Process document. Additionally, workshops further clarified some issues such as how changes are initiated, evaluated, and implemented. Verizon issued an updated and consolidated Change Management process document called the Wholesale Network Services OSS Interface Change Management document on December 14, 2000 that provides details of these clarifications. At the time testing was conducted, this document had not received final approval by CLECs/Resellers and Verizon.
PPR1-3	The change management process has a framework to evaluate, categorize, and prioritize proposed changes.	Satisfied	The Principles of Change Management document defines five types of changes and recent enhancements define a framework to prioritize and evaluate changes within each type. Processes and procedures were instituted to update and maintain a database for categorizing and tracking the progress of each specific change request. Verizon tracks and reports change requests systematically by assigning a number to each change request (CR). The CR numbers are used in change management communications with CLECs to identify specific changes. Verizon hosts monthly meetings where CLECs (in person or by phone) vote to prioritize Type 4 and Type 5 Change Requests. Due to the sort of changes that Type 1, Type 2 and Type 3 Change Requests represent, the Prioritization Process is not necessary.
PPR1-4	The change management process includes procedures for allowing input from all interested parties.	Satisfied	Following notification of a change, the change management process allows parties to formally comment to Verizon by email. Also, input is provided during monthly change management meetings.

Test Reference	Evaluation Criteria	Result	Comments
PPR1-5	The change management process defines intervals for considering and notifying customers about proposed changes.	Satisfied	The Principles of Change Management Process document and the Telecom Industry Services Change Management Process define the types and intervals for all five categories of change requests. These intervals were reviewed and agreed to with the CLECs as part of a collaborative process.
PPR1-6	Verizon complies with notification intervals and documentation release requirements.	Satisfied	Table 1-2 below displays the results of a CR sample starting March 1, 2000 through February 28, 2001. The table documents Verizon's compliance with the notification intervals and documentation release requirements defined in the Change Management Process document dated July 6, 2000. Verizon notified CLECs on time 96% (176 of 183) of the time for notification and 100% for documentation issuance. For Types 2, 3, 4, and 5 changes, Verizon notified CLECs on time 100% of the time and issued documentation on time for 100% of these changes.
PPR1-7	Procedures and systems are in place to track information such as descriptions of proposed changes, notification dates, and change status.	Satisfied	Each Change Request (CR) is issued a unique CR tracking number. Dates, content, and status of CLEC notices are maintained in Verizon's change control database, which are sorted by the CR number.
PPR1-8	Criteria are defined for the prioritization system and for severity coding.	Satisfied	Within the July 6, 2000 Verizon Telecommunications Industry Services' Change Management Process Document, the Principles of Change Management Process document, and the Telecom Industry Services Change Management Process, Type 1 changes are emergencies and do not require prioritization as they are implemented immediately. Type 2 changes are regulatory changes that include mandatory implementation dates. Type 3 changes are industry standard changes and intervals are determined by Verizon following industry discussions. Type 4 changes are initiated by Verizon and Type 5 by the CLECs. Verizon hosts monthly prioritization meetings where CLECs vote to prioritize Type 4 and 5 change requests.

Additional Data

Table 1-2: Interval Compliance

Change Type	Applicable Intervals and Timelines	Met Notification Interval	Met Documentation Interval
Type 1- Emergency Maintenance	Verizon or a wholesale customer may initiate Type 1 changes. Changes are processed on an expedited basis (typically within hours to one or two days) with a maximum interval of 30 days between identification of a problem and implementation of the change. Processing includes impact analysis, requirement definition, industry notification, and system modification (implementation).	176 of 183	183 of 183
Type 2 - Regulatory	Type 2 changes are mandated by regulatory or legal entities such as the Federal Communications Commission (FCC). Timelines vary based on applicable law and regulatory rules.	5 of 5	5 of 5
Type 3 - Industry Standard	Type 3 changes are initiated by Verizon in response to changes by industry standards and require notification to CLECs with draft change specifications within 60 days after the industry standard specifications are released.	4 of 4	4 of 4
Type 4 - Verizon Initiated	Type 4 changes are initiated by Verizon and require a notification interval of 66 days for technical specifications and 73 days for business rules prior to implementation. The required documentation interval is 45 days prior to implementation. There are no required intervals for new functionality rollouts.	20 of 20	20 of 20

Change Type	Applicable Intervals and Timelines	Met Notification Interval	Met Documentation Interval
Type 5 - CLEC Initiated	Type 5 changes are initiated by CLECs and require a notification interval of 66 days for technical specifications and 73 days for business rules prior to implementation. The required documentation interval is 45 days prior to implementation. There are no required intervals for new functionality rollouts.	8 of 8	8 of 8

This page is intentionally blank.

B. Test Results: Account Establishment & Management Verification and Validation Review (PPR2)

1.0 Description

The Account Establishment & Management Verification and Validation Review (PPR2) evaluated aspects of Verizon New Jersey (Verizon NJ) policies and practices for establishing and managing account relationships with CLEC and Resale customers. The objective of this test was to determine the adequacy and completeness of the procedures for developing, publicizing, conducting, and monitoring account establishment and management activities. Interviews, documentation reviews and comparisons were conducted to evaluate Verizon NJ's account establishment and management program.

2.0 Methodology

This section summarizes the test methodology.

2.1 Business Process Description

The primary points of contact for wholesale customers within Verizon NJ are the Account Management teams. The responsibilities of the Account Management teams include introducing new customers to Verizon NJ products and services, distributing appropriate documentation and contact lists, communicating routine notifications, scheduling and leading network planning meetings, and interfacing with other Verizon NJ units.

2.2 Scenarios

Scenarios were not applicable to this test.

2.3 Test Targets & Measures

The test targets were Verizon NJ's Resale and CLEC Account Management teams and included reviews of the following sub-processes:

- Staffing Responsibility
- Staffing Coverage
- Customer Contact
- Escalation
- Routine and Urgent Customer Communications
- Document Development and Distribution
- Document Structure.

2.4 Data Sources

The sources of data for this test included interviews with Verizon NJ CLEC and Resale Account Management Director and review of the Verizon NJ Telecom Industry Services (TIS) Account Management Responsibilities Guide, the CLEC Handbooks, the Resale Handbooks, and the Verizon NJ Wholesale Markets website.

The data collection performed for this test centered on interviews, walk-throughs, and reviews of documentation supplied by Verizon NJ at the Test Manager's request.

2.4.1 Data Generation/Volumes

This test did not rely on data generation or volume testing.

2.5 Evaluation Methods

The specific test activities executed to complete the evaluation included interviews of Verizon NJ's Account Managers and Directors, and reviews of documentation and account management coverage.

2.6 Analysis Methods

The Account Establishment & Management Verification and Validation Review (PPR2) included a checklist of evaluation criteria developed by the Test Manager during the initial phase of the Verizon New Jersey OSS Evaluation. These evaluation criteria provided the framework of standards and guidelines for the Account Establishment & Management Verification and Validation Review (PPR2).

The data collected were compiled and analyzed employing the evaluation criteria referenced in Table 2-1 below.

3.0 Results

This section identifies the evaluation criteria and test results.

3.1 Results Summary

The results of this test are presented in Table 2-1 below.

Table 2-1: PPR2 Evaluation Criteria and Results

Test Reference	Evaluation Criteria	Result	Comments
PPR2-1	Account establishment and management responsibilities and activities are defined.	Satisfied	The Account Management function is communicated to CLECs in the CLEC Handbook (March 2000, Volume I, Section 6.6) and Resale Handbook (September 2000, Volume I, Section 5.1). Account Managers also use an internal document, called Account Manager Responsibilities Guide, which describes policies and procedures for carrying out their day-to-day responsibilities.
PPR2-2	Account management staffs are organized to provide account coverage.	Satisfied	Each carrier is assigned an Account Manager (AM). The assigned Account Manager is the primary point of contact for that CLEC/Reseller. Verizon policy, as described in the Account Manager Responsibilities Guide, is for Account Managers to return calls within 24 hours of a query. Verizon tracks compliance with this policy through the Account Management Service database. During the interview process, Verizon personnel stated that an Account Manager who is unavailable for an extended period has a designated alternate Account Manager who is made available to the wholesale customer. When an Account Manager is unavailable, email, voicemail, and pager are redirected to their alternate. The alternate then returns the call from the CLEC/Reseller within 24 hours and identifies him or herself as acting in the primary Account Manager's place. The primary Account Manager is responsible for keeping the alternate Account Manager informed of high-level wholesale customer issues.

Test Reference	Evaluation Criteria	Result	Comments
PPR2-3	A description of the account establishment and management process is documented.	Satisfied	The account management process is documented in the CLEC and Resale Handbooks and in the Verizon internal document, Account Management Responsibilities Guide.
PPR2-4	Instructions for contacting account managers are defined and published.	Satisfied	Instructions for contacting the Account Management team are found in the CLEC Handbook (March 2000, Volume I, Sections 5.1) and Resale Handbook (September 2000, Volume I, Section 5.1). Instructions for contacting the Account Management team are also a part of CLEC/Resale connectivity negotiations.
PPR2-5	Procedures for receiving, managing, and resolving customer inquiries are defined.	Satisfied	Policies for receiving, managing, and resolving customer inquiries are presented in the Account Management Responsibilities Guide. This guide is an internal Verizon NJ process document.
PPR2-6	Procedures for escalating critical, time-sensitive, and unresolved customer issues are defined.	Satisfied	During the interview process, Verizon personnel stated that escalation issues are initiated by the CLEC or Reseller and communicated through the applicable work center. Wholesale customers may escalate an issue directly to the Account Manager. Verizon maintains a database for managing escalated issues. Escalation procedures are available on the Verizon website.
PPR2-7	Procedures for making routine, regular communications to customers are defined.	Satisfied	During the interview process, Verizon personnel stated that Industry mailings are distributed via the US Postal Service to all customers who are registered on the Verizon industry mailing list. This information is also posted on the Verizon website
PPR2-8	Verizon NJ has an account management guide describing the managers' roles and responsibilities in the CLEC Handbook.	Satisfied	An Account Management Guide is available in the CLEC Handbook (March 2000, Volume I, Section 6.6) and Resale Handbook (September 2000, Volume I, Section 5.1).

Test Reference	Evaluation Criteria	Result	Comments
PPR2-9	Account managers interact with other Verizon NJ units on the CLECs' behalf.	Satisfied	During the interview process, Verizon personnel stated that each account manager is the primary contact for his or her customers. This role is defined in the CLEC and Resale Handbooks and the Account Management Responsibilities Guide. Verizon uses an internal Verizon document Account Management Responsibilities Guide as a guideline for procedures on how to manage CLEC relationships and deal with issues internal to Verizon on the CLECs' behalf.
PPR2-10	Verizon NJ has formal procedures for account manager coverage in the event that account managers are absent from the office for more than one day for vacations, illness, training, and similar occurrences.	Satisfied	The CLEC Handbook (March 2000, Volume 1, Section 6.6.3) and Resale Handbook (September 2000, Volume I, Section 5.1.3) describe a formal set of procedures to ensure that the Account Management team provides coverage. During the interview process, Verizon personnel stated that an alternate Account Manager is available to customers whenever their primary Account Manager is unavailable.
PPR2-11	Verizon NJ designates and notifies each customer about its alternate account managers.	Satisfied	The CLEC and Resale Handbooks describe a formal set of procedures to ensure that the Account Management team provides coverage. These procedures include designation and customer notification of an alternate Account Manager whenever the primary Account Manager is unavailable. This was determined through interviewing Verizon personnel.
PPR2-12	Account manager responsibilities are posted on the Verizon NJ Wholesale Markets website.	Satisfied	The CLEC and Resale Handbooks are available from the Verizon Wholesale Markets website. These documents define Account Management responsibilities.
PPR2-13	Account managers are equipped to receive communications by email, phone, and pager.	Satisfied	Account Managers are supplied with laptop computers (with email capabilities), cellular phones, and pagers. The CLEC/Reseller is provided with a list of the Account Manager's email address, telephone number, cellular telephone number and pager number.

Test Reference	Evaluation Criteria	Result	Comments
PPR2-14	Procedures are formalized to return customer calls on the day in which they are received when the account manager is in the office, but in no event later than the next business day.	Satisfied	The CLEC and Resale Handbooks and the Account Manager Responsibilities Guide describe the requirement for Account Managers to return calls within one business day. The Verizon NJ Account Management Service database tracks compliance with the standards. KPMG Consulting observed a copy of the database to determine its existence.
PPR2-15	Performance measures are used in allocating account managers and evaluating when to add account managers.	Satisfied	During the interview process, Verizon personnel stated that Account Manager Directors review and use factors such as number of customers, size, and level of activity to determine whether sufficient coverage is available to the customer.
PPR2-16	Responsibilities and procedures for developing, updating, and correcting documentation are defined.	Satisfied	A specific team within Account Management is responsible for developing, updating, and correcting the Handbook series. This group also issues industry mailings. The Handbook series is issued once a year. Modifications to the Handbooks are made on an "as needed" basis, depending on the significance of the change. The first section of each Handbook lists all modifications made since the Handbook was last issued.
PPR2-17	Responsibilities and procedures for maintaining distribution lists and distributing documentation are defined.	Satisfied	Verizon NJ maintains internal documentation that defines responsibilities and procedures for maintaining distribution lists. Distribution and contact lists are managed and maintained by Account Management.

Test Reference	Evaluation Criteria	Result	Comments
PPR2-18	Distribution procedure allows latest document version to be made available to interested parties in electronic and paper versions as soon as they are complete.	Satisfied	The CLEC Handbook is published in the first quarter of the year and the Resale Handbook is published in the third quarter of the year. The latest version of each Handbook is available on Verizon's website. Additionally, the website maintains a log of any changes that were made to the CLEC/Resale Handbooks since the publication. The Handbooks were previously available on CD_ROM however, this format was discontinued in Fall 2000 due to lack of CLEC and Reseller interest.
PPR2-19	Verizon NJ CLEC/ Resale Handbooks are organized in a manner that makes information accessible to CLECs.	Satisfied	Each Handbook is divided into three volumes. Each volume has a comprehensive table of contents that lists the applicable topics and sub-topics. The Handbooks can be downloaded, in total or by topic, from the Verizon website.

This page is intentionally blank.

C. Test Results: System Administration Help Desk Functional Review (PPR3)

1.0 Description

The System Administration Help Desk Functional Review (PPR3) evaluated aspects of the Verizon New Jersey (Verizon NJ) System Administration Help Desk through a process-oriented assessment. The System Administration Help Desk was formerly known as the Bell Atlantic System Support (BASS) Help Desk. As of July 24, 2000, BASS became known internally and externally as the Verizon Wholesale Customer Care Center (WCCC). The objectives of this test were to determine:

- Processes for WCCC were documented.
- Escalation procedures were maintained, documented, and published.
- Management oversight procedures were documented and followed.
- Procedures existed for measuring, tracking, projecting, and maintaining WCCC performance.
- Performance improvement responsibility was defined and assigned.

Interviews, walk-throughs, database reviews, and documentation reviews were conducted to evaluate the Verizon NJ WCCC.

2.0 Methodology

This section summarizes the test methodology.

2.1 Business Process Description

The Verizon WCCC is the primary point of contact for CLECs experiencing system access issues. The Verizon WCCC records and responds to CLEC and Reseller questions regarding connectivity and administration of their interface to Verizon NJ. Verizon procedures require WCCC call agents to record all incoming calls in the WCCC trouble administration database. Each new call from a CLEC initiates a unique trouble ticket number in a database known as Tivoli. The date the call was made, relevant customer information, a description of the problem, and the ultimate resolution is entered in the database. Each trouble ticket is assigned a severity code designating whether the trouble is critical, major, minor, enhancement, or informational. A CLEC may use the trouble ticket number to query its status. Following resolution, the WCCC procedures define the closure process, which includes entering the closure date in the database. Calls for status on existing trouble tickets do not produce new trouble ticket entries.

2.2 Scenarios

Scenarios were not applicable to this test.

2.3 Test Targets & Measures

The test target was the Verizon NJ's WCCC function and included reviews of the following sub-processes.

- Resolution of user problems and issues
- Status tracking and reporting
- Procedures for closing open items

- User initiated escalation
- Performance measurement process
- Process Improvements
- Capacity Management Process

2.4 Data Sources

The data collection performed for this test centered on interviews, walk-throughs, and reviews of documentation supplied by Verizon NJ at the request of the Test Manager. The sources of data and information for this test included an interview with the Verizon NJ Director of WCCC Operations, and reviews of the policy and procedural guides, the WCCC Automated Call Distributor (ACD) database, and the Tivoli trouble administration database.

2.4.1 Data Generation/Volumes

This test did not rely on data generation or volume testing.

2.5 Evaluation Methods

The specific test activities conducted to complete the evaluation included interviews of Verizon WCCC personnel, attendance at WCCC rollout meetings, review of WCCC activities, observations of WCCC help desk representative calls, and walk-throughs of the WCCC in Newark, New Jersey.

2.6 Analysis Methods

The System Administration Help Desk Functional Review (PPR3) included a checklist of evaluation criteria developed by the Test Manager during the initial phase of the Verizon NJ OSS Evaluation. These evaluation criteria provided the framework of standards and guidelines for the System Administration Help Desk Functional Review (PPR3).

The data collected were analyzed employing the evaluation criteria referenced in Table 3-1 below.

3.0 Results

This section identifies the evaluation criteria and test results.

3.1 Results Summary

The results of this test are presented in Table 3-1 below.

Table 3-1: PPR3 Evaluation Criteria and Results

Test Reference	Evaluation Criteria	Result	Comments
PPR3-1	Help desk responsibilities and activities are defined and documented.	Satisfied	WCCC help desk responsibilities and activities are defined on the Verizon Wholesale Markets website in the CLEC Handbook (March 2001, Volume II, Section 5.3) and Resale Handbook (March 2001, Volume II, Section 5.3). In addition, WCCC staff have access to an internal web-based Policy and Procedures Guide, which contains guidelines for carrying out help desk functions. CLECs/Resellers are notified of WCCC updates through their Verizon Account Manager, industry mailings, change control meetings and the Verizon website.
PPR3-2	Customers can initiate a query.	Satisfied	The WCCC is the first point of contact for a CLEC/Reseller having difficulty accessing a Verizon system or where expected results are not received. The help desk is open 24 hours a day, 7 days a week. The WCCC logs all calls in a central database known as Tivoli. The database assigns a unique trouble ticket number to each call answered. Tivoli allows management to determine whether a trouble ticket is open, closed, resolved, or escalated.
PPR3-3	Customers have access to status of query.	Satisfied	Customers can request updated information on the status of a query by providing a trouble ticket number to the WCCC Call Agent. The WCCC tracks the duration of open trouble tickets, which allows the WCCC Call Agent to conduct follow-up phone calls on outstanding trouble tickets. Procedures require that the WCCC Call Agents provide an update within 24 hours of the initial call and every 48 hours afterwards until the customer has agreed to close the trouble ticket.

Test Reference	Evaluation Criteria	Result	Comments
PPR3-4	Customer escalation procedures are defined and documented.	Satisfied	The escalation process is defined in the CLEC Handbook (September 2000, Volume II, Section 5.3) and the Resale Handbook (September 2000, Volume II, Section 5.3). CLECs may initiate the escalation process by selecting the escalation option in the ACD that is routed to the Escalation Module within the WCCC.
PPR3-5	Call intake procedures include logging and acknowledgment.	Satisfied	WCCC Call Agents request specific information at the beginning of each call. Intake information includes customer contact name, company name, problem type, and initial problem identification time. The WCCC system assigns a unique ticket number for each issue logged. The WCCC uses an application called Hot News, which is an internal informational broadcasting system. Hot News notifies all Call Agents of recurring problems that affect multiple CLECs. Lead tickets are created to address multiple CLEC-affecting problems. Hot News information includes the status of the lead tickets, owners of these lead tickets, and descriptions of the problems. For tracking and follow-up purposes, Call Agents own trouble tickets that they opened, closed, resolved, or escalated.
PPR3-6	Process includes procedures for resolving queries within stated timeframes.	Satisfied	If the WCCC Call Agent cannot solve the problem during the call, the trouble ticket number is given to the customer who can then request updated information on subsequent calls. WCCC policy requires Call Agents to contact customers within 24 hours of the initial call and every 48 hours thereafter to provide updated information until the customer agrees to close the trouble ticket. Call Agents refer calls to internal Verizon subject matter experts (SME) if they cannot resolve the issue using WCCC technical resources.

Test Reference	Evaluation Criteria	Result	Comments
PPR3-7	Process includes procedures for closure posting.	Satisfied	The WCCC Call Agent who initially created the trouble ticket handles the process for closure posting. The status of a trouble ticket is not designated as closed until there is agreement with the initiating customer.
PPR3-8	Process includes procedures for status tracking, management reporting, and internal management intervention.	Satisfied	If an issue is not resolved within 72 hours of notification, the WCCC internally escalates the problem to a WCCC specialist. If no solution is made within an additional 48 hours, the issue is escalated to the Verizon manager. If the problem remains unresolved 48 hours after that, it is escalated to a Verizon director for further review and action. KPMG Consulting observed 25 calls made to the WCCC on January 10, 2001. Based on the limited number of calls observed all issues were resolved or escalated within the time frames mentioned. Verizon WCCC personnel trace the progression and status of an escalation through the use of the Tivoli database and tracking system.
PPR3-9	Process includes procedures for maintaining security and integrity of data access controls.	Satisfied	Safeguards exist to prevent unauthorized access to Tivoli. The server is secured and only WCCC personnel have Tivoli system access. Each trouble ticket has a unique number assigned to it requiring an individual to know the trouble ticket number in order access the related data in Tivoli.
PPR3-10	Process includes procedures for obtaining CLEC feedback.	Satisfied	The Verizon Change Control team holds monthly Industry Change Control meetings with CLECs. The feedback received from the CLECs is captured during these meetings and passed to the WCCC Director. The CLECs may also provide feedback through their account manager.

Test Reference	Evaluation Criteria	Result	Comments
PPR3-11	Process performance measures are defined, measured, and reviewed.	Satisfied	During the interview process, Verizon personnel stated that a process performance tool called the Dashboard Report generates monthly reports that follow requirements defined in Verizon NJ internal processes and procedures. WCCC Supervisors, Managers and Directors review these reports for use in evaluating WCCC performance. These reports, which are generated primarily from data contained in the Automatic Call Distribution (ACD) system and Tivoli databases, provide results in sufficient detail to monitor the following processes: performance of WCCC Call Agents, trouble ticket status, abandoned call rates, and WCCC capacity levels. The ACD system call log is used to track the number of calls taken by the WCCC help desk. The ACD call log is capable of generating WCCC statistics such as number of abandoned calls, hold times, and transferred calls.
PPR3-12	Process includes procedure for capacity planning.	Satisfied	WCCC uses the ACD database to track call answer times and other call statistics related to call volume. Based on this information, WCCC Managers may add new Call Agents and/or reallocate existing staff to maintain performance. In addition, the WCCC staff includes a group of off-line resources that are assigned as needed to handle overflow calls to the help desk. To ensure adequate WCCC coverage, capacity-planning procedures require Verizon WCCC management to review these statistics on a regular basis and to make appropriate staffing adjustments.
PPR3-13	Process improvement responsibilities are assigned and executed.	Satisfied	The WCCC Training Manager and the WCCC Methods and Procedures Manager monitor performance in the WCCC to assure that procedures are followed. They are responsible for implementing process improvements through training updates and changes in the operating processes of the WCCC.

D. Test Results: CLEC Training Verification and Validation Review (PPR4)

1.0 Description

The CLEC Training Verification and Validation Review (PPR4) evaluated aspects of the Verizon New Jersey (Verizon NJ) CLEC training program. The objectives of the test were to determine the existence and functionality of procedures for developing, publicizing, conducting, managing, and monitoring CLEC training. Interviews, walk-throughs, database analysis, and documentation reviews were conducted to evaluate the Verizon NJ CLEC training program.

2.0 Methodology

This section summarizes the test methodology.

2.1 Business Process Description

The CLEC training program offers courses in the various products and services available from Verizon for the CLECs. Training opportunities, along with dates, times, and locations of courses are publicized through the Verizon NJ website. In addition, CLECs may request on-site and customized training. The primary functions of Verizon NJ's CLEC training program are developing the courses and curriculum, conducting classes, monitoring instructors, and evaluating training effectiveness.

2.2 Scenarios

Scenarios were not applicable to this test.

2.3 Test Targets & Measures

The test target was Verizon NJ's CLEC training program and included the following processes and sub-processes:

- Training Program Development
  - Develop Curriculum
  - Publicize Training Opportunities
- Training Program Quality Assurance
  - Attendance/Utilization Tracking
  - Session Effectiveness Tracking
  - Instructor Oversight
- Process Management
  - Performance Measurement Process
  - Process Improvement

2.4 Data Sources

The data collection performed for this test relied on interviews, walk-throughs, and reviews of documentation supplied by Verizon NJ at the Test Manager's request. The sources of data for this test included interviews with Verizon NJ's Manager for CLEC Training, the Verizon CLEC Handbook, the Verizon Resale Handbook, the Verizon NJ Wholesale Markets Internet site, and the training-tracking database.

2.4.1 Data Generation/Volumes

This test did not rely on data generation or volume testing.

2.5 Evaluation Methods

The CLEC Training Verification and Validation Review (PPR4) evaluation methods consisted of interviews with the Manager of CLEC Training, direct observation of CLEC training courses, review of training process data, and review of documentation provided by Verizon NJ.

2.6 Analysis Methods

The CLEC Training Verification and Validation Review (PPR4) included a checklist of evaluation criteria developed by the Test Manager during the initial phase of the Verizon NJ OSS Evaluation. These evaluation criteria provided the framework of standards and guidelines for the CLEC Training Verification and Validation Review (PPR4).

The data collected were analyzed employing the evaluation criteria referenced in Table 4-1.

3.0 Results

This section identifies the evaluation criteria and test results.

3.1 Results Summary

The results of this test are presented in Table 4-1 below.

Table 4 1: PPR4 Evaluation Criteria and Results

Test Reference	Evaluation Criteria	Result	Comments
PPR4-1	Training process responsibilities and activities are defined.	Satisfied	Policies and procedures that define responsibilities and activities for the CLEC training process are available in the CLEC Handbook (March 2001, Volume I, Section 8.2) and the Resale Handbook (September 2000, Volume I, Section 7.1). Each instructor is involved in the development of course material and the Training Manager is responsible for overall course development and curriculum.
PPR4-2	Scope and objectives of training process are defined and documented.	Satisfied	The scope and objectives of the CLEC training process are fully defined and are documented in the CLEC Handbook (March 2001, Volume I, Section 8.2) and the Resale Handbook (September 2000, Volume I, Section 7.1). Course schedules and descriptions are available on the Verizon Wholesale Markets website.
PPR4-3	Essential elements of the training process are in place and documented.	Satisfied	The training process includes elements such as course materials, course evaluations, and notification of training opportunities. These elements are documented in the Verizon Training and Education page of the Verizon website that is available to wholesale customers.
PPR4-4	The training process includes procedures for addressing errors and exceptions.	Satisfied	Verizon instructors have informal procedures for updating and correcting errors in the training course curriculum. Comments addressing errors may also be made by the trainee on the evaluation form at the end of each training session.
PPR4-5	Process includes procedures for responding to feedback about training quality.	Satisfied	CLECs may address comments about errors and exceptions in an informal manner to the Verizon CLEC Training Manager. These comments are captured and maintained in the training database. The Verizon CLEC Training Manager attends training sessions and reviews feedback from trainees to monitor the effectiveness of the training program.

Test Reference	Evaluation Criteria	Result	Comments
PPR4-6	Scope of training services covers customer requirements.	Satisfied	Verizon CLEC Training courses are available for all wholesale products and services that Verizon offers to CLECs. Our review of training courses listed on the Verizon website covered the following areas: basic products (POTS), complex products (i.e. ISDN and xDSL and PBX), UNE (i.e. loops, ports, LNP), UNE-P (i.e. Centrex, LSR preparation), directory listing and RETAS (Repair Trouble Administration). During the interview process, Verizon personnel stated that, upon request, courses could also be tailored to meet the specific needs of CLECs.
PPR4-7	Process includes procedures for accepting CLEC input regarding training curriculum.	Satisfied	CLECs may address curriculum input through their Account Manager, directly to the Training Manager, or through the end of course evaluation forms.
PPR4-8	Training offerings are scalable in response to additional demand (e.g., increased class size, number of instructors).	Satisfied	Additional courses are added as needed during the year. Each training course has a limitation on class size. All of the Verizon instructors are cross-trained to teach multiple courses so that they can accommodate high demand for specific courses.
PPR4-9	Process includes procedures for publishing training schedule.	Satisfied	Training schedules are listed on the Verizon Wholesale Markets website for Industry Conferences and Education as well as in the CLEC Handbook (March 2001, Volume I, Section 8.2) and the Resale Handbook (September 2000, Volume I, Section 7.1).
PPR4-10	Process includes procedures to track attendance at courses.	Satisfied	The Training Manager maintains a database that includes the course names, number of attending students, number of attending CLECs, student names, and company names.
PPR4-11	Training performance standards are defined and measured.	Satisfied	Course evaluations measure training performance, course curriculum, course materials, instructor presentation, and instructor knowledge.

Test Reference	Evaluation Criteria	Result	Comments
PPR4-12	Responsibilities for tracking performance are assigned.	Satisfied	During the interview process, Verizon personnel stated that the CLEC Training Manager reviews the student evaluation forms, which address areas such as training curriculum, course materials, and course instructor performance. Results are entered into a database. The Training Manager also reviews performance feedback with each instructor after each class and also provides formal periodic performance reviews.
PPR4-13	Process includes procedures to survey students on effectiveness of training.	Satisfied	Each student completes a course evaluation form to critique topics such as the training curriculum, course content, and classroom materials.
PPR4-14	Process includes procedures to monitor instructor performance.	Satisfied	During the interview process, Verizon personnel stated that the CLEC Training Manager reviews the student evaluation forms, which address instructor performance. Results are entered into a database. The Training Manager also reviews performance feedback with each instructor after each class.

This page is intentionally blank.

E. Test Results: Interface Development Verification and Validation Review (PPR 5)

1.0 Description

The Interface Development Verification and Validation Review (PPR5) evaluated the Verizon New Jersey's (Verizon NJ) interface development procedures. The objectives of the test were to evaluate the processes for developing, publicizing, conducting, managing, and monitoring interface development and interface development support for Competitive Local Exchange Carriers (CLECs).

Interviews, documentation reviews, and testing in Verizon NJ's CLEC Test Environment (CTE) were conducted to evaluate Verizon NJ's Interface Development procedures.

2.0 Methodology

This section summarizes the test methodology.

2.1 Business Process Description

CLECs may access the Verizon NJ's Operational Support Systems (OSS) for Order, Pre-Order, and other services using either an Electronic Data Interchange (EDI) interface or a Web Graphical User Interface (GUI). CLECs that intend to electronically interface with Verizon NJ work with their Verizon NJ Account Manager to set up the electronic interface(s).

A CLEC connecting to Verizon NJ via EDI for the first time undergoes the new entrant testing process, in which the CLEC develops its interface in accordance with Verizon NJ specifications. Afterwards, the CLEC interface is connected to Verizon NJ's CLEC Test Environment and undergoes a sequence of connections and transaction-related tests to ensure the interface can communicate and exchange transactions correctly. The CLEC Test Environment gives a CLEC the ability to test connectivity and to send and receive test transactions.

When Verizon NJ plans a major release to its interface software, it follows a prescribed release process called the New Release Process. This process consists of Verizon NJ releasing the new version of the software in the CLEC Test Environment several weeks before the new version is implemented in the production environment. CLECs then have the ability to test their own systems against the new Verizon NJ software release in a test environment in advance of connecting to the production environment with the new release.

When a CLEC chooses to use the Web GUI to conduct transactions, Verizon NJ provides access to training and documentation and supplies necessary security hardware and passwords.

2.2 Scenarios

Scenarios were not applicable to this test.

2.3 Test Targets & Measures

The test target was to evaluate the functions of developing, publicizing, conducting, managing, and monitoring interface development and interface development support for CLECs. Reviews of the following processes and sub-processes were included in the test targets:

- Developing Interfaces
  - Interface development methodology

- Provision of interface specifications and related documentation to CLECs
- Interface enabling and testing methodology
  - Availability of test environment and CLEC technical support
  - Interface enabling and testing support
- Release management

2.4 Data Sources

This test relied on data contained in documentation provided by Verizon NJ such as the CLEC Handbook, Verizon NJ Business Rules and other documents issued to CLECs through change control. In addition, data gathered from interviews were used to support the analysis of the documentation.

2.4.1 Data Generation/Volumes

This test did not rely on data generation or volume testing.

2.5 Evaluation Methods

The following activities were performed as part of the Interface Development Verification and Validation Review:

- Reviews of Interface Development documentation provided by Verizon NJ
- Interviews with Verizon NJ personnel
- Meetings with the CLEC community
- Interviews with internal KPMG Consulting Interface Development personnel
- Observations of ongoing interface development activities

2.6 Analysis Methods

The Interface Development Verification and Validation Review (PPR5) included a checklist of evaluation criteria developed by the Test Manager during the initial phase of the Verizon NJ OSS Evaluation. These evaluation criteria provided the framework of norms, standards, and guidelines for the Interface Development Verification and Validation Review (PPR5).

The data collected were analyzed employing the evaluation criteria referenced in Table 5-1 below.

3.0 Results

This section identifies the evaluation criteria and test results.

3.1 Results Summary

The results of this test are presented in the table below.

Table 5–1: PPR5 Evaluation Criteria and Results

Test Reference	Evaluation Criteria	Result	Comments
		Methodology	
PPR5-1	Verizon NJ has a software/ interface development methodology that addresses requirements and specification definition, design, development, testing, and implementation.	Satisfied	Development of the Verizon NJ interface and software follows a systematic process. Verizon NJ's methodology for developing the interface specifications begins by defining the business rules and EDI specifications. These specifications and business rules are documented, and any updates or changes to these documents are guided by the Verizon NJ Change Management procedures. Based on the electronic interface requirements and specifications, Verizon NJ's Information Technology teams develop the electronic interfaces and test the software based on defined internal testing methodologies. The implementation of the software also follows a process described in the CLEC/Resale Handbook (September 2000, Volume II, Sections 1.4 and 4.5).

Test Reference	Evaluation Criteria	Result	Comments
PPR5-2	Interface development methodology includes a quality assurance process.	Satisfied	Verizon NJ has quality assurance checks at various levels of the interface development process including specifications development and software development processes For the interface specifications development process, Verizon NJ uses a custom-made tool to help integrate the business rules and EDI specifications. This tool performs a comparison between the EDI specifications and the business rules and reports any discrepancies. There are several internal Verizon NJ organizations that deal with the development and quality of its electronic interfaces. Testing from the individual software module level through to system integration is performed as part of the overall process. Verizon NJ uses a standard regression test suite called the Quality Baseline Validation Test Deck (Test Deck), which contains a known set of standard test scenarios with expected results. Verizon NJ executes this Test Deck against its software release, and an indicator of the quality of the software is the number of test scenarios that generate the expected results. Verizon NJ also uses a Progression Test Deck that consists of a known set of standard test scenarios and these scenarios specifically test the new functionality contained in a particular software release. Complete information regarding the Test Decks is provided in the CLEC/Resale Handbook (September 2000, Volume II, Section 4.5). Also, Verizon NJ's electronic change control distribution list provides the updates and other relevant information on the publication of the Test Decks, its execution and associated results.

Test Reference	Evaluation Criteria	Result	Comments
Interface Specifications			
PPR5-3	Responsibilities and procedures for developing and updating, interface specification document(s) are defined.	Satisfied	Verizon NJ has procedures and defined responsibilities in place for developing and updating the interface specification documents. The process for developing and updating the interface specifications is a coordinated effort between the Verizon NJ Business Rules team, Verizon NJ software development teams, Verizon NJ Change Control organization, and CLECs through collaborative meetings organized by the Verizon NJ Change control forum. The creation and updating of documentation are driven by the Verizon NJ Change Management policies and procedures. In addition, the CLEC/Resale Handbook (September 2000, Volume II, Sections 1.4 and 5.5) provides information to CLECs on industry standards/guideline documentation and the industry change management process through which changes to Verizon NJ OSS interfaces are handled.
PPR5-4	Interface specifications, which define applicable business rules, data formats and definitions, and transmission protocols, are made available to customers.	Satisfied	Several sources are made available to the CLECs to obtain interface specifications and other interface related documentation. Verizon NJ provides documents such as those that support the EDI and Web GUI interfaces, business rules, definitions, and transmission protocols. The following list indicates some of the sources for this documentation: ◆ Verizon NJ's Wholesale Markets website ◆ (http://www.bellatlantic.com/ wholesale) ◆ Verizon NJ Account Manager ◆ Verizon NJ Industry Change Control electronic mail. ◆ Industry letters

Test Reference	Evaluation Criteria	Result	Comments
PPR5-5	On-call customer support for interface specifications is provided.	Satisfied	Verizon NJ provides on-call customer support through its Verizon NJ Wholesale Customer Care Center (WCCC) and acts as the initial point of contact for CLECs with software interface specifications and business rules issues. CLECs may also consult with their Verizon NJ Test Manager and the Account Manager to assist with any documentation issues during the test period and production operations respectively. Information on the function of the WCCC is provided in the CLEC Handbook (September 2000, Volume II, Sections 2.4 and 5.3), and Resale Handbook (September 2000, Volume II, Sections 2.4 and 5.3). Additional information on the WCCC can be obtained from the Verizon NJ Wholesale Markets website (www.bellatlantic.com/wholesale). During its interface development and testing process, KPMG Consulting made use of the Verizon NJ on-call customer support for interface specifications. Additional information is available in the Order Management Work Center Support Evaluation (PPR9) test.

Test Reference	Evaluation Criteria	Result	Comments
PPR5-6	Procedures for updating interface specifications are integrated with formal Change Management procedures.	Satisfied	Verizon NJ follows its Change Management procedures to update interface specifications. These Change Management processes and procedures are contained in documents such as The Principles of Change Management and Telecom Industry Services Change Management Process. The interface specifications are made available to the industry through the Verizon NJ Change Control electronic mail distribution list. In addition, Verizon NJ posts the specifications on the Verizon NJ Wholesale Markets website (http://www.bellatlantic.com/wholesale). The CLEC/Resale Handbook (September 2000, Volume II, Sections 1.4 and 5.5) provides further information on the Verizon NJ Change Management process.
Carrier-to-Carrier Testing			
PPR5-7	Verizon NJ has a methodology for conducting carrier-to-carrier testing with customers seeking to interconnect.	Satisfied	Verizon NJ has a documented methodology in place for conducting carrier-to-carrier testing with existing and new CLECs seeking to interconnect. Information explaining the specifics for conducting testing in the CLEC Test Environment is contained in the CLEC Handbook (September 2000, Volume II, Sections 1.5, 2.1, 2.3, 2.5, and 4.5) and Resale Handbook (September 2000, Volume II, Sections 1.5, 2.1, 2.3, 2.5 and 4.5). The CLEC Handbook (September 2000, Volume II, Section 4.5) and Resale Handbook (September 2000, Volume II, Section 4.5) describe the three phases of certification testing for each new CLEC entrant. Quality Assurance (QA) Testing, Systems Readiness Test (SRT) and CLEC Test Environment (CTE) testing are conducted before submitting transactions in the Verizon NJ production environment.

Test Reference	Evaluation Criteria	Result	Comments
PPR5-8	Functioning test environments are made available to customers for all supported interfaces.	Satisfied	Verizon NJ provides access to its functioning test environment including the EDI interface. In addition, Verizon NJ provides information on the test environment to CLECs through the Verizon NJ Change Control electronic mail distribution list, industry mailings, CLEC/Resale Handbook (September 2000, Volume II, Sections 1.5, 2.5 and 4.5), and the Verizon NJ Wholesale Markets website (http://www.bellatlantic.com/wholesale). KPMG Consulting verified the existence and availability of the functioning test environment by conducting the Systems Readiness Test in the Production Environment followed by June 2000 and October 2000 new release testing in the CLEC Test Environment.
PPR5-9	On-call customer support for interface testing is provided.	Satisfied	The Verizon NJ CLEC test group provides support to all CLECs during the new entrant and new release test periods. Verizon NJ publishes a schedule of conference calls via the Verizon NJ Change Control electronic mail distribution list. These calls are used to disseminate information about new releases and CLEC Test Environment issues. This process is described in the CLEC/Resale Handbook (September 2000, Volume II, Section 4.5). Verizon NJ provided on-call support to KPMG Consulting during the interface test period. Also, a Test Manager/Coordinator was assigned to KPMG Consulting to provide test support. The CLEC/Resale Handbook (September 2000, Volume II, Section 4.5) provides a description of the Test Manager/Coordinator role.

Test Reference	Evaluation Criteria	Result	Comments
PPR5-10	Carriers are provided with documented specifications for active test environments.	Satisfied	Verizon NJ makes available to the CLEC community documents that describe the active test environment. The CLEC Handbook (September 2000, Volume II, Section 4.5) and Resale Handbook (September 2000, Volume II, Section 4.5) contains a description of the CLEC Test Environment and provides explanations on the process and procedures involved with new release and new entrant testing processes. Verizon NJ also provides a documented standard Quality Baseline Validation Test Deck that consists of scenarios for testing Order and Pre-Order transactions in the CLEC Test Environment. A Progression Test Deck is also made available if new functionality is being tested in a particular software release. As observed by KPMG Consulting for the June 2000 and October 2000 release testing, the Test Deck specifications were distributed to CLECs via the Verizon NJ Change Control electronic mail distribution list and were posted on the Verizon NJ Wholesale Markets website (http://www.bellatlantic.com/wholesale/).
PPR5-11	Active test environments are subject to version control and carriers are notified before changes are made.	Satisfied	Verizon NJ uses version control to track its carrier-to-carrier test environment. Whenever a change is made to the CLEC Test Environment, it is given a new version number and the changes are logged. Through the Change Management Practice Verification and Validation Review (PPR1) test, KPMG Consulting verified that procedures are in place to inform the CLEC community of any changes being made to the CLEC Test Environment, which include regularly published industry letters and Verizon NJ Change Management electronic mail distributions and regular conferences calls. This process is described in the CLEC/Resale Handbook, September 2000, Volume III, Section 4.5.2.1).

Test Reference	Evaluation Criteria	Result	Comments
PPR5-12	Procedures are defined to log software "bugs," errors and omissions in specifications and other issues discovered during carrier-to-carrier testing. Responsibility for repairing software "bugs", errors and omissions is assigned to specific Verizon NJ individuals or groups.	Satisfied	Procedures for logging errors and omissions during carrier-to-carrier testing are described in the CLEC/Resale Handbook (September 2000, Volume II, Section 4.5). Additional information on carrier-to-carrier testing support issues, new entrant, and new release processes are also described in the CLEC/Resale Handbook. The Verizon NJ CLEC testing group provides support to CLECs conducting carrier-to-carrier testing and uses a trouble logging and reporting system to record errors, defects and other reported CLEC Test Environment related issues. The Verizon NJ Business Rules team documents interface specification issues in this trouble reporting system. The Verizon NJ Test Manager/Coordinator is a part of the Verizon NJ CLEC testing group and serves as the primary point of contact for CLECs conducting carrier-to-carrier testing. Verizon NJ hosts regularly scheduled conference calls with CLECs that are conducting testing. These calls provide CLECs an opportunity to discuss testing issues with Verizon NJ.

Test Reference	Evaluation Criteria	Result	Comments
Interface Support			
PPR5-13	On-call technical support is provided for production interfaces.	Satisfied	On-call technical support for production-level interfaces is provided primarily by the Verizon NJ Wholesale Customer Care Center (WCCC). The WCCC provides support for electronic interface issues such as EDI related issues, Web GUI login and password problems, business rules, system outages, and other systems related queries. In addition, the CLEC may contact its Verizon NJ Account Manager for assistance. More information is available in the CLEC/Resale Handbook (September 2000, Volume II, Sections 1.4, 2.4, 2.5, and 5.3). During the testing period, KPMG Consulting communicated with the WCCC for support relating to production interfaces. Further information is available in Order Management Work Center Support Evaluation (PPR9).
PPR5-14	Procedures are defined for logging software "bugs," errors and omissions in specifications, and other issues discovered during production use of interfaces. Responsibility for repairing software "bugs", errors and omissions is assigned to specific Verizon NJ individuals or groups.	Satisfied	Any issues that arise with the electronic interface during production are handled following Verizon NJ Change Management procedures. CLECs are referred to the Verizon NJ Wholesale Customer Care Center (WCCC) for any production interface issues. When necessary the WCCC refers interface issues to the appropriate technical organization. A trouble ticket management system, which is used to document and track issues, is described in the CLEC/Resale Handbook (September 2000, Volume II, Section 2.5).

Test Reference	Evaluation Criteria	Result	Comments
PPR5-15	Regular communication forums (e.g., meetings, newsletters, workshops, etc.) are held for CLEC interface developers.	Satisfied	Verizon NJ sponsors regular communication forums, such as Verizon NJ Industry Change Control meetings, workshops, industry mailings, and schedules CLEC conference calls for CLEC interface developers to discuss new releases. Further information is available to CLEC interface developers through Verizon NJ's Wholesale Markets website (http://www.bellatlantic.com/wholesale). In addition, the CLEC /Resale Handbook (September 2000, Volume II, Section 4.5) provides information on the communication channels.
Release Management			
PPR5-16	Business rules and software change logs exist, are updated, and are shared with customers.	Satisfied	Verizon NJ tracks changes and updates made to the electronic interface documentation and software. Verizon NJ maintains change logs for internal and external tracking purposes. Within publicly available interface specification documentation, such as business rules, Verizon NJ maintains a change log of any modifications made to those documents. The business rules are updated when there is a major software release. Major releases are done three times a year. Final versions of the business rules are published forty-five days before the release implementation date. All publicly available documentation on business rules is located on Verizon's website at the following URL: http://128.11.40.241/east/business_rules/ master.htm.

Test Reference	Evaluation Criteria	Result	Comments
PPR5-17	Verizon NJ has defined and documented internal acceptance testing procedures that are used before software is released.	Satisfied	Results of Verizon NJ acceptance testing are published via the Verizon NJ Change Control electronic mail distribution list prior to the software release. The Quality Baseline Validation Test Deck (Test Deck) is used to test software before the CLEC Test Environment is made available to CLECs, the weekend before the software is migrated into the production environment, and within one week after this migration. Results are published each time. More information on the Test Deck and the publication of its results is available in the CLEC Handbook (September 2000, Volume II, Section 4.5) and Resale Handbook (September 2000, Volume II, Section 4.5).
PPR5-18	Methods and procedures are defined for ensuring that errors found during all phases of testing are corrected and changes incorporated into software code.	Satisfied	Verizon NJ has a process with documented procedures in place to handle software changes that are developed as a result of errors discovered during testing. Once a software patch or fix is developed, Verizon NJ ensures that the patch undergoes standard internal quality testing within its internal test environment. Once the software has successfully completed internal testing, the software fix is tested in the CLEC Test Environment. Finally, the modified software is released in the production environment.
PPR5-19	New releases undergo testing prior to migration to a test environment.	Satisfied	Verizon NJ employs several techniques of internal software testing at various stages of the software development life cycle before migrating that software code into the CLEC Test Environment.

This page is intentionally blank.

F. Test Results: Forecasting Verification and Validation Review (PPR6)

1.0 Description

The purpose of the Forecasting Verification and Validation Review (PPR6) was to evaluate the Verizon New Jersey (Verizon NJ) CLEC forecasting process. The objectives of the test were to determine the existence and functionality of procedures for developing, publicizing, conducting, and monitoring forecasting efforts and to ensure the overall forecasting effort had effective management oversight.

2.0 Methodology

This section summarizes the test methodology.

2.1 Business Process Description

The CLEC local demand forecasting process is used by Verizon NJ to gather information from CLECs to anticipate future needs in several areas including interconnection trunks, collocation, unbundled network elements, and resold lines. Forecasts are used by Verizon NJ to properly size and locate network resources, as well as anticipate capacity requirements of the Operations Support System (OSS) and the Telecom Industry Services Operations Center (TISOC).

Forecasts are scheduled semi-annually. The forecasting process begins with an internal verification of the contact information for each CLEC by the Verizon NJ Account Manager. The appropriate CLEC contact is sent a standard letter requesting electronic submission of the forecast within six weeks. This industry letter includes CD-ROM copies of the forecasting forms and instructions for completion.

The CLEC forecast submissions are reviewed using the process outlined in the Verizon Demand Forecasting Workshop Class materials. The review process includes activities such as analyzing historical data and assessing market trends through the use of internal resources and third party research information.

2.2 Scenarios

Scenarios were not applicable to this test.

2.3 Test Targets & Measures

The test target was Verizon NJ's CLEC local demand forecasting process including forecast development, publication and confirmation.

2.4 Data Sources

The sources of data for this test included the Bell Atlantic CLEC Handbook March 2000, Verizon Resale Handbook September 2000, and Verizon Demand Forecasting Workshop Class materials, internal Verizon documentation, and interviews with Verizon personnel.

2.4.1 Data Generation/Volumes

This test did not rely on data generation or volume testing.

2.5 Evaluation Methods

The Forecasting Verification and Validation Review (PPR6) consisted of review and evaluation of Verizon documentation and interviews with Verison staff members.

2.6 Analysis Methods

The Forecasting Verification and Validation Review (PPR6) included a checklist of evaluation criteria developed by the Test Manager during the initial phase of the Verizon New Jersey OSS Evaluation. These evaluation criteria provided the framework of norms, standards, and guidelines for the Forecasting Verification and Validation Review (PPR6).

The data collected were analyzed employing the evaluation criteria referenced in Table 6-1 below.

3.0 Results

This section identifies the evaluation criteria and test results.

3.1 Results Summary

The results of this test are presented in the table below.

Table 6-1: PPR6 Evaluation Criteria and Results

Test Reference	Evaluation Criteria	Result	Comments
PPR6-1	Forecasting process responsibilities and activities are defined.	Satisfied	A summary of the forecasting process and the responsibilities of the CLEC/Reseller and Verizon are described in the CLEC Handbook (March 2000, Volume I, Section 8.3), Resale Handbook (September 2000, Volume I, Section 8.4), and the Demand Forecasting Workshop presentation material.
PPR6-2	Scope and objectives of the forecasting process are defined and documented.	Satisfied	The scope and objectives of the forecasting process are defined in the Demand Forecasting Workshop presentation material. These workshop materials define the use of forecasting data regarding trunk, collocation, Unbundled Network Elements (UNE) and Resale products. More information on the scope, objectives, and activities of the forecasting process is available in the CLEC Handbook (March 2000, Volume I, Section 8.3) and Resale Handbook (September 2000, Volume I, Section 8.4).
PPR6-3	The forecasting process is documented and in place.	Satisfied	The forecasting process exists including timelines, feedback procedures, and the screening process of forecasted data. This is documented in the Demand Forecasting Workshop presentation materials.

Test Reference	Evaluation Criteria	Result	Comments
			The CLEC Handbook (March 2000, Volume I, Section 8.3.1) and Resale Handbook (September 2000, Volume I, Section 8.4) provide information on the forecasting process. Furthermore, there is an explanation of the purpose of the forecasting process and the potential impact of unforecasted demand. A set of forecast form templates is also included in the CLEC and Resale Handbooks.
PPR6-4	The forecasting process includes procedures for addressing errors and exceptions.	Satisfied	Verizon has procedures in place that are established to address errors and/or exceptions that occur with CLEC/Resale forecasted data. As described in the Demand Forecasting Workshop presentation material, the Verizon Account Manager is the main point of contact for a CLEC/Reseller for errors and/or exceptions related to the projections for products and services.
PPR6-5	Forms and templates are provided to facilitate data collection from CLECs and Resellers.	Satisfied	As part of the data collection process, Verizon provides the necessary forecasting forms and templates to the CLECs and Resellers. The three Verizon sources for obtaining the forecasting forms and templates are: ◆ Demand Forecasting Workshop presentation material ◆ Verizon Wholesale website (http://www.bellatlantic.com/ wholesale/index.htm) ◆ Electronic mail sent by Verizon to the CLECs as part of the semi-annual industry letter mailing, requesting carrier-specific forecasting data.
PPR6-6	Data provided by each CLEC is confirmed and verified.	Satisfied	During the interview with Verizon, Verizon stated that CLEC forecasted data is confirmed and verified by the Forecasting group per the process and procedures outlined in the Demand Forecasting Workshop presentation material. As part of the screening, review and verification process, Verizon Product and Account Managers analyze the

Test Reference	Evaluation Criteria	Result	Comments
			CLEC forecast information to ensure that the templates are accurately filled out and work with CLECs if forecasted data appear incorrect based on the CLEC's past ordering experience. Ultimately, CLECs are in control of their forecasted data.
PPR6-7	The process includes requirements for forecast revision.	Satisfied	The forecasting process occurs on a semi-annual basis. Verizon does review its process and procedures for forecasting. This review may include examining aspects such as making the forecasting process more efficient, assessing documentation, and improving its forecasting tools. Modifications are made to the process as needed. CLECs are given the opportunity to revise their forecasts including after submission to Verizon. If Verizon is not able to accommodate the CLEC revisions in that particular cycle, they incorporate them in the future planning cycles.
PPR6-8	Procedures are in place to ensure that confidentiality regarding proprietary CLEC information is maintained.	Satisfied	Verizon personnel that handle the forecasting information are asked to annually sign a Code of Conduct statement to safeguard the confidentiality of CLEC information. This agreement prohibits Verizon employees from sharing confidential CLEC information with unauthorized external and internal parties, including Verizon's Retail operations. The distribution of this proprietary CLEC information is strictly controlled. The list of parties to whom this information is distributed is updated on a regular basis. As described in the CLEC Handbook (March 2000, Volume I, Section 8.3) and Resale Handbook (September 2000, Volume I, Section 8.4), Verizon uses this confidential data internally only for resource planning purposes.

IV. Pre-Order/Order Domain Results and Analysis Section

This page is intentionally blank.

A. Test Results: Manual Order Process Evaluation (PPR8)

1.0 Description

The Manual Order Process Evaluation (PPR8) was an analysis of the Verizon New Jersey's (Verizon NJ) manual order handling processes of the Telecom Industry Services Ordering Centers (TISOCs) that serve the Competitive Local Exchange Carriers (CLEC) conducting business in New Jersey. The manual order process includes orders sent manually as well as orders that do not flow through electronically and require manual intervention. The Newark NJ TISOC processes electronic orders that require manual intervention, while the Silver Spring, MD facility serves as the collection point for faxed orders.

NOTE: KPMG Consulting's test activities for this review were conducted prior to Verizon's May 2001 announcement that the TISOCs would be re-organized along product lines to provide footprint wide assistance and renamed to National Market Centers (NMCs). KPMG Consulting's analysis did not examine this new structure, nor can the results presented in this report be considered to apply to the NMCs. Testing activities for this test were coincident with execution of KPMG Consulting's transaction tests (TVV1, TVV2 and TVV3), and the results are based on the TISOC processes and procedures in place at that time.

2.0 Methodology

This section summarizes the test methodology.

2.1 Business Process Description

CLECs can order wholesale network elements from Verizon NJ either manually or through an electronic interface. CLEC and Reseller orders can enter the Service Order Processor (SOP)/Minimal Input Service Order System (MISOS) in a variety of ways. Once an order is submitted electronically the order is tracked within Local Service Request Manager (LSRM) using the unique Purchase Order Number (PON) specified by the CLEC. The process flow by which orders enter MISOS is illustrated in Figure 8-1 and detailed in the following section.

2.1.1 MISOS Order Submission Process

There are three ways that a Local Service Request (LSR) can flow into MISOS: through the Graphical User Interface (GUI), Electronic Data Interchange (EDI) or via fax. A series of edits is performed as an LSR order moves through the order entry process. Orders are categorized as a Level 2 (manual entry), Level 4 (minimal manual intervention), or Level 5 (complete flow through) during the course of the process.

- **Level 2 –** A level 2 transaction is an order that is submitted via the Graphical User Interface (GUI) or Electronic Data Interchange (EDI), enters Request Manager (RM), and does not flow through but is instead routed by RM to the TISOC for manual entry into MISOS. An order is also level 2 when it flows through RM but does not flow through Request Broker (RB). RB routes the order to the TISOC for manual entry into MISOS due to failed edit checks. Level two orders also include Local Service Requests (LSRs) faxed directly to the TISOC and manually entered into MISOS.

- **Level 4 –** A level 4 transaction is an order where MISOS business rule edits identify an error. The order is placed on hold and routed to downstream organizations. These organizations communicate with the Plant Desk who refers the order to a TISOC representative to complete the processing, eventually creating an entry in MISOS. For example, a request for a new connect is placed on hold in order to verify whether a pre-existing line exists at the facility.
- **Level 5 –** A level 5 transaction is an order submitted through the web-based GUI or EDI interfaces, which flows through RM and RB directly into MISOS without manual intervention. If an order requires manual intervention it drops to either level 4 or level 2 status and a TISOC representative completes the order entry process.

Figure 8-1: Order Process Flow

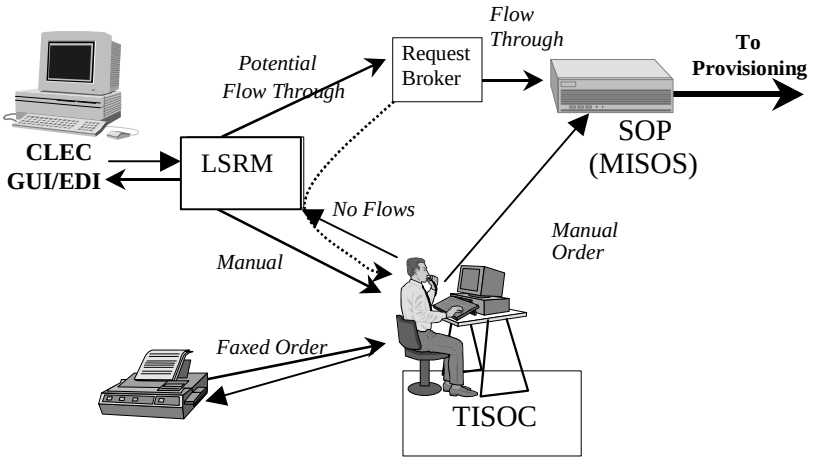

2.1.2 Manual Process

Manual orders are sent via fax to the TISOC located in Silver Spring, MD. A fax clerk accepts manually submitted LSRs, time-stamps them, and then enters each order into the LSRM.

Access Service Request (ASR) orders are faxed to the Silver Spring TISOC where Service Representatives enter them into the Verizon EXACT system. The EXACT system is used as a logging database for faxed orders. TISOC Service Representatives then process and submit ASR orders into MISOS.

Service Representatives in the Newark, NJ TISOC handle Resale, Unbundled Network element (UNE), and Unbundled Network Element – Platform (UNE-P) orders for New Jersey. In addition, the entire Mid-Atlantic TISOC organization (including the Newark TISOC) has a contingency plan to outsource the processing of overflow orders to a center in Langhorne, PA. To date the Newark TISOC has not had to use this overflow capability.

A description of the TISOC center structure and functions is provided in the Order Management Work Center Support Evaluation (PPR9).

2.1.3 Electronic and Manual Error Handling Procedures

CLECs are notified of LSR errors submitted electronically in one of two ways:

- The TISOC Service Representative processing the order returns a query or error response to the CLEC via the same interface used by the CLEC to submit the transaction (i.e. EDI or GUI).
- A query is automatically generated by the system informing the CLEC of the error.

Errors detected by Verizon NJ on flow-through and non-flow-through orders are processed identically.

Queries against manually submitted orders (faxed) are transmitted to the CLEC via fax.

2.1.4 Process Procedures

Each TISOC center manager has oversight responsibility for the activities of the service order processing teams for both flow-through and non-flow-through orders. Work shifts are fixed and, during periods of high order volume, representatives work overtime as needed.

Team leaders and managers monitor staffing levels and make staffing decisions based on recommendations from an in-house force-loading manager (the force-loading manager for TISOCs servicing New Jersey based orders is located in Newark, NJ). Team leaders review orders for integrity of content. Each month the team leader pulls a sample of orders (Resale and UNE) from each Service Representative and reviews it for quality. Team leaders assess quality using TISOC standards for processing accuracy and timeliness. Team leaders also summarize and track the results of these reviews, evaluating them by shift and by team, reporting their findings to the TISOC director.

The TISOC Quality Assurance and Performance Analysis team examines work processes on an ongoing basis. The objective of this team is to reduce the volume of CLEC orders requiring manual intervention by analyzing the most common flow-through errors and recommending process and/or system changes to improve productivity and accuracy. They work with Verizon NJ system developers to prioritize system improvements. Meetings are held as needed.

TISOC managers, in conjunction with personnel from the Metrics, Business Rules, Customer Care Departments, as well as other staff representatives, participate in a weekly conference call to address issues covering workload, process improvement, mechanization, and customer care. This weekly call also addresses issues and questions relating to Methods and Procedures (M&Ps) used by TISOC representatives in the manual processing of transactions. Additional calls are organized as needed.

2.2 Scenarios

Scenarios were not applicable to this test.

2.3 Test Targets & Measures

The test targets for the Manual Order Process Evaluation (PPR8) included review of Verizon NJ's procedures related to manual order. Specific processes and sub-processes in the test target include the following:

- Receive order for manual process
  - Order receipt and logging
- Process orders manually
  - Entry of orders into ordering system
- Send Order Response
  - Delivery of error messages and queries
  - Delivery of confirmations and completions
- Status tracking and reporting
- Problem escalation
  - User-initiated escalation
- Capacity management process
- Process management
  - Management controls
  - Performance measurement controls

2.4 Data Sources

The data collected for this test included TISOC Service Representative Handbook, TISOC Resale Exhibit Guide, various Verizon performance reports and training documents, workflow diagrams and Carrier-to-Carrier Guidelines.

2.4.1 Data Generation/Volumes

This test did not rely on data generation or volume testing.

2.5 Evaluation Methods

The evaluation methodology consisted of interviews, direct observation of the TISOC operations and documentation reviews. It was designed to determine whether Verizon NJ's manual processes provide a framework for efficient receipt, review, and execution of manual orders. KPMG Consulting directly observed TISOC operations and manual order processing. The manual order procedural evaluation was conducted by interviewing Verizon NJ personnel in the Silver Spring and Newark centers. The order process observations included site visits with a Resale team, a UNE team, and a team that processes complex UNE and Resale orders. KPMG Consulting also reviewed the Verizon TISOC Methods and Procedures documentation, the Verizon Competitive Local Exchange Carrier (CLEC) Handbook Series, and the Verizon Resale Handbook Series as inputs for this evaluation.

KPMG Consulting reviewed documentation and sample output from manual ordering systems and tools. KPMG Consulting also examined data collected during production testing and evaluated it to determine if processing procedures were followed as documented on the Verizon website: http://www.bellatl.com/wholesale/html/handbooks/clec/volume_3/c3s7_3.htm.

2.6 Analysis Methods

The Manual Order Process Evaluation (PPR8) included a checklist of evaluation criteria developed by KPMG Consulting during the initial phase of the Verizon NJ OSS Evaluation. These evaluation criteria provided the framework of norms, standards, and guidelines for the Manual Order Process Evaluation (PPR8).

The data collected were analyzed employing the evaluation criteria referenced in Table 8.1 in Section 3.1.

3.0 Results

This section identifies the evaluation criteria and test results.

3.1 Results Summary

The results of this test are presented in Table 8-1 below.

Table 8-1: PPR8 Evaluation Criteria and Results

Test Reference	Evaluation Criteria	Result	Comments
Procedural Clarity and Integrity			
PPR8-1	Manual processes (non-flow-through) are defined and documented for faxed and electronic orders.	Satisfied	These manual processes are detailed in the Service Representative Handbook (Sections 1 and 14) and in the methods and procedures for manual processes (Verizon Request Manager User Guide). KPMG Consulting based these conclusions on its review of Verizon's Methods and Procedures, other documentation and interviews with Verizon staff.
PPR8-2	Internal ownership of manual orders is assigned and tracked through the process.	Satisfied	LSRs are assigned a unique Purchase Order Number (PON) and Service Representatives are responsible for tracking them within the LSRM database. CLECs can use this PON number as a reference when contacting the service center. KPMG Consulting based these conclusions on its review of Verizon's Methods and Procedures, interviews with Verizon staff, and on-site observations.
PPR8-3	The process includes procedures for tracking performance, addressing errors, and escalating problems.	Satisfied	Management and supervisory personnel monitor the performance of individual representatives through defined measures and production reports extracted from the LSRM. These daily reports can be used to review performance and timeliness information for an individual representative, a specific department, and the entire TISOC as a whole. Individual Service Representative reports are pulled periodically for management review and are used to coach and develop other skill sets. Management personnel review reports from the Automated Call Distribution (ACD) system, which

Test Reference	Evaluation Criteria	Result	Comments
			collects call data associated with each Service Representative's call histories. Corrective action to remedy problems is taken as appropriate. Each month, team leaders review a sample of Resale and UNE orders for each Service Representative for integrity of content according to TISOC standards for timeliness and service order accuracy. Team leaders summarize and track the results, evaluating them by shift and by team, and report findings to the TISOC director. Errors are addressed directly with an order's originating Service Representative. Problems are escalated internally through managerial intervention. The Service Representative Handbook and the Verizon website further detail the escalation process. (http://www.bell-atl.com/ wholesale/html/res_escalate_clec.htm) KPMG Consulting based these conclusions on its review of Verizon's Methods and Procedures, other documentation, interviews, and on-site observations.
Walk-through Elements			
PPR8-4	Complete and standardized order intake logs are present and up-to-date.	Satisfied	The electronic tracking logs observed from LSRM were real time and readily accessible for order status and tracking. ASR orders are entered into and tracked by the EXACT database. LSRM provides data to track Confirmation Date, Queries, Pending Orders, Confirmed Orders, Past Date Due (Due Date plus 2 days), Volume of Work (orders received, by type), and Completions. KPMG Consulting based these conclusions on its review of Verizon's Methods and Procedures, other documentation, interviews, and on-site observations.
PPR8-5	Order process status is tracked and reported to management.	Satisfied	Management personnel track order status through the use of management oversight, electronic tools, and reports, primarily the Case Progress History (CPH) screen of the LSRM. Any anomalies that are noted through management monitoring of the ACD are researched and analyzed as to the cause, and appropriate corrective action is recommended to management. KPMG Consulting based these conclusions on its review of Verizon's Methods and Procedures, other documentation, interviews, and on-site observations.

Test Reference	Evaluation Criteria	Result	Comments
PPR8-6	A capacity planning process exists and includes elements such as transaction volumes and resource utilization.	Satisfied	Capacity planning is based on a number of factors including quantity of orders received at the centers, Service Representative productivity levels, and forecasts of future order volumes. Details are provided in Section 5 of the TISOC Mid-Atlantic Regions Operations Plan. Verizon NJ has procedures in place to use overtime workers (voluntary and mandatory), cross train workers, and shift specified work between the various Verizon TISOC locations as required in order to accommodate volatility in demand. Temporary call and business volume increases are addressed by using other center personnel, requiring overtime work, and hiring new personnel. CLECs are notified of unanticipated high call volume via the change control process. Capacity planning for the TISOC is provided by the Force-loading Manager at the Newark TISOC and by the Verizon NJ metrics team. KPMG Consulting based these conclusions on its review of Verizon's Methods and Procedures, other documentation, and interviews.

This page is intentionally blank.

B. Test Results: Order Management Work Center Support Evaluation (PPR9)

1.0 Description

The Order Management Work Center Support Evaluation (PPR9) was an analysis of the Work Center/Help Desk pre-order and order processes employed by Verizon New Jersey (Verizon NJ). These processes provide assistance to Resellers and Competitive Local Exchange Carriers (CLECs) with Ordering Support questions, escalations, problems, and issues related to pre-ordering, and ordering.

NOTE: KPMG Consulting's test activities for this evaluation were conducted prior to Verizon's May 2001 announcement that the Telecommunications Industry Service Operations Centers (TISOCs) would be re-organized along product lines to provide footprint-wide assistance and renamed to National Market Centers (NMCs). KPMG Consulting's analysis did not examine this new structure, nor can the results presented in this report be considered to apply to the NMCs. Testing activities for this test were coincident with the execution of KPMG Consulting's transaction tests (TVV1, TVV2 and TVV3), and the results are based on the TISOC processes and procedures in place at that time.

2.0 Methodology

This section summarizes the test methodology.

2.1 Business Process Description

This section provides an overview of the Wholesale Customer Care Center (WCCC) and Telecom Industry Services Operations Center (TISOC). The WCCC handles system access issues such as system errors and password problems. The TISOC handles Local Service Request orders (LSRs) and generates service orders for provisioning.

2.1.1 Wholesale Customer Care Center (WCCC)

The Wholesale Customer Care Center (WCCC) was opened on July 24, 2000, in Newark, NJ. The center succeeds the Bell Atlantic System Support (BASS) Help Desk located in Silver Spring, MD.

The WCCC's primary function is to serve as the single point of contact for CLECs, responding to their questions and concerns for the entire Verizon footprint. The WCCC is the primary point of contact for CLECs experiencing system access difficulties regardless of the interface used (i.e. Web GUI or EDI). Issues addressed include those relating to password problems, system errors, secure ID synchronization, PIN resets, and server problems.

While CLECs are encouraged to call the WCCC for trouble resolution, they can also contact other help desks independent of the WCCC. Contact numbers for these other centers are found in the CLEC Handbook, Section 5.3, which is available on the Verizon Wholesale Markets website at http://www.bellatl.com/wholesale/html/handbooks/clec_resale/volume_2/cr2s5_3. htm.

Figure 9-1 shows the structure of the Wholesale Customer Care Center.

Figure 9-1: WCCC Organization

The Executive Director is assisted by the Operations Director and the Manager. The Manager oversees six functional team leads and a number of call agents. Managers from the following three additional Verizon organizations provide support to the WCCC: Methods and Procedures, Staff Support and Training, and Systems Development.

Four WCCC functional groups (Billing, Escalations, System, and PON Exception) provide call agents as the initial interface with the CLECs. Within each functional group, agents are further specialized as online or offline call agents. The remaining WCCC functional groups (Change Control and Metrics) handle internal Verizon issues and do not support call agents. The WCCC operates 24 hours a day, 7 days a week including holidays with each functional group supported throughout the day. Daily work shifts are scheduled as follows:

Midnight – 8 AM
7 AM – 4 PM
8 AM – 5 PM
10 AM – 7 PM
Noon – 9 PM
4 PM – Midnight

Overtime is used to meet staffing requirements to handle temporary increases in volume. Either WCCC administrative staff or offline staff may also be solicited to assist with changes in order volume. Long-term staffing requirements are met by recruiting new agents.

CLECs contact the WCCC by dialing the following number: 1-877-WHOL-CCC. An Automatic Call Distributor (ACD) Auto-Attendant prompts the caller to select one of the following menu options:

1. System
2. Exceptions
3. Billing
4. Escalations
5. Other

Once the caller selects a menu item on the ACD, the call is automatically routed to an online call agent that specializes in the selected function. Mangers monitor call volumes for each functional group and bring additional agents online as needed. Misdirected calls can be warm-transferred (a transfer that occurs while the CLEC and the initial agent remain on the line until the transfer is complete) either to another functional group within the WCCC or to another work center or help desk within Verizon. Incoming calls are tracked and given a unique trouble ticket number in the Tivoli database. The Tivoli database is the system that is used by Verizon to track the status and work history of an order.

WCCC call agents may respond to CLECs in one of the following ways:

1. Immediately answer questions and close the trouble ticket.
2. Contact another functional group within the WCCC on the customer's behalf and provide updates.
3. Take the details of the trouble and call the CLEC back with an update.
4. On misdirected calls, the CLEC is warm transferred to another work center or help desk within Verizon. There also may be occasions when another work group is bridged on the line with the customer and help desk.

All issues called in by CLECs are assigned a trouble ticket, and the online agents' aim is to close those trouble tickets during the initial call. Trouble tickets that cannot be immediately resolved are referred to offline groups for investigation, resolution, and closeout. In the event that an offline agent cannot resolve an issue, the agent uses an internal escalation process and refers the issue to Tier 2 CLEC support, which may include experts from other work centers/help desks. This failing, the problem is referred to Tier 3 CLEC support, which is comprised of application specialists and/or system engineer personnel. The WCCC continues to own the problem throughout the trouble resolution process and offline agents are responsible for ensuring that the issue is resolved and closed out with the CLEC.

CLECs may also request trouble ticket escalation. The Escalation Group tracks these trouble tickets in the Tivoli database.

2.1.2 Telecom Industry Services Operations Center (TISOC)

The primary function of the Mid-Atlantic Telecom Industry Services Operations Center (TISOC) is to process local service requests (LSRs) for Resale, UNE loop and Platform services, and to generate service orders for provisioning by downstream organizations. The TISOC handles CLEC questions associated with the generation and completion of service orders. Issues are tracked by the Purchase Order Number (PON) provided by the CLEC on the LSR within the Local Service Request Manager (LSRM). Questions can include pre-order and order business rule questions, order submission questions for electronic and manual order processes, and service order change requests prior to provisioning. Information on Verizon's manual order processes is found in the Manual Order Process Evaluation (PPR8) and information on provisioning work centers is found in Provisioning Process Evaluation (PPR10).

Figure 9-2 shows the structure of the Mid-Atlantic TISOC.

Figure 9-2: Verizon NJ Mid-Atlantic TISOC Organization

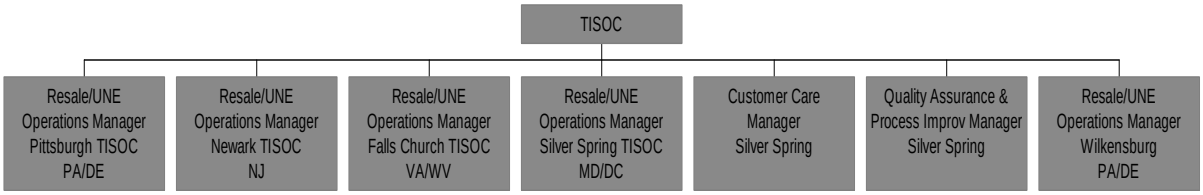

The Mid-Atlantic TISOC Organization operates from four geographically dispersed locations. The Pittsburgh PA location handles service requests for PA and DE; the Newark NJ location serves NJ; the Falls Church VA location serves VA and WV; while the Silver Spring MD location serves MD and the District of Columbia. The Silver Spring TISOC also processes faxed orders for all Verizon-South states. The Newark TISOC location houses a Web GUI Help Desk that also serves the Verizon-South states. Each TISOC location has a management team that reports to the Operations Director of the Mid-Atlantic TISOC.

An overflow center located in Langhorne, PA handles order submissions during high order volume periods. The overflow center is a contingency arrangement and has not been used in practice by the Newark TISOC.

The Web GUI Help Desk provides CLEC support for pre-order and order business rules questions, and Web GUI access and navigation questions. Web GUI Help Desk representatives can offer CLECs walk-throughs of the GUI, troubleshoot problems, and assist with LSR issues including format and field questions. Web GUI system support issues such as outages, are handled through the WCCC by calling 1-877-WHOL-CCC.

The Newark TISOC maintains an internal help desk, the Plant Help Desk, which serves as an interface to downstream provisioning centers, the RCCC (Regional CLEC Coordination Center), and the RCMC (Regional CLEC Maintenance Center). This help desk is unique to the Newark TISOC. Plant Help Desk Service Representatives support the downstream organizations by resolving provisioning questions/problems originating from errors on service requests. Write-ups of changes to service orders are communicated to TISOC representatives for rework.

TISOC hours are Monday to Friday 8 a.m. – 6 p.m. ET. Center managers can be reached by pager at all times. Daily work shifts are scheduled as follows:

7:45 AM – 3:45 PM
8:30 AM – 4:30 PM
9:00 AM – 5:00 PM
9:30 AM – 5:30 PM
10:15 AM – 6:15 PM

Team Leaders and Managers monitor staffing levels and make staffing decisions based on recommendations from a Force-loading Manager. This manager has force-loading responsibility for the Newark TISOC.

The Mid-Atlantic TISOC is organized as a virtual center so that all CLECs can reach it by dialing the same 1-888-TISOC88 number. An automatic call distributor (ACD) system prompts the caller to select a menu item depending on the geographic location of the end-user, and/or the type of service required. Each TISOC location is accessed via a separate menu selection. Callers can access the Web GUI Help Desk either by transfer from another TISOC location, or by selecting option 6 on the ACD. Misdirected CLEC calls can be warm-transferred to other TISOC locations or to internal Verizon work centers/or help desks as appropriate, (e.g. WCCC).

When a CLEC places a call to the TISOC about an order, the TISOC representative identifies the order by the unique PON number provided by the CLEC. The TISOC representative tries to resolve most issues during the initial call, or escalates first to a Team Leader, then to an Escalation Specialist, then to a TISOC Manager, and finally to the TISOC Director.

Calls to the Web GUI Help Desk are tracked via the Call Tracking System (CTS). Representatives at the help desk input call details including an assigned tracking number; the PON number in question; relevant customer information such as name, address, and UserID, and description of the problem and its resolution. Calls are closed upon resolution and the closure date is entered into the database.

2.2 Scenarios

Scenarios were not applicable to this test.

2.3 Test Targets & Measures

The test target was Verizon NJ Work Center/Help Desk support functions and included evaluation of the following processes and sub-processes:

- Respond to Help Desk call
  - Answer call
  - Interface with user
  - Log call
- Process Help Desk call
  - Access to systems to observe user problems
  - Resolve user question, problem, or issue
- Close Help Desk call
  - Log closure information
- Monitor status
  - Track status
  - Report status
- Request escalation
  - Manage escalations
- Manage the Help Desk process
  - Provide management oversight
- Capacity management process

2.4 Data Sources

The data collected for the test included Verizon Wholesale Markets Website, TISOC Service Representative Handbook, TISOC Work Flow Process Charts, NJ Carrier-to-Carrier Guidelines, Performance Standards and Reports, Verizon training materials, TISOC Administrative Support Center Reference Binder, Verizon organization charts, and various production reports.

2.4.1 Data Generation/Volumes

This test did not rely on data generation or volume testing.

2.5 Evaluation Methods

The evaluation methodology, comprised of interviews, direct observation of the work center operations, and documentation reviews, was designed to determine whether the WCCC, TISOC, and Web GUI Help Desk meet the established evaluation criteria listed in Section 3.1. The methodology for conducting the work center/help desk evaluation consisted of interviews with Verizon NJ employees responsible for both order entry and support functions as well as supervisory and management personnel; direct observations of the WCCC, TISOC and Web GUI Help Desk operations in Newark, NJ; and also detailed analysis of Verizon NJ documentation.

KPMG Consulting conducted structured interviews with Verizon NJ using guides generated from the evaluation criteria. KPMG Consulting also observed Verizon NJ processes and procedures using information from the evaluation criteria. In addition, KPMG Consulting considered its own experience, via the Pre-Ordering, Ordering and Provisioning (POP) Functional Evaluation (TVV1) transaction test, with the various work centers and help desks to verify that Verizon NJ's actual procedures were in line with documented procedures.

2.6 Analysis Methods

The Order Management Work Center Support Evaluation (PPR9) was conducted using a checklist of evaluation criteria developed by KPMG Consulting during the initial phase of the Verizon NJ OSS Evaluation. These evaluation criteria provided the framework of norms, standards, and guidelines for the Order Management Work Center Support Evaluation (PPR9).

The data collected were analyzed employing the evaluation criteria referenced in Table 9-1 in Section 3.1.

3.0 Results

This section identifies the evaluation criteria and test results.

3.1 Results Summary

The results of this test are presented in Table 9-1 below.

Table 9-1: PPR9 Evaluation Criteria and Results

Test Reference	Evaluation Criteria	Result	Comments
PPR9-1	The scope of the Verizon NJ Work Center(s)/Help Desk(s) services covers customer requirements for order submission.	Satisfied	Verizon NJ support organizations, the WCCC, TISOC, Web GUI and Plant Help Desks, offer customers support during each phase of the ordering process, and also cover customer requirements during the order submission process. More detail on the order submission process is documented in the CLEC/Resale Handbook Volume 3 Section 7. KPMG Consulting based these conclusions on its review of Verizon's Methods and Procedures, other documentation, interviews, and formal

Test Reference	Evaluation Criteria	Result	Comments
			observations.
PPR9-2	The Work Center/Help Desk(s) scope, objectives, responsibilities, and activities are defined and documented.	Satisfied	TISOC, WCCC and Web GUI Help Desk scope, objectives, responsibilities, and activities are defined and documented in the CLEC/Resale Handbook Series, Section 5.3 of Volume II. It defines the scope, procedures, hours of operation, and basic contact information for each organization. This information is available at http://www.bell-atl.com/wholesale/html/handbooks/clec_resale/volume_2/cr2s5_3.htm. KPMG Consulting based these conclusions on its review of Verizon's Methods and Procedures and other documentation.
PPR9-3	A complete description of the Work Center/Help Desk process is documented.	Satisfied	WCCC Help Desk processes, contact information, hours of operation, and escalation procedures are described in the Verizon NJ WCCC Methods and Procedures Process Flows document and on the Wholesale Markets website at www.bell-atl.com/wholesale/html/customer-doc.html. Other Help Desk and TISOC processes are described in various Verizon documents including training manuals, the Tivoli Training Guide, and the TISOC Service Representative Handbook. KPMG Consulting based these conclusions on its review of Verizon's Methods and Procedures and other documentation.

Test Reference	Evaluation Criteria	Result	Comments
PPR9-4	The Work Center (s)/Help Desk (s) process includes procedures for addressing errors and exceptions.	Satisfied	The WCCC processes that facilitate trouble resolution (including exceptions) for CLECs are documented in the WCCC Methods and Procedures Process Flow Guide. Any issues that cannot be resolved by call agents can be escalated for resolution. The Web GUI Help Desk and TISOC processes documented in their training guides include provisions for handling errors and exceptions. The escalation process for the TISOC is documented on Verizon NJ's Wholesale Services website at: http://www.bell-atl.com/wholesale/html /res_escalate_clec.htm. KPMG Consulting based these conclusions on its review of Verizon's Methods and Procedures, other documentation, interviews, and formal observations.
PPR9-5	The Work Center/Help Desks have processes in place to respond in a timely manner, provide accurate information, and to meet established timeframes for providing service.	Satisfied	At the WCCC, call representatives are separated into four separate functional groups (Systems, PON Exceptions, Billing, Escalations) and trained to handle the functions provided by those groups. At the TISOC, representatives are also organized into various groups (Resale, UNE and UNE-P) and are further divided into simple and complex orders within those groups. These organizational structures help to make the center conducive to providing accurate and timely information. Both the WCCC and TISOC maintain a statistical reporting system to monitor timeliness and order accuracy of the services provided. In addition, periodic observation, feedback, and training for personnel help to ensure that representatives are meeting service objectives. Those issues that cannot be resolved immediately at the TISOC and Web GUI Help Desk may be escalated through a documented escalation procedure. This is available on the Verizon Wholesale Website at: http://www.bell-atl.com/ wholesale/html/tisoc.htm. KPMG Consulting based these

Test Reference	Evaluation Criteria	Result	Comments
			conclusions on its review of Verizon's Methods and Procedures, other documentation, interviews, and formal observations.
PPR9-6	The Work Center/Help Desk process includes complete and standardized call intake procedures (logging and acknowledgment).	Satisfied	All incoming calls are tracked in their respective systems in regards to time and date of call, caller identification information, ticket ID, issue and ticket status. Calls to WCCC utilize the Tivoli system, TISOC work is logged into the Case Progress History (CPH) section of the LSRM, and representatives at the Web GUI Help Desk collect information in CTS. KPMG Consulting based these conclusions on its review of Verizon's Methods and Procedures, other documentation, interviews, and formal observations.
PPR9-7	The Work Center/Help Desk(s) includes procedures for referral both into and out of Help Desk(s).	Satisfied	The CLEC handbook available on Verizon's Wholesale Markets Website (http://www.bell-atl.com/ wholesale/html/handbooks/ clec_resale/volume_2/cr2s5_3.htm) indicates when to contact the various work centers/help desks. Agents and representatives at their respective centers are provided with contact lists for other work centers and help desks and have capability to either transfer or conference calls as needed. KPMG Consulting based these conclusions on its review of Verizon's Methods and Procedures, other documentation, interviews, and formal observations.
PPR9-8	The Work Center/Help Desk process includes complete and standardized procedures for closure posting.	Satisfied	Each of the three centers has similar standardized procedures for closure of open tickets. The WCCC owns open issues until they are resolved with closure details noted in their Tivoli system. A TISOC call is tracked until closure and recorded in the CPH section of the LSRM. Resolution is indicated by a queried or confirmed message sent to the CLEC for each unique ticket. At the Web GUI Help Desk, upon the closure of a ticket, the representative handling the issue records the closure date

Test Reference	Evaluation Criteria	Result	Comments
			in CTS. KPMG Consulting based these conclusions on its review of Verizon's Methods and Procedures, other documentation, interviews, and formal observations.
PPR9-9	The Work Center/Help Desk process includes complete and standardized procedures for status tracking and management reporting.	Satisfied	Each center has complete and standardized procedures for status tracking and management reporting. The WCCC assigns each issue a ticket number used to track the issue in the Tivoli system. Metrics reports extracted daily from various systems, including Tivoli, provide past performance information. TISOC calls are assigned a unique PON number used for tracking the status in the CPH screen of the LSRM. Changes in status are logged here. TISOC management uses LSR reports to track issued, queried, pending and confirmed orders including those that are past due. At the Web GUI Help Desk, CTS is used to record and store trouble ticket information. Management uses the CTS status information (Open vs. Closed) to evaluate the performance of the issue resolution duties of the Help Desk. KPMG Consulting based these conclusions on its review of Verizon's Methods and Procedures, other documentation, interviews, and formal observations.

Test Reference	Evaluation Criteria	Result	Comments
PPR9-10	The Work Center/Help Desk process includes complete and standardized procedures for escalating issues/problems.	Satisfied	The WCCC has an escalation desk that tracks an issue through the Tivoli database, where the notes are updated on the ticket status. If additional work is needed, an issue can be sent to the "PON Shop", a center that handles situations where a notifier may be late and/or missing. The escalation lists for the WCCC are further documented in the WCCC Methods and Procedures Process Flows document. Escalation procedures for the Mid-Atlantic TISOC and Web GUI Help Desk are available on Verizon's Wholesale Markets website at: http://www.bell-atl.com/wholesale/html/res_escalate_ clec.htm. KPMG Consulting based these conclusions on its review of Verizon's Methods and Procedures, other documentation, interviews, and formal observations.
PPR9-11	The Work Center/Help Desk process includes procedures for maintaining security and integrity of data access controls.	Satisfied	Application and data servers are on the Verizon-Corporate Local Area Network (LAN), which is subject to documented corporate security procedures, i.e. system access, passwords, and firewalls. Callers to the WCCC and Web GUI Help Desk are required to provide the issue's unique tracking number (i.e. PON) in order to gain further information regarding the status of the issue. The Call Tracking System at the Web GUI is maintained on a secure server, which is backed up every two hours. GUI Help Desk representatives use CLEC's UserID to view GUI orders with read-only access. Verizon NJ buildings have controlled access via identification badges. KPMG Consulting based these conclusions on its review of Verizon's Methods and Procedures, other documentation, interviews, and formal observations.
PPR9-12	The Work Center/Help Desk process performance measures are defined, measured,	Satisfied	The WCCC uses a number of tools to measure and track performance, including the use of the Tivoli database and daily metrics reports. These reports are broken

Test Reference	Evaluation Criteria	Result	Comments
	and assigned.		down by functional group and are used by management to monitor performance and to determine training needs of the service representatives. The TISOC has defined performance measures and specific groups assigned to monitor and track performance. Performance reporting is based on data extracted from LSRM that is analyzed to form a basis for corrective action. Daily representative performance and order status are observed by the Force-Loading Manager and by management personnel through the LSRM system and through reports extracted from this system. In addition, supervisory personnel conduct direct observation of ACD representatives as well as assess summary reports from ACD. Training and Metrics personnel are also responsible for TISOC operational performance reporting and staffing. The Quality Assurance Group focuses on process analysis and improvement within the TISOC. The Metrics Team provides TISOC performance data down to the Service Representative level, and produces ad hoc reports for Verizon NJ to track specific CLEC activity (type and volume of orders). A weekly call with TISOC group personnel serves to identify process issues and to develop strategies to address their resolution. KPMG Consulting based these conclusions on its review of Verizon's Methods and Procedures, other documentation, interviews, and formal observations.
PPR9-13	A Work Center/Help Desk process exists to track business and transaction volumes and resource utilization for use in the capacity planning process.	Satisfied	Verizon NJ has procedures in place to use overtime workers (voluntary and mandatory), cross train workers, and shift specified work between the various Verizon TISOC locations as required in order to accommodate volatility in demand. The WCCC Director monitors long-and short-term resource needs and makes adjustments as needed. Tools employed

Test Reference	Evaluation Criteria	Result	Comments
			include various daily metrics reports for observing past performance and projecting future resource needs. Temporary call and business volume increases are addressed by using other center personnel, requiring overtime work, and hiring new personnel. CLECs are notified of unanticipated high call volume via the change control process. At the TISOC, metrics and training personnel are responsible for tracking and monitoring resource utilization, training development and delivery, TISOC operations performance reporting, and staffing in order to meet capacity requirements. Capacity planning for the Newark TISOC and Web GUI Help Desk is provided by the Force-Loading Manager at the Newark TISOC and by the Verizon NJ metrics team. This information is documented in Section 5 of the TISOC Mid-Atlantic Regions Operations Plan. KPMG Consulting based these conclusions on its review of Verizon's Methods and Procedures, other documentation, interviews, and formal observations.

C. Test Results: POP Functional Evaluation (TVV1)

1.0 Description

The Pre-Order, Order, and Provisioning (POP) Functional Evaluation (TVV1) for the Electronic Data Interchange (EDI) and Graphical User Interface (GUI) evaluated the systems, processes, and other operational elements associated with the Verizon New Jersey (Verizon NJ) pre-order and order processes. The objective of this test was to validate the existence, functionality, and performance of the Verizon NJ interfaces and processes for pre-ordering and ordering transaction submissions and responses.

2.0 Methodology

This section describes the test approach and methodology used to execute the POP Functional Evaluation (TVV1).

2.1 Business Process Description

EDI connectivity is established by building an interface based upon the Verizon NJ pre-order and order Business Rules, the Verizon NJ EDI specifications, and the EDI industry standards. Once EDI connectivity is established, CLECs can submit transactions.

To use the Verizon NJ GUI, CLECs must access the Verizon NJ systems. The GUI is an Internet application, in which access is controlled via user IDs and passwords. Once the Verizon NJ GUI is accessed, CLECs can submit transactions.

Two transaction processes were central to the POP Functional Evaluation (TVV1): the pre-ordering process and the ordering process. As part of the pre-ordering process, CLECs submit pre-order queries to validate existing customer information, to inquire on facility and technician availability, and to obtain data (e.g., telephone numbers, service feature codes, etc.) that may be input on subsequent service orders. In response to a pre-order inquiry, Verizon NJ returns a valid pre-order response or an error message.

The ordering process begins with the origination of a Local Service Request (LSR) by a CLEC. Upon receipt of a LSR, Verizon NJ generates a Functional Acknowledgement (FA), indicating that the GUI or EDI file was successfully received. For the GUI, the FA is an interim message that is overlaid with the subsequent response. The LSR then passes through the Verizon NJ order-processing environment where systems and representatives perform validations to determine if the order is properly formatted and contains accurate data. If errors are found, Verizon NJ transmits an Error Message (ERR) to the CLEC. Depending upon the condition, CLECs submit a new or supplemental service request to correct the error. Once the LSR successfully passes through the validation process, Verizon NJ generates a Local Service Request Local Response (LSRLR) for EDI transactions and a Local Service Confirmation (LSC) for GUI transactions. This LSRLR/LSC confirms that Verizon NJ validated the LSR and provides a Due Date (DD) on which Verizon NJ commits to completing the requested service.

Verizon NJ transmits a Provisioning Completion Message (PCM) in response to LSRs informing the CLEC that activities to complete the service request are completed. Verizon NJ transmits a subsequent Billing Completion Message (BCM) following the conclusion of downstream billing system updates.

Figure 1-1 below provides an overview of the Verizon NJ EDI and GUI Pre-Order and Order process. Figure 1-2, on the following page, provides a system view of the Pre-Order and Order process once a transaction reaches Verizon NJ.

Figure 1-1: POP Functional Evaluation Process

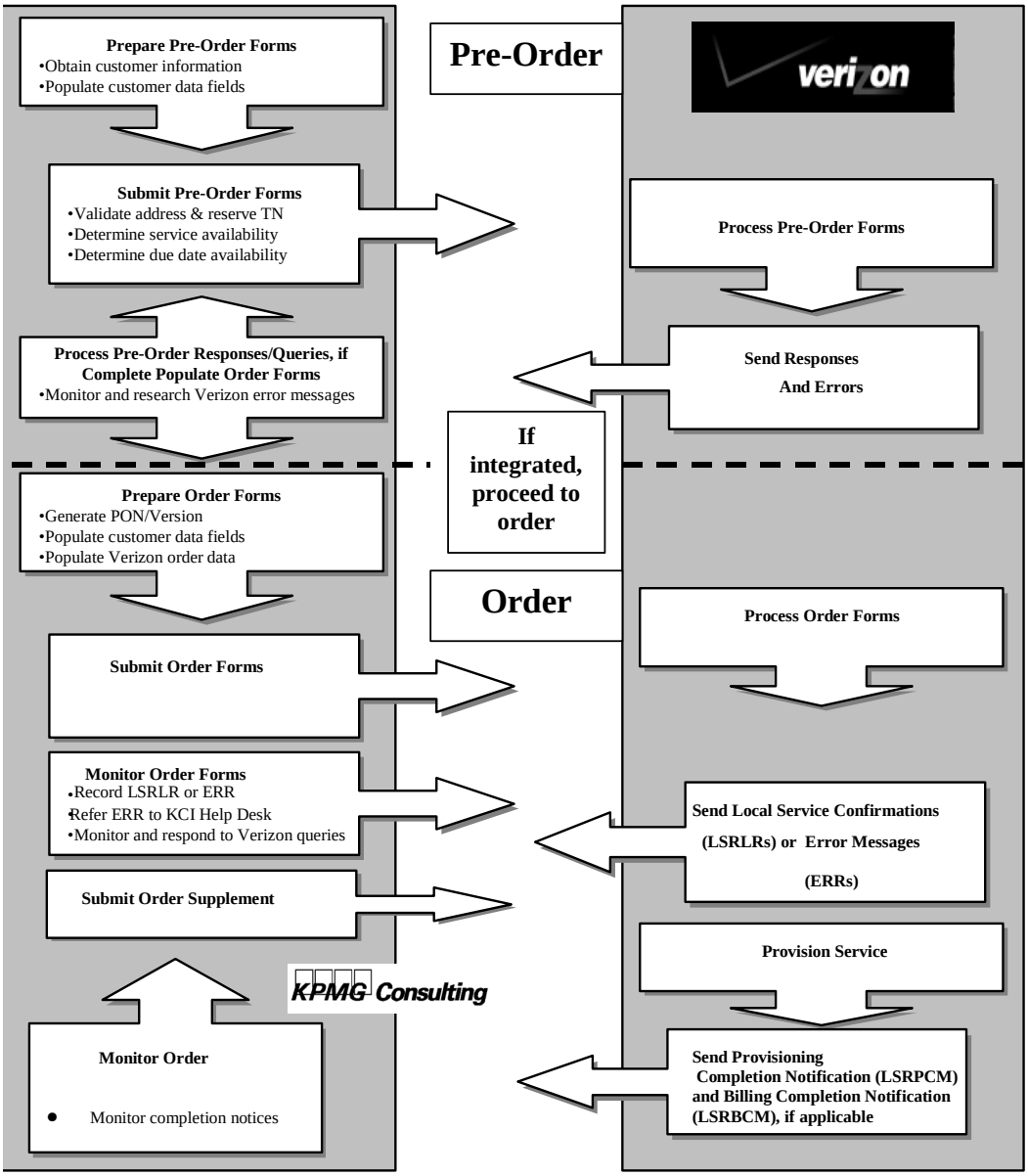

Figure 1-2: Pre-Ordering and Ordering System View

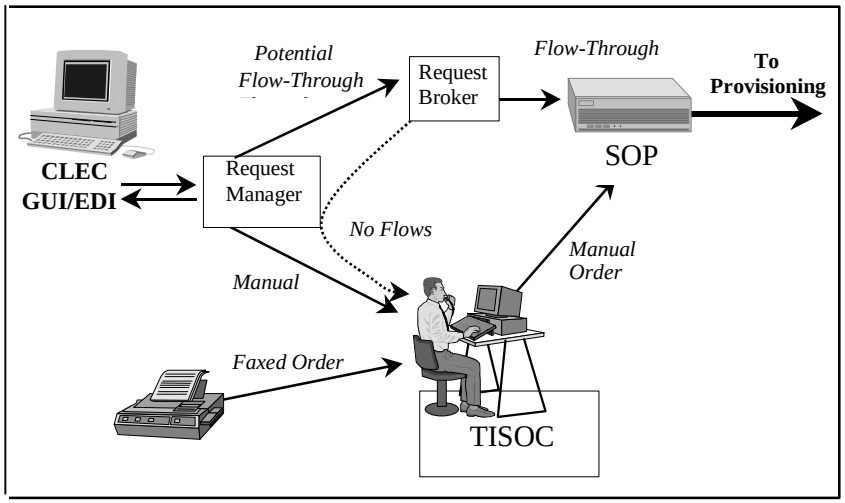

2.2 Scenarios

Tables 1-1 through 1-4 list the pre-order and order scenarios used in TVV1.

Table 1-1: Functional Pre-Order Test Scenarios

Activity	Residence	Business
Obtain Customer Service Record (CSR)	**X**	**X**
Validate customer address (ADR)	**X**	**X**
Reserve and release telephone numbers (ADR, ADI, TR1, TR3, TR5)	**X**	**X**
Perform directory listing inquiry (DLR)	**X**	**X**
Inquire about feature and service availability (PSA)	**X**	**X**
Determine if customer's loop qualifies for ISDN (LQB)	**X**	**X**
Determine if customer's loop is xDSL capable (LXR)	**X**	**X**
Determine availability of desired due date (DDA)	**X**	**X**
Inquire about Installation Status (ISR)	**X**	**X**
Inquire about Status of Service Orders (SOR)	**X**	**X**

Table 1-2: Functional Order Test Scenarios: Resale

Activity	Res. POTS	Bus. POTS	Res. ISDN	Bus. ISDN	Centrex	Private Line	Digital Handoff
Migration from Verizon NJ "as is"	X	X	X	X	X		X
CLEC to CLEC migration	X	X					
Feature changes to existing customer	X	X			X		
Migration from Verizon NJ "as specified"	X	X	X	X	X		
New customer	X	X	X	X		X	
Telephone number change	X	X					
Directory change	X	X			X		
Add lines/trunks/ circuits	X	X	X	X	X	X	X
Suspend/restore service	X	X					
Disconnect (full and partial)	X	X	X	X	X	X	X
Moves (inside and outside)	X	X					
Convert line to ISDN			X	X			
Migrate from CLEC to Verizon NJ	X	X					

Table 1-3: Functional Order Test Scenarios: Unbundled Network Elements Platform (UNE-P)

Activity	Res. POTS	Bus. POTS	Res. ISDN	Bus. ISDN
Migration from Verizon NJ "as is"	X	X	X	X
Migrate from CLEC to CLEC	X	X		
Feature changes to existing customer	X	X		
Migration from Verizon NJ "as is specified"	X	X	X	X
New Customer	X	X		
Telephone number change	X	X		
Directory change	X	X		
Add lines/trunks/circuits	X	X	X	X
Suspend/restore service	X	X		
Disconnect (full and partial)	X	X	X	X
Moves (inside and outside)	X	X		
Convert line to ISDN			X	X
Migrate from CLEC to Verizon NJ	X	X		
Convert from Resale to UNE-Platform	X	X		

Table 1-4: Functional Order Test Scenarios – UNE Loop

Activity	Res. Analog Loop	Bus. Analog Loop	Res. xDSL Capable Loop	Bus. xDSL Capable Loop	Bus. DS1 Loop	Inter-office Facility
Migrate lines from Verizon NJ w/o number port.	X	X			X	
Migrate from CLEC to CLEC	X	X				
Add new lines to existing customer	X	X	X	X	X	
Add new interoffice DS1/DS3 facilities						X
Purchase lines for a new customer	X	X			X	
Disconnect (full and partial)	X	X			X	
Moves (inside and outside)	X	X				
Directory Listing Change	X	X				
Convert from Resale to UNE loop	X	X				
Purchase lines for a new customer using line sharing			X	X		
Full disconnect of a customer with Line Sharing Services			X	X		
Migrate POTs line of a CLEC ADSL Line Sharing customer back to Verizon NJ			X			
Migrate UNE EEL lines from Verizon NJ w/o number port.	X	X			X	
Add new lines to existing UNE EEL	X	X			X	
Purchase UNE EEL lines for a new customer	X	X			X	
Disconnect UNE EEL Lines(full and partial)	X	X			X	

2.3 Test Targets & Measures

The test targets were Verizon NJ's pre-order and order transaction processes via the EDI and GUI interface including the following processes and sub-processes.

The following processes and sub-processes were included in the test target for pre-orders:

- Submit pre-order transaction:
  - Send pre-order transaction
  - Receive match response
  - Receive near match response
  - Receive error response

- Follow up on delayed or erred pre-order activities:
  - Request status of response
  - Escalate request for information if necessary
  - Request pre-order transaction population support
  - Request pre-order error correction support

The following processes and sub-processes were included in the test target for orders:

- Submit order:
  - Send order transaction
  - Receive acknowledgment of request
  - Receive confirmation of request (LSRLR/LSC), error/reject response (ERR) and verify receipt of response
  - Verify accuracy and completeness of response
- Submit an Error:
  - Send error in order transaction
  - Receive acknowledgment of request
  - Receive planned error/reject response (ERR) and verify receipt of response
  - Correct error(s)
  - Resend order
  - Receive LSRLR/LSC
- Supplement an order:
  - Send supplement
  - Receive acknowledgement of supplement
  - Receive confirmation of supplement (LSRLR/LSC), error/reject response (ERR) and verify receipt of response
- Correct error(s)
- Resend supplement
- Receive LSRLR/LSC
- Pre-order/Order Integration
  - Populate integration orders with information from designated pre-orders
  - Submit integration orders
  - Receive acknowledgement
  - Receive confirmation of supplement (LSRLR/LSC), error/reject response (ERR) and verify receipt of response
  - Check service order status
- Follow-up on delayed or erred order activities
  - Request status of response
  - Escalate request for information is necessary
  - Request order population support

- Request order error correction support
- Receive provisioning completion message (PCM)
- Receive provisioning completion transaction
- Match response to order transaction and confirmation
- Receive billing completion message (BCM)

2.4 Data Source

The data collected for the test included all versions of the Verizon LSOG4 ordering, pre-ordering and ASR Business Rules that were current during the transaction period of the test; the Verizon Resale Handbook, the Verizon CLEC Handbook, Verizon EDI and Web GUI user guides, the Verizon NJ USOC lists, Verizon's CTE test decks, the New Jersey Carrier-to-Carrier Guidelines performance Standards and Reports in addition to the transactions, responses and notifications generated by KPMG Consulting pseudo CLEC activity.

2.4.1 Data Generation/Volumes

KPMG Consulting determined appropriate transaction levels for functional testing by analyzing the available pre-order types, order delivery methods and activity types.

2.5 Evaluation Methods

The Master Test Plan (MTP) defined a set of pre-order and order scenarios for testing in the POP Functional Evaluation (TVV1). The scenarios outline, at a high level, which products and services to order and the activity types to request. Using these descriptions, KPMG Consulting developed test cases for each scenario. Each test case contains a detailed description of the case and describes order requirements, including customer type (business and residential), migration activity (partial and full migration[1]), flow-through designation, and other information necessary to execute the test case. Note that KPMG Consulting was unsuccessful in gaining the cooperation of any CLEC operating in New Jersey to support Local Number Portability (LNP) testing. As a result, none of the LNP scenarios, identified in Appendix A of the MTP were tested.

Each test case was then used to generate distinct pre-order and order transactions. Verizon NJ provided test bed accounts, which were provisioned based on the test case descriptions, against which pre-order and order transactions were placed. The pre-order and order transaction scenarios and test cases represented a range of service families (e.g., POTS, ISDN, and Centrex) executed against a variety of service delivery methods (e.g. Resale, UNE, and UNE-P) and activity types (e.g., New, Change, Disconnect, Move).

In January 2001, the NJ BPU asked KPMG Consulting to evaluate a CLEC's ability to order Line Sharing services as an add-on to the approved MTP. KPMG Consulting created additional test cases to evaluate Line Sharing functionality. At the time of this test, only new connections, changes to existing service and disconnects were supported by Verizon NJ.

[1] A full migration converts all of a customer's lines to a new service provider. A partial migration retains at least one line with Verizon-NJ and converts some lines to a CLEC.

2.5.1 EDI Functional Evaluation

EDI transaction responses were evaluated for consistency with the pre-order and order business process flow, as described in Section 2.1. In addition, KPMG Consulting evaluated transactions to determine if they flowed through Verizon NJ interfaces without manual intervention based on a comparison of scenario driven expectations, response timeliness and data reported by Verizon. Both flow-through and non-flow-through transactions were evaluated for timeliness, accuracy, clarity, and completeness of responses.

KPMG Consulting used the Verizon NJ LSOG4 Business Rules and EDI Guide to prepare pre-order and order transactions. The business rules detail the form and field information required to submit valid pre-order inquiries and order requests. The EDI Guide details mapping of business field entries to EDI transaction sets for transmission to Verizon NJ via the EDI interface.

KPMG Consulting used an internally developed end-user application to populate pre-order and order transactions. The transactions were then sent to the Test Transaction Generator (TTG - Hewlett Packard). The TTG translated the transaction data into EDI format and transmitted the pre-order or order request to Verizon NJ. EDI responses from Verizon NJ were received through the TTG into the pre-defined format and transmitted to KPMG Consulting.

The TTG was responsible for recording date and timestamp information at the transaction level, both upon submission of LSR and receipt of responses (FA, LSRLR, LSC, ERR, PCM, and BCM).

KPMG Consulting submitted stand-alone pre-orders and orders to evaluate Verizon NJ system functionality. When necessary, pre-orders were also submitted to obtain information necessary to validate customer information or to provide input for a subsequent order (LSR).

KPMG Consulting analyzed pre-order and order field content and field formats to evaluate the degree of compliance with the Verizon-South Business Rules. In addition, KPMG Consulting tested pre-order and order integration. This was accomplished by transferring the results from Direct Telephone Number (TN) Selection, Customer Service Records, Scheduling and Availability (Due Date Availability [DDA]), and Feature and Service Availability pre-orders to subsequent orders. KPMG Consulting also manually transferred information received within LSRLRs/LSCs into two pre-order inquiries: Installation Status and Service Order.

KPMG Consulting tracked the status and progress of submitted pre-orders and orders. Error responses were researched (either internally or by contacting the Verizon NJ Help Desk), corrected, and re-submitted as appropriate. KPMG Consulting also investigated missing, late, and/or incorrect responses.

KPMG Consulting derived EDI ordering system availability for the time of active testing (in hours and minutes) for the period of September 15, 2000 through March 20, 2001. The total amount of time that KPMG Consulting experienced system unavailability was subtracted from the total testing time. This result was then divided by the sum total time of active testing during the September 15, 2000 through March 20, 2001 period, which was then expressed as a percentage. KPMG Consulting also reviewed Verizon NJ system outage notices comparing reported outages to our experience for accuracy and consistency. EDI Pre-Order system availability was calculated in the same manner as EDI ordering. Pre-Order system availability was tested (in hours and minutes) from September 18, 2000 through March 14, 2001.

2.5.2 GUI Functional Evaluation

GUI transaction responses were evaluated for consistency with the pre-order and order business process flow, as described in Section 2.1. In addition, KPMG Consulting evaluated transactions to determine if they flowed through Verizon NJ interfaces without manual intervention based on a comparison of scenario driven expectations, response timeliness and data reported by Verizon. Both flow-through and non-flow-through transactions were evaluated for timeliness, accuracy, clarity, and completeness of responses.

To prepare pre-order and order transactions, KPMG Consulting used the Verizon NJ LSOG4 Business Rules and GUI User Guide. The business rules detail the form and field information to submit valid pre-order inquiries and order requests.

KPMG Consulting populated and then submitted various types of pre-order and order transactions to Verizon NJ. GUI transactions were submitted that were comparable to EDI transactions. KPMG Consulting monitored the Verizon NJ GUI check for response postings. Postings were analyzed for accuracy, completeness and appropriateness, with follow-up actions taken as required.

For the Verizon NJ GUI, information (e.g. date, timestamp) pertaining to the submissions and response postings was captured by KPMG Consulting. Verizon NJ does not provide date and timestamps on pre-order responses returned within the GUI.

KPMG Consulting submitted stand-alone pre-orders and orders to evaluate Verizon NJ system functionality. When necessary, pre-orders were submitted to obtain information to validate customer information or to provide required data for a subsequent LSR.

KPMG Consulting actively tracked the progress and status of submitted pre-orders and orders. Error responses were researched (either internally or by contacting the Verizon NJ Help Desk), corrected, and re-submitted as appropriate. KPMG Consulting also investigated missing, late, and/or incorrect responses.

KPMG Consulting derived GUI ordering system availability for the time of active testing (in hours and minutes) for the period of September 21, 2000 through January 8, 2001. The total amount of time that KPMG Consulting experienced system unavailability was subtracted from the total testing time. This result was then divided by the sum total time of active testing during the September 21, 2000 through January 8, 2001 period, and was then expressed as a percentage. KPMG Consulting also reviewed Verizon NJ system outage notices comparing reported outages to our experience for accuracy and consistency. GUI Pre-Order system availability was calculated in the same manner. Pre-Order system availability was tested from September 20, 2000 through December 23, 2000.

2.6 Analysis Methods

The POP Functional Evaluation (TVV1) included a checklist of evaluation criteria developed by KPMG Consulting during the initial phase of the Verizon NJ OSS Evaluation. These evaluation criteria provided the framework of norms, standards, and guidelines for the POP Functional Evaluation (TVV1).

The data collected were analyzed employing the evaluation criteria referenced in Section 3.1 below.

Results in the POP Functional Evaluation (TVV1) are intended to reflect the KPMG Consulting/CLEC experience. The Metrics Calculations and Reporting Verification and Validation Review (PMR3) evaluated Verizon NJ's actual metrics calculations based on the definitions in the New Jersey Carrier-to-Carrier Guidelines Performance Standards and Reports issued in May 2000.

Where applicable, results were calculated based on KPMG Consulting's external timestamps (e.g. the TTG for EDI transactions) or other data points provided in transaction responses from Verizon NJ. KPMG Consulting measures the CLEC end-to-end response time while Verizon NJ measures processing time within their environment. For those POP Functional Evaluation (TVV1) criteria that do not map to the measurement points defined in the Carrier-to-Carrier metrics, KPMG Consulting reviewed results based on our assessment of potential CLEC impact. Therefore, the KPMG Consulting results are expected to differ somewhat from the measurement points reported by Verizon NJ in the Carrier-to-Carrier Guidelines.

3.0 Results

This section identifies the evaluation criteria and test results.

3.1 Results Summary

The results of this test are presented in Table 1-5 below.

Table 1-5: TVV1 Evaluation Criteria and Results

Test Reference	Evaluation Criteria	Result	Comments
Interface Availability:			
TVV1-1-1	EDI pre-order and order capability is consistently available during scheduled hours of operation.	Satisfied	Based on KPMG Consulting's experience from September 15, 2000 through March 16, 2001, the pre-order EDI interface and associated backend systems were available 99.23% of Prime Time and 100% of Non-Prime Time. Verizon NJ EDI order interface was available 99.76% of Prime Time and 100% of Non-Prime Time.[2]
TVV1-1-2	GUI pre-order and order capability is consistently available during scheduled hours of operation.	Satisfied	Based on KPMG Consulting's experience from September 20, 2000 through December 23, 2000, the pre-order GUI interface and associated backend systems were available 99.89% of Prime Time and 100% of Non-Prime Time. During the period of September 21, 2000 through January 8, 2001, Verizon NJ GUI order interface and associated backend systems were available 99.97% of Prime Time and 100% of Non-Prime Time.
Presence of Functionality:			
TVV1-2-1	Verizon NJ system or representative provides required pre-order functionality.	Satisfied	Verizon NJ systems and representatives provided documented functionality to process 13 of 13 pre-order transaction types evaluated during the course of the test. (See Table 1-1).
TVV1-2-2	Verizon NJ system or representative provides required order transaction functionality.	Satisfied	Verizon NJ systems and representatives provided appropriate functionality to process the order scenario types evaluated during the course of this test with one exception. (See Tables 1-2, 1-3, 1-4)
Timeliness of Response- Functional Evaluation:			
TVV1-3-1	Verizon NJ system or representative provides timely valid pre-order responses.	Satisfied	The KPMG Consulting pre-order timeliness benchmarks were derived by averaging each pre-order response type plus four seconds. Retail standards were obtained from Verizon NJ EnView simulation data for the period of

[2] Scheduled hours of "Prime Time" available are defined as 6:00AM – 10:00PM ET – Monday through Saturday, excluding Holidays. Scheduled hours of "Non-Prime Time" are defined as 10:00PM to 6:00AM ET – Monday through Saturday, and all day Sunday and Holidays.

Test Reference	Evaluation Criteria	Result	Comments
			September 2000 through February 2001 inclusively. Average response time for ADR-Address Validation, ADR-TN selection, CSRs, DDAs and LXRs were within the associated benchmarks. ◆ Average response time for PSA was 12.43 seconds, which exceeded the associated benchmark of 9.48 seconds. ◆ After the execution of the POP Functional Evaluation Test (TVV1), Verizon NJ revamped the retail processing of PSA inquiries to be consistent with wholesale inquiries. The change became effective February 2001. o The retail value for EDI PSA inquires for April 2001 reported in the Carrier-to-Carrier Guidelines standard was 10.28 seconds yielding a wholesale guideline of 14.28 seconds. o The average response time observed by KPMG Consulting for PSA pre-orders submitted after Verizon's retail process changes was 12.84 seconds. ◆ Verizon NJ retail analog data was not available for all pre-order inquiry types. ◆ For those pre-orders not evaluated against Verizon NJ retail data, please see Table 1-6 and Figure 1-1 for additional detail on pre-order response time.
TVV1-3-2	Verizon NJ system or representative provides timely pre-order system error messages responses.	Satisfied	The KPMG Consulting pre-order error message timeliness benchmark was derived by averaging the retail standard of error message response time plus four seconds. Retail standards were obtained from Verizon NJ EnView simulation data for the period of September 2000 through February 2001 inclusively. The KPMG Consulting benchmark equates to 4.23 seconds.

Test Reference	Evaluation Criteria	Result	Comments
			Average response time for error messages was 4.02 seconds, which is within the associated benchmark of 4.23 seconds. See Table 1-7 for additional details on erred pre-order response time.
TVV1-3-3	Verizon NJ system provides timely Functional Acknowledgements (FAs).	Satisfied	100% of 2615 KPMG Consulting EDI orders received Functional Acknowledgements (FAs)[3]. These results are inclusive of the additional Line Sharing orders. FAs were received in an average time of six seconds. See Table 1-8 for additional details.
TVV1-3-4	Verizon NJ system or representative provides timely Local Service Request Local Response (LSRLRs)/Local Service Confirmation (LSCs) in response to flow-through (FT) LSRs.	Satisfied	The standard for LSRLR/LSC timeliness in the New Jersey Carrier-to-Carrier Guidelines is 95% of FT orders within two hours. 98.45% of 386 FT LSRLRs/ LSCs were returned within 2 hours See Table 1-9a for additional details.
TVV1-3-5	Verizon NJ system or representative provides timely Local Service Request Local Responses (LSRLRs)/Local Service Confirmation (LSCs) in response to non flow-through LSRs.	Satisfied	The standard for LSRLR/LSC timeliness in the New Jersey Carrier-to-Carrier Guidelines is 95% of NFT orders within two hours. 95.85% of 1325 NFT LSRLRs/LSCs were returned within the required time period. These results are inclusive of the additional Line Sharing orders. See Tables 1-9b and 1-15 for additional details.
TVV1-3-6	Verizon NJ system or representative provides timely Error Messages (ERRs) in response to flow-through LSRs.	Satisfied	The standard for ERR timeliness in the New Jersey Carrier-to-Carrier Guidelines is 95% of FT orders within two hours. 98.92% of 186 FT ERRs were received within 2 hours. See Table 1-9a for additional details.
TVV1-3-7	Verizon NJ system or representative provides timely Error Messages (ERRs) in response to non flow-through LSRs.	Satisfied	The standard for ERR timeliness in the New Jersey Carrier-to-Carrier Guidelines is 95% of NFT orders within 24, 48, or 72 hours, depending on service type. 97.68% of 907 NFT ERRs were returned within the required time period. These results are

[3] A Functional Acknowledgement in the GUI is an interim message that is overlaid with the subsequent response. Receipt of GUI Functional Acknowledgements was not captured.

Test Reference	Evaluation Criteria	Result	Comments
			inclusive of the additional Line Sharing orders. See Tables 1-9b and 1-15 for additional details.
TVV1-3-8	Verizon NJ system or representative provides timely Provisioning Completion Messages (PCMs).	Satisfied	It is KPMG Consulting's professional judgment that while compared to a 95% benchmark the results for 24 and 48 hours are statistical failures, there are other means by which the CLECs are able to determine order completion and timeliness experienced does not present a material business impact. See Table 1-10 for additional detail on PCM timeliness.
TVV1-3-9	Verizon NJ system or representative provides timely Billing Completion Messages (BCMs).	Satisfied	The standard for BCM timeliness in the New Jersey Carrier-to-Carrier Guidelines is 97% of all BCMs received by noon of the day after receipt of the PCM CD orders. KPMG Consulting's experience: ◆ 96.60%, or 1193 of 1235 expected BCMs were received within 24 hours of the Completion Date within the PCM. ◆ In October 2000, KPMG Consulting brought to the attention of Verizon NJ that KPMG Consulting was receiving late BCMs. Verizon NJ implemented a fix to take effect in the beginning of November. Since the fix, 100% or 315 BCMs were received on time. These results are inclusive of the additional Line Sharing orders. See Table 1-11 for additional detail on BCM timeliness.
Accuracy of Response:			
TVV1-4-1	Verizon NJ system or representative provides clear, accurate and complete pre-order responses.	Satisfied	A sample of 473 pre-order responses was examined for clarity, completeness, and accuracy relative to the Verizon-South Business Rules. Ten of the13 pre-order types tested complied with the Verizon-South Business Rules requirement. In all cases, KPMG Consulting was able to populate, create and submit valid orders based on

Test Reference	Evaluation Criteria	Result	Comments
			information received from those pre-orders. However, KPMG Consulting identified missing fields in the following responses to pre-orders: ◆ Verizon NJ Loop Qualification (LXR) responses omitted the ADSLQUALCD on all LXR pre-orders for residential customers. ◆ Verizon NJ Conversational TN Selection (ADI) omitted the FX field on 13% of the EDI pre-order responses, and the TOS field on 6% of the EDI pre-order responses. ◆ Verizon NJ Installation Status Request (ISR) omitted the ECCKT field on 48% of the EDI pre-order responses The omission of these required fields does not impact a CLEC's ability to submit subsequent orders, as the CLEC would have initially populated the same field on the inquiry.
TVV1-4-2	Verizon NJ system or representative provides clear, accurate and relevant pre-order error messages.	Satisfied	A sample of 196 pre-order error responses was examined for clarity, completeness, and accuracy relative to the Verizon-South Business Rules. The error responses sampled were complete with respect to Verizon-South Business Rules. The error messages were received in response to invalid pre-order requests and generally provided sufficient information to determine the cause of the error. In some cases, KPMG Consulting contacted the Verizon help desk for clarification of the error message and for assistance in rectifying the error.
TVV1-4-3	Verizon NJ system or representative provides clear, accurate and complete Local Service Request Local Response (LSRLRs)/Local Service Confirmation (LSC).	Satisfied	A sample of 205 LSRLRs/LSCs was examined for clarity, accuracy, and completeness relative to the Verizon-South Business Rules. Verizon NJ LSRLRs/LSCs provided clear, accurate, and complete information in accordance with the Verizon-South Business Rules. All of the fields required by the Verizon-South Business Rules were present and the data were populated correctly, with the

Test Reference	Evaluation Criteria	Result	Comments
			exception of confirmations of supplements to cancel orders. These responses consistently left fields required by the Business Rules blank. The CANCL response did not populate 'BI1', 'BAN1', 'LORD', 'SYSTEMID', 'SHELF', 'CHAN/PAIR', and 'CC' fields. The missing information in these fields did not impact the processing of these responses by KPMG Consulting.
TVV1-4-4	Verizon NJ system or representative provides clear, accurate and complete Error Messages (ERRs).	Satisfied	A sample of 76 ERRs was examined to determine compliance with the Verizon South Business Rules. ERRs were received in response to incorrect Local Service Requests. They contained a remarks field that provided information to determine the cause of the error. The ERRs returned by Verizon NJ contained all of the fields and corresponding data required by the Verizon South Business Rules. The Error Code and associated remarks returned within the ERR did not always provide an adequate level of detail to determine the cause of the error. KPMG Consulting found that the order writers, within the Verizon TISOC, impact the comprehensiveness and/or accuracy of the error messages based on experience and/or skill level. In the cases, KPMG Consulting performed additional analysis, and if necessary, contacted the appropriate Verizon NJ help desk in order to correct the error.
TVV1-4-5	Verizon NJ system or representative provides accurate and complete Provisioning Completion Messages (PCMs).	Satisfied	A sample of 160 PCMs was examined to determine compliance with the Verizon-South Business Rules. PCMs received from Verizon NJ provided clear, accurate, but incomplete information in accordance with the Verizon-South Business Rules. The 'CC' field was consistently blank. The omission of this field does not impact a CLEC's ability to process the PCM response as the CLEC has this information prior to order submission and is required to populate this field on the associated LSR for certain

Test Reference	Evaluation Criteria	Result	Comments
			products.
TVV1-4-6	Verizon NJ system or representative provides accurate and complete Billing Completion Messages (BCMs).	Satisfied	A sample of 138 BCMs was examined to determine compliance with the Verizon-South Business Rules. BCMs received from Verizon NJ provided clear, accurate, but incomplete information in accordance with the Verizon-South Business Rules. The 'CC' field was consistently blank. The omission of this field does not impact a CLEC's ability to process the BCM response as the CLEC has this information prior to order submission and is required to populate this field on the associated LSR for certain products.
TVV1-4-7	Provisioning dates identified within Verizon NJ's order confirmations (LSRLR/LSC DD) are consistent with valid desired due date requests (LSR DDD) (e.g., a due date selected in accordance with the product's standard interval, or if appropriate, from the "Smarts Clock" application).	Satisfied	Of 1672 LSRLRs/LSCs: 96.29% of confirmed DDs (due dates) contained within LSRLRs/LSCs met the requested DDDs (desired due dates). See Table 1-12 for additional detail of the comparison between DDDs and DDs.
Pre-Order/Order Integration:			
TVV1-5-1	Pre-Order and Order field names and field formats are compatible.	Satisfied	The information received in response to Due Data Availability, Address Validation / Direct TN Selection, Conversational TN Reservations, Customer Service Record, Directory Listing and Feature and Service Availability inquiries was consistent with the input requirements for corresponding fields on Local Service Requests (LSRs) as required by the Verizon Ordering Business Rules.
Help Desk:			
TVV1-6-1	The information provided by the Verizon NJ Help Desks is accurate.	Satisfied	For assistance with Order and Pre-Order errors, KPMG Consulting requested assistance from three Verizon Help Desks, including the Telecommunications Industry Services Operations Center (TISOC), the GUI Help Desk and the Wholesale Customer Care Center (WCCC). TISOC The TISOC was contacted as the initial

Test Reference	Evaluation Criteria	Result	Comments
			resource for error resolution of submitted orders. The TISOC was also contacted if notification receipts were late or missing. Error resolution involved analysis of the Business Rules and the verification of system/representative generated errors. KPMG Consulting escalated to Tier 2 TISOC representatives when issues were not resolved. Issues raised with the TISOC resulted in one of the following courses of action: ◆ Verizon system correction ◆ Transfer of the issue to the WCCC ◆ Recommendation that KPMG Consulting resubmit the service request as-is (i.e. no error existed, the transaction was queried by a service representative in error) ◆ Recommendation that KPMG Consulting resubmit the service request with a correction During the course of testing, KPMG Consulting raised 64 issues with the TISOC. See Tables 1-13 and 1-14 for more detailed information on TISOC error resolution GUI Help Desk The GUI Help Desk was used for error resolution and to report KPMG Consulting's inability to access the system through the internet based GUI interface. GUI System unavailability and slow responses were reported by KPMG Consulting. These issues were investigated and resulted in a call back and/or the issuance of a Flash Announcement advising of system issues and resolutions. During the Production Test, KPMG Consulting monitored the Flash Announcements pertaining to GUI outages and slow responses. During the course of testing, KPMG Consulting identified 6 Web GUI outage periods and 5 slow response periods. WCCC The WCCC was used for escalations

Test Reference	Evaluation Criteria	Result	Comments
			beyond the TISOC and for general system failures and errors. TISOC escalations were required if recommended corrections by the TISOC failed or did not match the requirements of the Business Rules. WCCC recommended the following: ◆ Verizon system correction, followed by resubmission of the transaction by KPMG Consulting ◆ KPMG Consulting resubmit the service request as-is (in this case, errors were the result of TISOC representative error) ◆ KPMG Consulting resubmit the service request with a correction The WCCC issued Trouble Tickets as a tracking mechanism. The WCCC monitored the Trouble Tickets and provided daily update by telephone to the KPMG Consulting Help Desk on 95% of the open tickets. There were 39 trouble tickets generated during testing. See Tables 1-13 and 1-14 for more detailed information on WCCC error resolution. Reporting an error through the WCCC would, a majority of the time, result in recommended solutions by the WCCC. On several occasions KPMG Consulting requested escalations to the account manager.
Documentation:			
TVV1-7-1	Documentation used during the course of the evaluation was clear and accurate.	Satisfied	KPMG Consulting used publicly available documentation to conduct the POP Functional Evaluation (TVV1) test. This included the Verizon-South LSOG4 pre-order business rules and Verizon-South LSOG4 Order Business Rules and Verizon Product Interval Guides for Resale and UNE. Overall KPMG Consulting found the documentation clear and accurate. When documentation issues were identified, KPMG Consulting contacted the Verizon NJ help desks. Verizon NJ investigated the issues and, if required, published a change to the documentation in the next release.

Test Reference	Evaluation Criteria	Result	Comments
Line-Sharing:			
TVV1-8-1	Verizon NJ system or representative provides timely Local Service Request Local Responses (LSRLRs)/Local Service Confirmation (LSCs) in response non flow-through (NFT) LSRs for Line Sharing services.	Satisfied	The standard for Line Sharing LSRLR/LSC timeliness in the New Jersey Carrier-to-Carrier Guidelines is 95% of NFT orders within 24, 48 or 72 hours, depending on service type. 100% of 50 NFT LSRLRs/LSCs were returned within the required time period. See Table 1-15 for further details.
TVV1-8-2	Verizon NJ system or representative provides timely Error Messages (ERRs) in response to non flow-through (NFT) LSRs.	Satisfied	The standard for Line Sharing ERR timeliness in the New Jersey Carrier-to-Carrier Guidelines is 95% of NFT orders within 24, 48, or 72 hours, depending on service type. 100% of 15 NFT ERRs were returned within the required time period. Note that KPMG Consulting experienced a single FT ERR associated with a Line Sharing order. Although the order itself was not expected to flow-through, a “hard error” was returned. Verizon reports hard errors as FT transactions. This ERR response was received within 2 hours. See Table 1-15 for further details.

3.2 Additional Data

Table 1-6: Pre-Order Valid Response Timeliness (Functional Evaluation)

Query Type	Number of Valid Responses	Range of Response Time (in seconds)			Average Response Time (in seconds)		% Within Benchmark
		Min	Max	Median	Benchmark	KPMG Consulting	
ADI	12	2	47	6	N/A	10.5	N/A
ADR (Address Validation)	244	2	14	4	9.87	6.00	97.95%
ADR (TN Selection)	587	3	47	5	4.86	4.13	90.12%
CSR	287	1	18	3	4.5	3.11	97.21%
DDA	320	3	28	4	6.98	4.88	83.75%
DLR	8	2	6	5	N/A	4.13	N/A
ISR	27	2	6	3	N/A	3.63	N/A
LQB	142	3	48	9	N/A	10.7	N/A
LXR	229	2	17	3	12.92	3.66	100%
PSA (pre 02/2001 retail definition)	161	10	50	12	9.48	12.43	0%
PSA (post 02/2001 retail definition)	43	10	20	12	14.28	12.84	86.05%
SOR	11	6	58	15	N/A	18.64	N/A
TR1	10	3	18	4	N/A	5.7	N/A
TR3	162	3	15	3	N/A	3.51	N/A
TR5	146	2	36	3	N/A	3.4	N/A
Total	2346	1	58				

Notes:

1. Per the Carrier-to-Carrier Guidelines, these results exclude "Time Outs", or pre-order queries for which an error message was not returned within 60 seconds.

2. KPMG Consulting Benchmark of average response time is derived from the average of Verizon NJ EnView retail averages in September, October November, December, January and February, plus 4 seconds.

3. N/A = No information about Verizon NJ EnView averages.

4. After the execution of the POP Functional Evaluation Test, Verizon NJ revamped the retail processing of PSA inquiries to be consistent with a wholesale inquiry.

Figure 1-3: PSA Timeliness

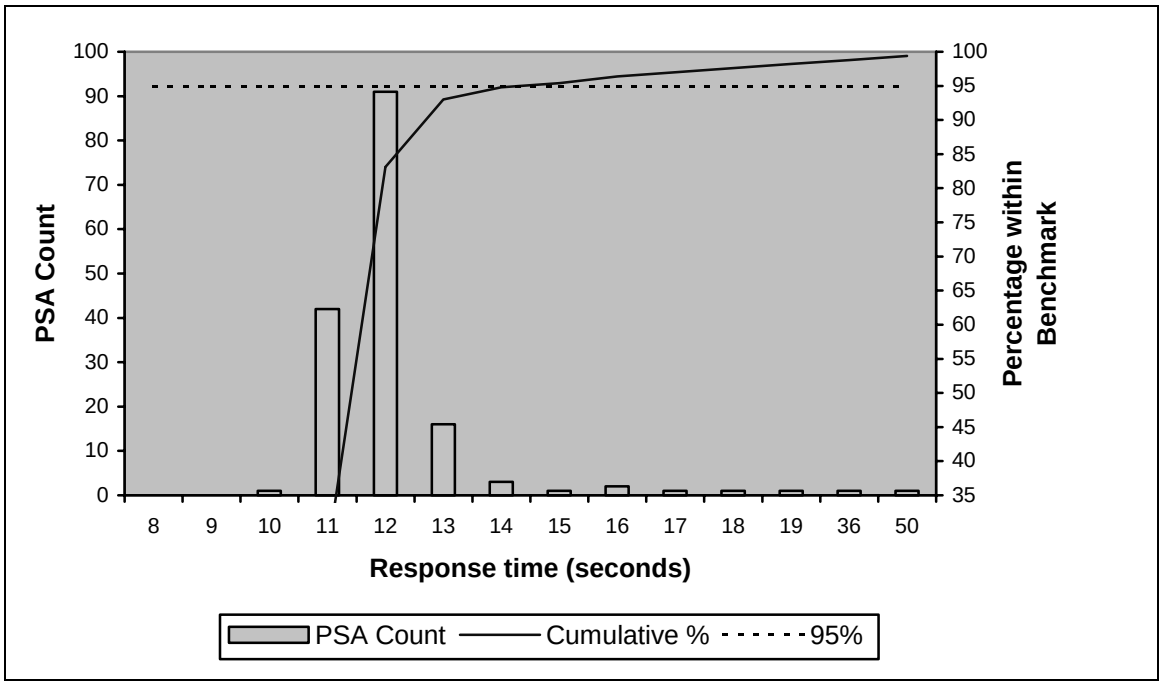

Table 1-7: Pre-Order Erred Response Timeliness (Functional Evaluation)

Query Type	Number of Erred Responses	Range of Response Time (in seconds)			Average Response Time (in seconds)		% Within Benchmark
		Min	Max	Median	Benchmark	KPMG Consulting	
ADI	43	2	10	3	4.23	2.98	86.10%
ADR	25	1	6	2	4.23	2.12	96.00%
CSR	12	2	4	3	4.23	2.58	100.00%
DDA	21	1	5	2	4.23	2.76	90.50%
DLR	42	1	11	3	4.23	3.40	83.40%
ISR	47	1	11	3	4.23	3.19	87.30%
LQB	57	1	41	5	4.23	8.44	50.90%
LXR	15	1	3	2	4.23	1.80	100.00%
PSA	1	2	2	2	4.23	2.00	100.00%
SOR	6	10	16	12	4.23	12.00	0.00%
TR1	5	2	4	2	4.23	2.40	100.00%
TR3	9	2	3	2	4.23	2.22	100.00%
TR5	19	1	3	2	4.23	1.89	100.00%
Total	302	1	41				

Table 1-8: Functional Acknowledgements

Data	Total
Count of FA Received	2615
Max of FA Response Time (Min)	0.28
Min of FA Response Time (Min)	0.05
Average of FA Response Time (Min)	0.09

Table 1-9a: Local Service Request Local Response (LSRLR)/Local Service Confirmation (LSC) and Error Message (ERR) Timeliness (Functional Evaluation) – Flow-Through

		Flow-through	
		LSRLR/LSC	**ERR**
Total	Total responses	386	186
	Total on-time responses	380	184
	% On-time	98.45%	98.92%

Table 1-9b: Local Service Request Local Response (LSRLR)/Local Service Confirmation (LSC) and Error Message (ERR) Timeliness (Functional Evaluation) – Non-Flow-Through

		Non Flow-Through	
		LSRLR/LSC	**ERR**
24 hours (Resale (POTS/Pre-qualified Complex), UNE-L/Pre-qualified complex and UNE-P with less than 10 lines)	Total responses	740	477
	Total On-time Responses	689	465
	% On-time	93.1%[4]	97.4%
48 hours (Resale-Complex and Resale Special Services with less than 10 lines)	Total Responses	132	117
	Total On-time Responses	128	110
	% On-time	96.97%	94%[5]
72 hours (Resale (POTS/Pre-qualified Complex) with greater than or equal to 10 lines)	Total Responses	403	298
	Total On-time Responses	403	296
	% On-time	100%	99.3%
24 hours (Line-Sharing xDSL - Resale (POTS/Pre-qualified Complex), UNE-L/Pre-qualified complex and UNE-P with less than 10 lines)	Total Responses	20	14
	Total On-time Responses	20	14
	% On-time	100%	100%
72 hours (Line-Sharing xDSL - Resale (POTS/Pre-qualified Complex) with greater than or equal to 10 lines)	Total Responses	30	1
	Total On-time Responses	30	1
	% On-time	100%	100%
Overall Total Non- Flow-through Responses	Overall Total Responses	1325	907
	Overall Total On-time	1270	886
	% On-time	95.85%	97.68%

[4] See Figure 1-4 for details pertaining to the timeliness results.
[5] See Figure 1-5 for details pertaining to the timeliness results.

Figure 1-4: LSRLR/LSC NFT Timeliness (24 Hrs.)

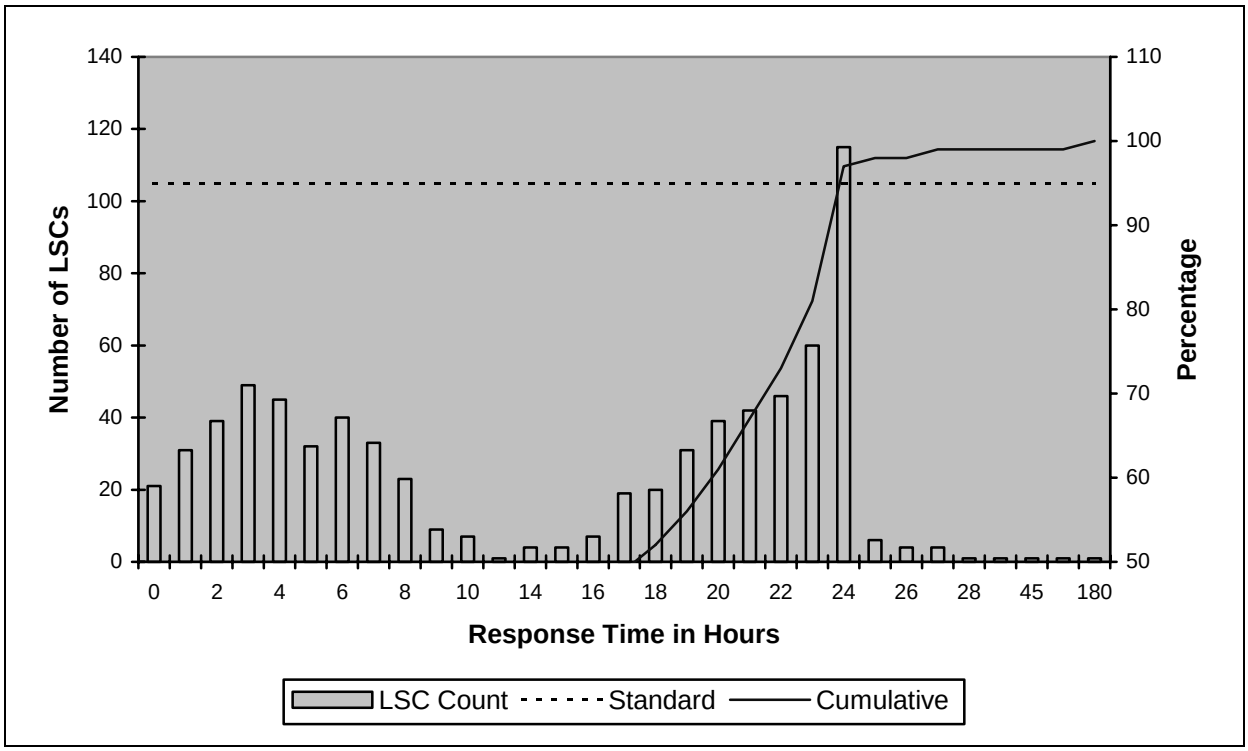

Figure 1-5: SEM NFT Timeliness (48 Hrs.)

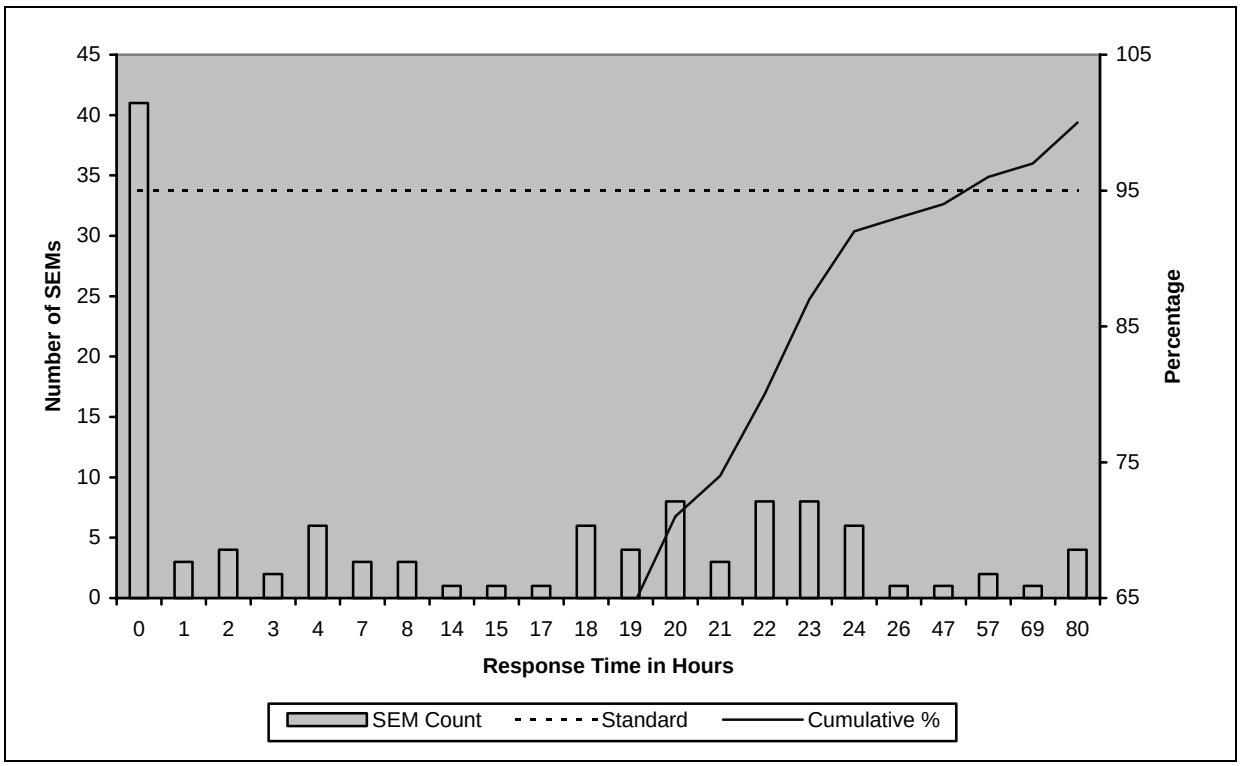

Table 1-10: Provisioning Completion Messages (PCM) Timeliness (Functional Evaluation)

	Count	%
Total PCM Received	1254	
Total PCM Received On PCM CD	1052	83.62%
Total PCM Received Early[6]	5	0.40%
PCM CD minus 2 business day	1	0.08%
PCM CD minus 3 business day	4	0.32%
Total PCM Received Late[7]	201	15.98%
PCM CD plus 1 business day	124	9.86%
PCM CD plus 2 business days	42	3.34%
PCM CD plus 3 business days	17	1.35%
PCM CD plus 4 business days	5	0.40%
PCM CD plus 5 business days	5	0.40%
PCM CD plus more than 6 business days	8	0.64%

Figure 1-6: Provisioning Completion Message (PCM) Timeliness

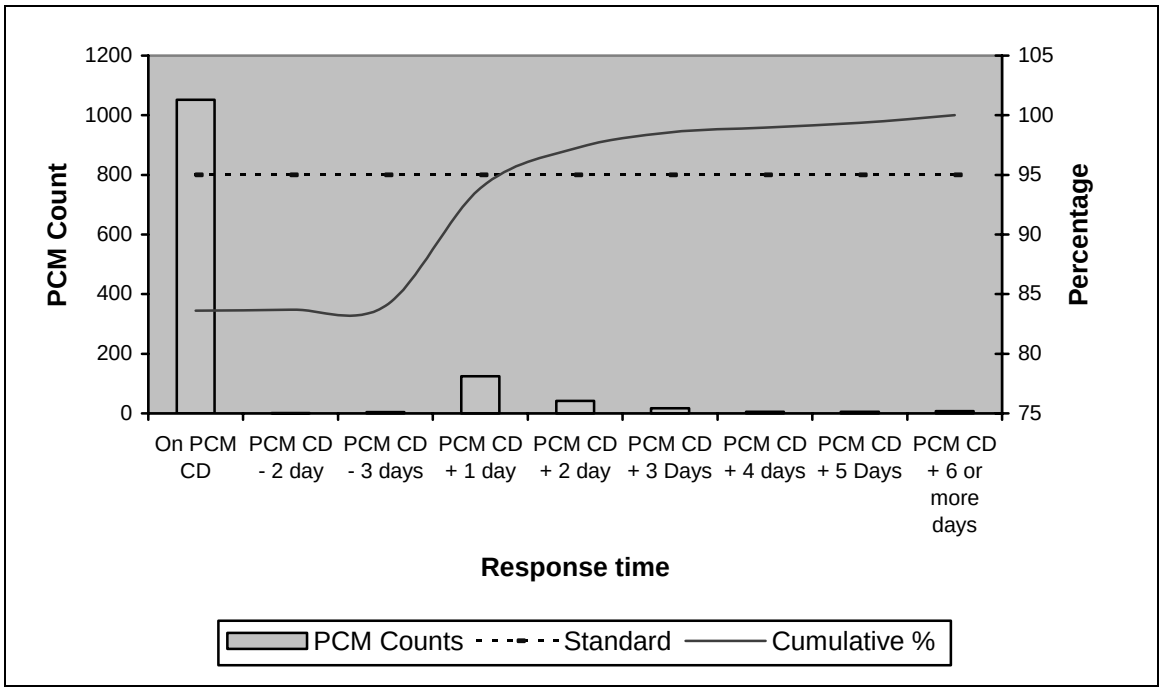

[6] Early PCNs are indicated by the number of business days prior to the Completion Date within the PCN (PCN CD).

[7] Late PCNs are indicated by the number of business days after noon of the next business day of the Completion Date within the PCN (PCN CD).

Table 1-11: Billing Completion Messages (BCM) Timeliness (Functional Evaluation)

	Count	%
Total BCM Received	1235	
Total BCM Received On BCM CD	1193	96.60%
Total BCM Received Late[8]	42	3.40%
BCM CD plus 1 business day	12	0.97%
BCM CD plus 2 business days	11	0.89%
BCM CD plus 3 business days	8	0.65%
BCM CD plus 4 business days	4	0.32%
BCM CD plus 5 business days	2	0.16%
BCM CD plus more than 6 business days	5	0.40%

Figure 1-7: Billing Completion Message (BCM) Timeliness

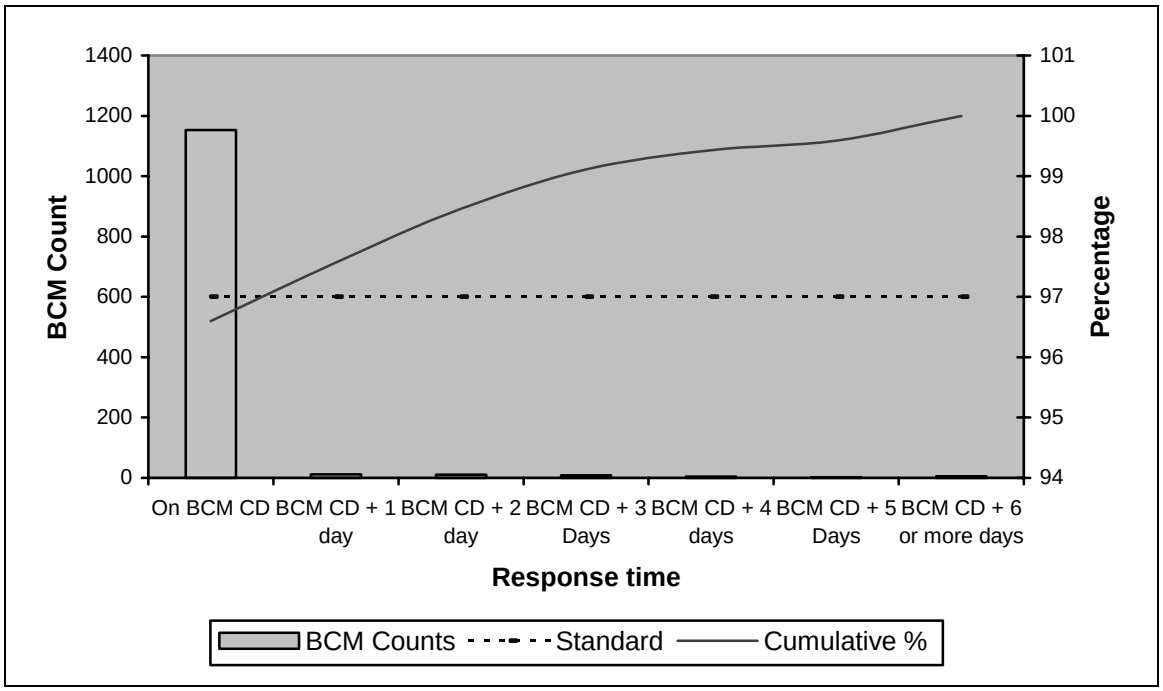

[8] Late BCNs are indicated by the number of business days after noon of the next business day of the Completion Date within the PCM (PCM CD). KPMG Consulting measures the CLEC response time while Verizon NJ measures time within their environment. Therefore, results are expected to differ somewhat from those reported by Verizon NJ C2C Guidelines.

Table 1-12: Comparison between LSR DDD and LSRLR/LSC DD

	Resale (POTS / Pre-Qualified Complex)		**Resale-Complex**		**Resale-Special Services**		**UNE-Complex**		**UNE-L**		**UNE-P**		**UNE-Special Services**		**Total**	
	count	%	count	%	count	%	count	%	count	%	count	%	count	%	count	%
Same	415	99.50%	103	92.78%	58	96.67%	193	95.07%	510	96.05%	261	97.60%	71	86.59%	1611	96.29%
Before DDD by 1 business day	0	0.0%	2	1.82%	0	0.0%	0	0.0%	0	0.0%	1	0.40%	0	0.0%	3	0.18%
Before DDD by 2 business days	0	0.0%	0	0.0%	0	0.0%	0	0.0%	2	0.38%	0	0.0%	0	0.0%	2	0.12%
Before DDD by 3 business days	1	0.24%	3	2.73%	0	0.0%	0	0.0%	1	0.19%	1	0.40%	0	0.0%	6	0.36%
Before DDD by 4 business days	0	0.0%	0	0.0%	0	0.0%	0	0.0%	0	0.0%	0	0.0%	0	0.0%	0	0.0%
Before DDD by 5 business days	0	0.0%	0	0.0%	0	0.0%	0	0.0%	0	0.0%	0	0.0%	0	0.0%	0	0.0%
Before DDD more than 6 business days	1	0.24%	0	0.0%	0	0.0%	0	0.0%	1	0.19%	0	0.0%	1	1.22%	3	0.18%
"Before DD" Summary	2	0.48%	5	4.55%	0	0.0%	0	0.0%	4	0.78%	2	0.80%	1	1.22%	14	0.84%
After DDD by 1 business day	2	0.48%	0	0.0%	0	0.0%	8	3.94%	11	2.07%	1	0.40%	3	3.66%	25	1.49%
After DDD by 2 business days	0	0.0%	0	0.0%	0	0.0%	2	0.99%	1	0.19%	3	1.12%	2	2.44%	8	0.49%
After DDD by 3 business days	0	0.0%	0	0.0%	2	3.33%	0	0.0%	3	0.56%	0	0.0%	2	2.44%	7	0.43%
After DDD by 4 business days	0	0.0%	2	1.82%	0	0.0%	0	0.0%	0	0.0%	0	0.0%	0	0.0%	2	0.12%
After DDD by 5 business days	0	0.0%	0	0.0%	0	0.0%	0	0.0%	1	0.19%	0	0.0%	0	0.0%	1	0.06%
After DDD more than 6 business days	0	0.0%	0	0.0%	0	0.0%	0	0.0%	1	0.19%	0	0.0%	3	3.66%	4	0.24%
"After DD" Summary	2	0.48%	2	1.82%	2	3.33%	10	4.93%	17	3.20%	4	1.60%	10	12.20%	47	2.81%
Different	4	0.94%	7	6.36%	2	3.33%	10	4.93%	21	3.98%	6	2.40%	11	13.41%	61	3.65%

Table 1-13: Help Desk Inquiries Opened

Call Center Called	Number of Days Open	Documentation Error	KPMG Consulting	OTHER	UNKNOWN	Verizon Error		Total
						Human	System	
Web GUI	Same Day						1	1
	>10		1					1
Subtotal (Web GUI)			1				1	2
TISOC	Same Day	2				3	3	8
	1		1			1	1	3
	2		1			2		3
	3						1	1
	5						1	1
	6					1		1
	7	1				1	1	3
	8					1		1
	9	1						1
	>10	8	6	11	2	7	8	42
Subtotal (TISOC)		12	8	11	2	16	15	64
WCCC	Same Day		2				1	3
	1		1	1		2	2	6
	2		1					1
	6					1	1	2
	7		2					2
	8						2	2
	>10		5	2	2	3	11	23
Subtotal (WCCC)			11	3	2	6	17	39
Total		12	20	14	4	22	33	105

Table 1-14: Calls to Help Desk

Call Center Called	Number of Calls	Documentation Error	KPMG Consulting	OTHER	UNKNOWN	Verizon Error		Total
						Human	System	
Web GUI	1						1	1
	2		1					1
Subtotal (Web GUI)			1				1	2
TISOC	1	4	2	2		5	8	21
	2	2	2	1		3	3	11
	3	2	1			2		5
	4	2	1	6		3	2	14
	5	1	1		2		1	5
	6		1	1			1	3
	7			1		1		2
	8					1		1
	9					1		1
	10+	1						1
Subtotal (TISOC)		12	8	11	2	16	15	64
WCCC	1		2		1	1	8	12
	2		5	1		3	2	11
	3		2				2	4
	4					2	2	4
	5		1	1			1	3
	6		1					1
	9						1	1
	10+			1	1		1	3
Subtotal (WCCC)			11	3	2	6	17	39
Total		12	20	14	4	22	33	105

Table 1-15: Local Service Request Local Response (LSRLR) and Error Message (ERR) Timeliness (Functional Evaluation) – Line Sharing

		Non Flow-Through	
		LSRLR/LSC	**ERR**
24 hours (Resale (POTS/Pre-qualified Complex), UNE-L/Pre-qualified complex and UNE-P with less than 10 lines)	Total responses	20	14
	Total on time responses	20	14
	% On time	100%	100%
48 hours (Resale-Complex and Resale Special Services with less than 10 lines)	Total responses	N/A	N/A
	Total on time responses	N/A	N/A
	% On time	N/A	N/A
72 hours (Resale (POTS/Pre-qualified Complex) with greater than or equal to 10 lines)	Total responses	30	1
	Total on time responses	30	1
	% On time	100%	100%
Overall Total Non Flow-Through Responses	Overall Total Responses	50	15
	Overall Total on time	50	15
	% On time	100%	100%

D. Test Results: Pre-Order and Order Volume Performance Test (TVV2)

1.0 Description

The Pre-Order and Order Volume Performance Test (TVV2) was designed to evaluate the relevant systems, processes, and other operational elements associated with the Verizon New Jersey (Verizon NJ) pre-order and order processes. The objective of this test was to validate the performance of the interfaces at projected volumes.

The Volume Performance Test (TVV2) examined Verizon NJ's system responses and timeliness for pre-order and order transactions submitted using the LSOG4 Business Rules. The test used projected transaction volumes for the March 2001 timeframe, simulating normal, peak, and stress volume conditions. The projected transaction volume was determined by analyzing historical CLEC ordering behavior, CLEC forecasts and Verizon NJ forecasts. Orders were transmitted using Verizon NJ's training-mode. In the training-mode, Local Service Requests (LSRs) are deleted from the process flow after service order generation and the process does not continue to provision. The majority of orders transmitted during the test were limited to those that flow-through Verizon NJ's order processing systems without human intervention. The Volume Performance Test (TVV2) included stand alone pre-order and order transactions submitted concurrently with transactions from the Pre-order, Order, and Proisioning (POP) Functional Performance Test (TVV1), that is data returned in a pre-order transaction was not used to populate LSR fields.

KPMG Consulting executed volume testing on October 10, 2000 (Normal-Day), October 12, 2000 (Peak-Day), October 17, 2000 (Normal-Day 2) and October 20, 2000 (Stress-Test).

2.0 Methodology

This section describes the test approach and methodology used to execute the Volume Performance Test (TVV2).

2.1 Business Process Description

The Volume Performance Test (TVV2) employed the same connectivity process used during the POP Functional Evaluation Test (TVV1). Both the EDI and Web GUI interfaces were tested using March 2001 projected volumes[9].

Figure 2-1 provides an overview of the Verizon NJ EDI pre-ordering and ordering process. Figure 2-2 provides a system view of the Web GUI pre-ordering and ordering process.

[9] The total number of transactions submitted during normal volume testing was 36% greater than the average day during March 2001, even though the forcasted volume for the month was approximately 6% less than the total number of transactions processed by Verizon NJ.

Figure 2-1: EDI Pre-Order and Order Process

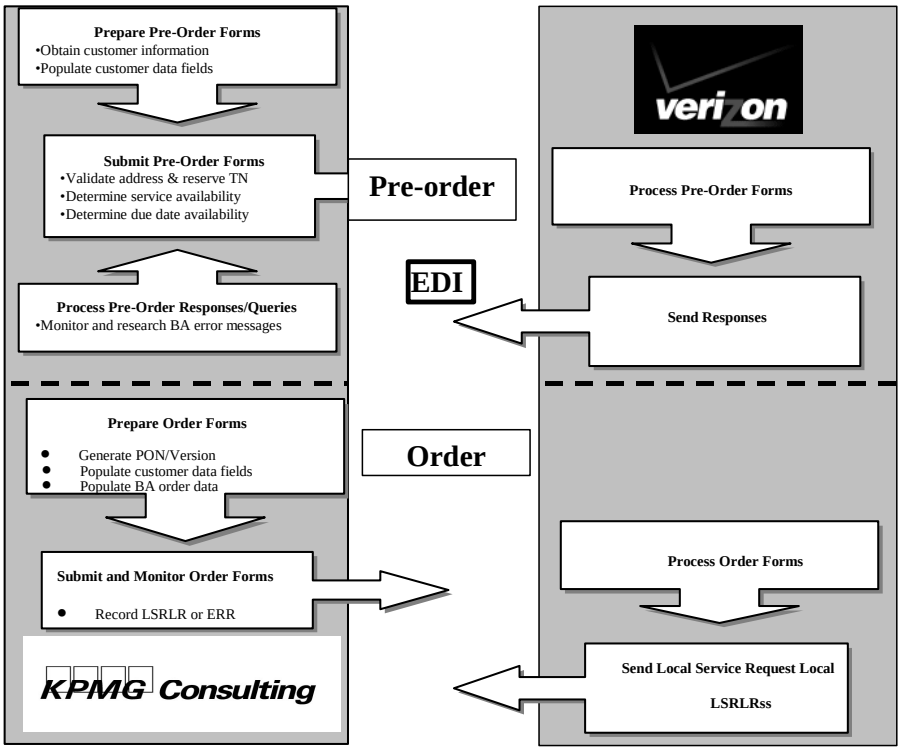

Figure 2-2: Web GUI Volume Performance Test System View

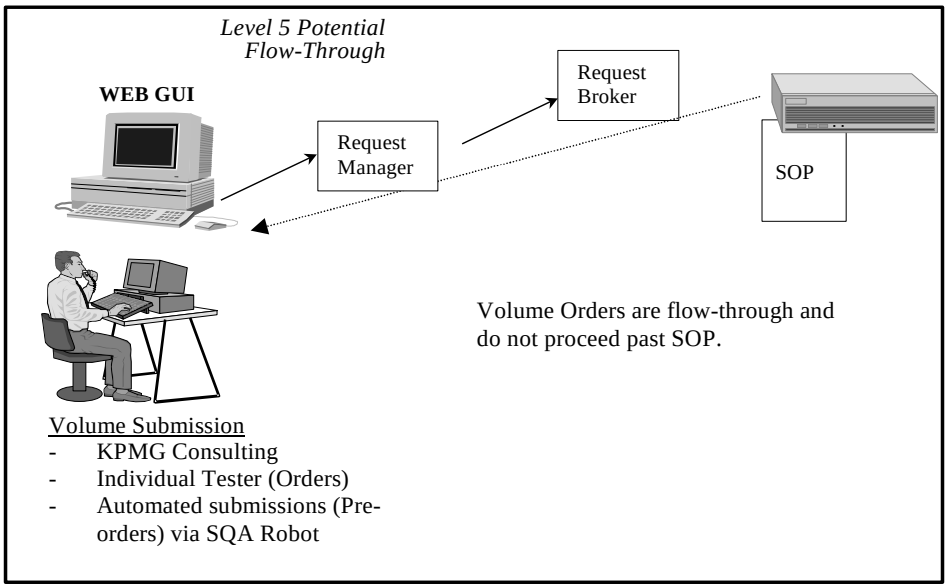

2.2 Scenarios

The following tables list the pre-order and order scenarios used in this test.

Table 2-1: LSOG4 Volume Pre-Order Test Scenarios

Activity	Residence	Business
Obtain Customer Service Records (CSRs)	**X**	**X**
Validate customer address		**X**
Perform directory listing inquiry		**X**
Inquire about feature and service availability	**X**	
Determine if customer's loop qualifies for ISDN	**X**	
Determine if customer's loop is xDSL capable	**X**	
Determine availability of desired due date		**X**

Table 2-2: LSOG 4 Volume Resale Order Test Scenarios

Activity	Res. POTS	Bus. POTS
Migration from Verizon NJ "as is"	**X**	
Feature changes to existing customer	**X**	**X**
Add lines/trunks/ circuits	**X**	
Disconnect (full and partial)	**X**	

Table 2-3: LSOG 4 Volume UNE-Platform Order Test Scenarios

Activity	Res. POTS	Bus. POTS
Migration from Verizon NJ "as is"	**X**	**X**
Feature changes to existing customer		**X**
Migration from Verizon NJ "as specified"	**X**	
Disconnect (full and partial)	**X**	
Convert from Resale to UNE-Platform	**X**	

Table 2-4: LSOG 4 Volume UNE-Loop Order Test Scenarios

Activity	Res. Analog Loop	Bus. Analog Loop
Migration from Verizon NJ "as is"		**X**
Migration from Verizon NJ "as specified"	**X**	

2.3 Test Targets & Measures

The test targets for this test were Verizon NJ's pre-order and order systems, including the EDI and Web GUI interfaces. Included in the test targets were the following processes and sub-processes:

- Submit GUI transactions
  - Submit pre-orders
    - Send pre-order transaction
    - Verify receipt of pre-order response
    - Verify receipt of pre-order error response
    - Receive match response
  - Submit orders
    - Transmit Local Service Request
    - Receive acknowledgment
    - Receive confirmation of request (LSRLR/LSC), error/reject response (ERR)
    - Verify receipt of response.
  - Submit errors
    - Send error in order or pre-order transaction
    - Receive acknowledgement of request
    - Receive planned error/reject response (ERR) and verify receipt of response.
- Submit EDI transactions
  - Submit pre-orders
    - Send pre-order transaction
    - Verify receipt of pre-order response
    - Verify receipt of pre-order error response
    - Receive match response
  - Submit orders
    - Transmit Local Service Request
    - Receive acknowledgment
    - Receive confirmation of request (LSRLR/LSC), error/reject response (ERR)
    - Verify receipt of response.
  - Submit errors
    - Send error in order or pre-order transaction
    - Receive acknowledgement of request
    - Receive planned error/reject response (ERR) and verify receipt of response.

2.4 Data Sources

The data collected for the test included the Bell Atlantic Resale and CLEC Handbooks, the Verizon EDI user guides for pre-order inquiry and orders, the Verizon Pre-Order Rules, the Verizon South Order Business Rules. Also collected were CLEC and ILEC transaction forecasts, and historical order, and pre-order volumes.

2.4.1 Data Generation/Volumes

KPMG Consulting projected transaction volume levels for March 2001 based on historical volumes and trends, CLEC forecasts and Verizon NJ forecasts. Volumes submitted on the normal-day were determined from this projection. Peak-day transactions were submitted on a graduated schedule, beginning at 125% of the normal-day's hourly submission rates, rising to 150% during the peak hours of the day (2 p.m. to 6 p.m.).

The Stress-test covered a four hour period. Stress-test hourly volumes were derived from the normal-day schedule. The hourly submissions from the normal-day schedule with the highest volumes covering four consecutive hours were used as the baseline. KPMG Consulting then transmitted 150% of the first hour's normal-day transaction count, 200% of the second hour's transaction count, 225% of the third hour's transaction count and 250% of the fourth hour's transaction count respectively.

2.5 Evaluation Methods

Pre-order and order scenarios tested in TVV2 were drawn from the scenarios defined in Appendix A of the Master Test Plan. The scenarios outline, at a high level, the specific products and services to be ordered and activity types to be requested. Using these test scenario descriptions, KPMG Consulting developed test cases for each scenario. The test cases contain a detailed description of the order to be executed, defining, for example, customer types (business or residential), migration activity (partial or full migration[10]), and flow-through designations.

Each test case was then used to generate distinct instances of pre-order and order transactions. Verizon NJ provided test bed accounts against which pre-order and order transactions were placed. The pre-order and order transaction scenarios and test cases represented a range of service families (e.g., POTS) executed against a variety of service delivery methods (e.g. Resale, UNE-P, UNE-Loop) and activity types, (e.g. Migration as-is, Migration as specified).

Both EDI and Web GUI transaction responses were evaluated for consistency with the pre-order and order business process flow, as described in Section 2.1. KPMG Consulting evaluated the presence and timeliness of responses for all interfaces.

2.5.1 Volume Performance Test

KPMG Consulting submitted pre-order and order transactions over a four-day period. Normal test days were conducted on October 10, 2000 and October 17, 2000, a peak-day was conducted on October 12, 2000 and a stress-test was conducted on October 20, 2000. Transactions were analyzed for trends relative to time of day, service delivery method, and product family. KPMG Consulting collected and evaluated the timestamps associated with outgoing EDI and Web GUI pre-order and order submissions, as well as, the time stamps associated with incoming EDI and Web GUI responses.

[10] A full migration converts all of a customer's lines to a new service provider. A partial migration retains at least one-line with Verizon NJ and converts some lines to a CLEC.

The Verizon NJ training mode was used to allow multiple orders for the same account to be sent without exhausting the test bed. Training mode uses specific company code identifiers that can be trapped by Verizon's systems and block from being provisioned. The majority of orders transmitted were flow-through orders, requiring no human intervention by Verizon NJ. In addition, a limited number of non-flow-through transactions were sent in training mode. These orders were a combination of order types not expected to flow-through and intentional errors.

The Volume Performance test was conducted in the following three phases:

1). Two normal-days were run using projected normal daily volumes. EDI transactions were submitted over a 24-hour period. Web GUI transactions were submitted between the hours of 10:00 a.m. and 7:00 p.m. KPMG Consulting made provisions for Service Order Processor (SOP) downtime. Any orders (LSRs) submitted during SOP downtime (10:00 a.m. to 6:00 a.m. weekdays)[11] were expected to receive a LSRLR or Error Message (ERR) within 2 hours after 6:00 a.m. For example, an LSR submitted at 1:00 a.m. was expected to receive a LSRLR or ERR on or before 8:00 a.m.

2). Peak-day, using volumes up to 150% of the normal-day volume test, was run over one 24-hour period. Web GUI transactions were submitted during the hours of 10:00 a.m. and 7:00 p.m.

3). A Stress-test, using volumes increasing from 150% to 250% of the normal-day's four consecutive highest volume hours, was run over a single four-hour period (2:00 p.m. to 6:00 p.m.)

All test days used the same set of test cases. A limited number of pre-order and order transactions were submitted with error conditions to test how Verizon NJ's systems handled such transactions under increased volume conditions.

For each volume day, the planned pre-order and order transactions were distributed throughout the testing window based on Verizon NJ's reported hourly order distribution. Each transaction was then assigned an interface (EDI or Web GUI) through which it was to be submitted. Of the total transactions, 85% were submitted through EDI and 15% through the Web GUI. Product delivery types (e.g. UNE-P) as well as pre-order request types were distributed in accordance with forecasts.

As pre-order and order volume transactions were submitted, positive confirmations or error messages were returned and recorded. A transaction was deemed complete if one of the following was received: a pre-order response, an order confirmation (LSRLR or LSC), or an error message.

2.6 Analysis Methods

The Pre-Order and Order Volume Performance Test (TVV2) included evaluation criteria developed by KPMG Consulting during the initial phase of the Verizon NJ OSS Evaluation. These evaluation criteria provided the framework of norms, standards and guidelines for the Pre-Order and Order Volume Performance Test (TVV2) evaluation. The data collected were analyzed employing these evaluation criteria.

[11] Per the New Jersey Carrier-to-Carrier Guidelines Performance Standards and Reports.

The POP Volume Performance Test (TVV2) evaluation results are intended to reflect the KPMG Consulting-CLEC experience. The Metrics Calculation and Reporting Verification and Validation Review (PMR3) evaluated Verizon NJ's actual metrics calculations based on the definitions in the New Jersey Carrier-to-Carrier Guidelines Performance Standards and Reports issued on May 2000.

Results in Section 3.0 were calculated based on KPMG Consulting's external timestamps or other data points provided in transaction responses from Verizon NJ. These time stamps are expected to differ in varying degrees from the measurement points reported by Verizon NJ in the Carrier-to-Carrier Guidelines. KPMG Consulting measures the CLEC end-to-end response time while Verizon NJ measures processing time within their environment. For those Pre-Order and Order Volume Performance Test (TVV2) evaluation criteria that do not map to the measurement points defined in the Carrier-to-Carrier metrics, KPMG Consulting assessed results based on an evaluation of potential CLEC impact.

3.0 Results

This section identifies the evaluation criteria and test results.

3.1 Results Summary

The results of the Pre-Order and Order Volume Performance Test (TVV2) are presented in the table below.

Table 2-5: Evaluation Criteria and Results

Test Reference	Evaluation Criteria	Result	Comments
Presence of Functionality – Web GUI Volume Performance Test			
TVV2-1-1	Verizon NJ system or representative provides responses to all transactions.	Satisfied	Results received during the four volume test days are: 98.7% of the 5,559 pre-orders submitted received the expected response. 96.8% of the 2,439 LSRs submitted expecting a response received an appropriate and valid response.[12] Note: An expected response could be a valid pre-order response, a LSRLR, or an error message. See Table 2-1 for preorder transaction types submitted during the Volume Test and Table 2-2 through 2-4 for order transaction types submitted during the Volume Test. See Table 2-11 through 2-15 and Table 2-17 for the variety or orders submitted and the responses received during the Volume Test.

[12] Total submissions included FT eligible, NFT eligible, and planned errors. Valid responses to LSRs expected to flow-through or receive an error message were a LSRLR or SEM respectively.

Test Reference	Evaluation Criteria	Result	Comments
TVV2-1-2	Verizon NJ system or representative provides required pre-order functionality.	Satisfied	Verizon NJ systems or representatives provided appropriate functionality to process the pre-order transaction types evaluated during the course of this test. See Table 2-1for pre-order transaction types submitted during the Volume Test
TVV2-1-3	Verizon NJ system or representative provides required order transaction functionality.	Satisfied	Verizon NJ systems or representatives provided appropriate functionality to process the order transaction types evaluated during the course of this test. See Tables 2-2 through 2-4 for detailed results for order transaction types submitted during the Volume Test.
Presence of Functionality – EDI Volume Performance Test			
TVV2-2-1	Verizon NJ system or representative provides responses to all transactions.	Satisfied	Results received during the four volume test days are: 100% of 37,897 pre-orders submitted received the expected response. 100% of 14,918 LSRs submitted received Functional Acknowledgements 98.5% of 14,066 LSRs submitted expecting a response received an appropriate and valid response.[13] See Table 2-1 for preorder transaction types submitted during the Volume Test and Table 2-2 through 2-4 for order transaction types submitted during the Volume Test. See Table 2-6 through 2-10 and Table 2-16 for detailed results the variety or orders submitted and the responses received during the Volume Test..
TVV2-2-2	Verizon NJ system or representative provides required pre-order functionality.	Satisfied	Verizon NJ systems provided required functionality to process the pre-order transaction types evaluated during the course of this test. See Table 2-1 for pre-order transaction types submitted during the Volume Test.
TVV2-2-3	Verizon NJ system or representative provides required order transaction functionality.	Satisfied	Verizon NJ systems provided required functionality to process the order transaction types evaluated during the course of this test. See Tables 2-2 through 2-4 for detailed

[13] Total submissions included FT eligible, NFT eligible, and planned errors. Valid responses to LSRs expected to flow-through or receive an error message were a LSRLR or SEM respectively.

Test Reference	Evaluation Criteria	Result	Comments
			results for order transaction types submitted during the Volume Test.
Timeliness of Response – GUI Volume Performance Test			
TVV2-3-1	Verizon NJ system or representative provides timely Address Validation pre-order responses (ADR).	Satisfied	The ADR pre-order timeliness benchmark was derived from retail standards, as published in the Verizon NJ EnView simulation data. The Web GUI standard, contained in the New Jersey Carrier-to-Carrier Guidelines, for ADR pre-orders is parity with retail plus seven seconds. The retail value for Web GUI ADR inquiries for October 2000 reported in the Carrier-to-Carrier Guidelines was 6.30 seconds yielding a wholesale guideline of 13.30 seconds. The average response time observed by KPMG Consulting for ADRs was 8.07 seconds over the four volume days.
TVV2-3-2	Verizon NJ system or representative provides timely Customer Service Record (CSR) pre-order responses.	Satisfied	The CSR pre-order timeliness benchmark was derived from retail standards, as published in the Verizon NJ EnView simulation data. The Web GUI standard, contained in the New Jersey Carrier-to-Carrier Guidelines, for CSR pre-orders is parity with retail plus seven seconds. The retail value for Web GUI CSR inquires for October 2000 reported in the Carrier-to-Carrier Guidelines was 0.53 seconds yielding a wholesale guideline of 7.53 seconds. The average response time observed by KPMG Consulting for CSR was 5.52 seconds over the four volume days.
TVV2-3-3	Verizon NJ system or representative provides timely xDSL Loop Qualification pre-order responses (LXR).	Satisfied	The LXR pre-order timeliness benchmark was derived from retail standards, as published in the Verizon NJ EnView simulation data. The Web GUI standard, contained in the New Jersey Carrier-to-Carrier Guidelines, for LXR pre-orders is parity with retail plus seven seconds. The retail value for Web GUI LXR inquires for October 2000 reported in the Carrier-to-Carrier Guidelines was 6.33 seconds yielding a wholesale guideline of 13.33 seconds. The average response time observed by KPMG Consulting for LXRs was 5.51 seconds over the four volume days.

Test Reference	Evaluation Criteria	Result	Comments
TVV2-3-4	Verizon NJ system or representative provides timely ISDN Loop Qualification pre-order responses (LQB).	Satisfied	The average response time observed by KPMG Consulting for LQBs was 13.38 seconds over the four volume days.
TVV2-3-5	Verizon NJ system or representative provides timely Directory Listing Request responses (DLR).	Satisfied	The average response time observed by KPMG Consulting for DLRs was 7.38 seconds over the four volume days.
TVV2-3-6	Verizon NJ system or representative provides timely Local Service Confirmation (LSC) in response to Flow-Through (FT) LSRs.	Satisfied	The standard, found in the New Jersey Carrier-to-Carrier Guidelines for LSC timelines is 95% of responses should be returned within 2 hours of transmitting an LSR via the GUI. FT eligible LSRs submitted via the GUI during volume testing that received an LSC yielded the following timeliness results: 95.6% of 2,306 order transactions received a valid LSCs within 2 hours. Average response time for LSCs was 20.56 minutes.
Timeliness of Response – EDI Volume Performance Test			
TVV2-4-1	Verizon NJ system or representative provides timely Address Validation Inquiry pre-order responses (ADR).	Satisfied	The ADR pre-order timeliness benchmark was derived from retail standards, as published in the Verizon NJ EnView simulation data. The EDI standard, contained in the New Jersey Carrier-to-Carrier Guidelines, for ADR pre-orders is parity with retail plus four seconds. The retail value for EDI ADR inquires for October 2000 reported in the Carrier-to-Carrier Guidelines was 6.30 seconds yielding a wholesale guideline of 10.30 seconds. The average response time observed by KPMG Consulting for ADRs was 3.74 seconds over the four volume days.
TVV2-4-2	Verizon NJ system or representative provides timely parsed CSR pre-order responses.	Satisfied	The parsed CSR pre-order timeliness benchmark was derived from retail standards, as published in the VerizonNJ EnView simulation data. The EDI standard, contained in the New Jersey Carrier-to-Carrier Guidelines, for parsed CSR pre-orders is parity with retail plus ten seconds. The retail value for EDI CSR inquiries for October 2000 reported in the Carrier-to-Carrier Guidelines was 0.54 seconds yielding

Test Reference	Evaluation Criteria	Result	Comments
			a wholesale guideline of 10.54 seconds. The average response time observed by KPMG Consulting for parsed CSRs was 5.34 seconds over the four volume days.
TVV2-4-3	Verizon NJ system or representative provides timely Due Date Availability pre-order responses (DDA).	Satisfied	The DDA pre-order timeliness benchmark was derived from retail standards, as published in the Verizon NJ EnView simulation data. The EDI standard, contained in the New Jersey Carrier-to-Carrier Guidelines, for DDA pre-orders is parity with retail plus four seconds. The retail value for EDI DDA inquires for October 2000 reported in the Carrier-to-Carrier Guidelines was 2.56 seconds yielding a wholesale guideline of 6.56 seconds. The average response time observed by KPMG Consulting for DDAs was 2.04 seconds over the four volume days.
TVV2-4-4	Verizon NJ system or representative provides timely LXR pre-order responses.	Satisfied	The LXR pre-order timeliness benchmark was derived from retail standards, as published in the Verizon NJ EnView simulation data. The EDI standard, contained in the New Jersey Carrier-to-Carrier Guidelines, for LXR pre-orders is parity with retail plus four seconds. The retail value for EDI LXR inquiries for October 2000 reported in the Carrier-to-Carrier Guidelines was 6.33 seconds yielding a wholesale guideline of 10.33 seconds. The average response time observed by KPMG Consulting for LXRs was 3.38 seconds over the four volume days.
TVV2-4-5	Verizon NJ system or representative provides timely Features and Service Availability (PSA) pre-order responses.	Satisfied	The EDI standard, contained in the New Jersey Carrier-to-Carrier Guidelines, for PSA pre-orders is parity with retail plus four seconds. After the execution of the Pre-Order and Order Volume Performance Test (TVV2), Verizon NJ modified the retail processing of PSA inquiries to be consistent with wholesale inquirires. KPMG Consulting could not obtain retail PSA timeliness data for the month of October 2000. The PSA pre-order timeliness benchmark was derived from retail standards, as published in the Verizon NJ EnView simulation data for the month of April 2001. The retail value for EDI PSA inquires for

Test Reference	Evaluation Criteria	Result	Comments
			April 2001 reported in the Carrier-to-Carrier Guidelines standard was 10.28 seconds yielding a wholesale guideline of 14.28 seconds. The average response time observed by KPMG Consulting for PSA was 12.16 seconds over the four volume days. See Figure 2-3 through 2-6 for additional details.
TVV2-4-6	Verizon NJ system or representative provides timely ISDN Loop Qualification pre-order responses (LQB).	Satisfied	The average response time observed by KPMG Consulting for LQBs was 13.00 seconds over the four volume days.
TVV2-4-7	Verizon NJ system or representative provides timely Directory Listing Request responses (DLR).	Satisfied	The average response time observed by KPMG Consulting for DLRs was 3.26 seconds over the four volume days.
TVV2-4-8	Verizon NJ system or representative provides timely pre-order error messages.	Satisfied	The pre-order error message timeliness benchmark was derived from retail standards, as published in the Verizon NJ EnView simulation data. The EDI standard, contained in the New Jersey Carrier-to-Carrier Guidelines, for pre-order error messages is parity with retail plus four seconds. The retail value for EDI pre-order error messages for October 2000 reported in the Carrier-to-Carrier Guidelines was 0.12 seconds yielding a wholesale guideline of 4.12 seconds. The average response time observed by KPMG Consulting for pre-order error message was 3.11 seconds over the four volume days. See Figure 2-7 to 2-8 for additional detail.
TVV2-4-9	Verizon NJ systems return timely Functional Acknowledgements (FAs).	Satisfied	The standard, found in the New Jersey Carrier-to-Carrier Guidelines for FA timelines is 95% of responses should be returned within 2 hours of transmitting an LSR via EDI. LSRs submitted via GUI during volume testing yielded the following results: 100% of 14,918 FAs were received within 2 hours. The average response time for FAs was 0.17 minutes for the four volume days.

Test Reference	Evaluation Criteria	Result	Comments
TVV2-4-10	Verizon NJ system or representative provides timely Local Service Request Local Response (LSRLRs) in response to flow-through (FT) LSRs.	Satisfied	The standard, found in the New Jersey Carrier-to-Carrier Guidelines for LSRLR timelines is 95% of responses should be returned within 2 hours of transmitting an LSR via EDI. LSRs submitted via EDI during volume testing yielded the following results: 98.4% of the 13,158 order transactions received valid responses within 2 hours. The average response time for LSRLRs was 14.78 minutes.
Help Desk			
TVV2-5-1	The information provided by the Verizon NJ Help Desks is accurate.	Satisfied	See Test Reference TVV1-6-1 in the results section of the POP Functional Evaluation (TVV1) for detailed information on KPMG Consulting's interaction with Verizon help desks. KPMG Consulting's test activities for the POP Volume Performance Test (TVV2) test were conducted prior to Verizon's announcement (May 2001) that the Telecommunications Industry Service Operations Centers (TISOCs) would be re-organized along product lines to provide footprint wide assistance and renamed to National Market Centers (NMCs).

Additional Data

Table 2-6: EDI Pre-Order Response Timeliness: Volume Evaluation

Query Type	Number of Valid Responses	Range of Response Time (Sec)		Average Response Time (Sec)	
		Min	Max	Benchmark	KPMG Consulting
ADR	2,327	2	26	10.30	3.74
Parsed CSR	24,307	2	59	10.54	5.34
DDA	2,781	1	57	6.56	2.04
DLR	2,102	1	56	NA	3.26
LQB	600	3	58	NA	13.00
LXR	2,674	2	34	10.33	3.38
PSA	774	10	24	14.28	12.16
Count	35,565				

Notes:

1. Per the New Jersey Carrier-to-Carrier Guidelines, a "valid response" excludes "Time Outs" or pre-order queries for which a response was not returned within 60 seconds.
2. The KPMG Benchmark of average response time is derived from the average of Verizon NJ EnView retail averages for the month of October, plus four seconds. For Parsed CSRs, the benchmark is derived from the average of Verizon NJ EnView retail averages on the test day, plus ten seconds. For PSA the benchmark is from the April 2001 Verizon NJ EnView retail averages plus 4 seconds.
3. N/A = There is no standard identified in the New Jersey Carrier-to-Carrier Guidelines for these query types.

Table 2-7: Normal Day-1 EDI Pre-Order Response Timeliness: Volume Evaluation

Query Type	Number of Valid Responses	Range of Response Time (Sec)		Average Response Time (Sec)	
		Min	Max	Benchmark	KPMG Consulting
ADR	604	2	19	9.88	3.52
Parsed CSR	5,863	2	59	10.66	5.32
DDA	714	1	6	6.47	1.88
DLR	503	1	15	N/A	3.04
LQB	167	3	43	N/A	10.84
LXR	694	2	11	10.52	3.00
PSA	202	11	22	14.28	11.99
Count	8,747				

Notes:

1. Per the New Jersey Carrier-to-Carrier Guidelines, a "valid response" excludes "Time Outs" or pre-order queries for which a response was not returned within 60 seconds.
2. The KPMG Benchmark of average response time is derived from the average of Verizon NJ EnView retail averages on the test day, plus four seconds. For Parsed CSRs, the benchmark is derived from the average of Verizon NJ EnView retail averages on the test day, plus ten seconds. For PSA the benchmark is from the April 2001 Verizon NJ EnView retail averages plus 4 seconds.
3. N/A = There is no standard identified in the New Jersey Carrier-to-Carrier Guidelines for these query types.

Table 2-8: Normal Day-2 EDI Pre-Order Response Timeliness: Volume Evaluation

Query Type	Number of Valid Responses	Range of Response Time (Sec)		Average Response Time (Sec)	
		Min	Max	Benchmark	KPMG Consulting
ADR	424	2	13	10.77	3.55
Parsed CSR	5,837	3	56	10.49	5.38
DDA	516	1	45	6.73	1.90
DLR	495	1	56	NA	3.17
LQB	59	3	45	NA	14.56
LXR	493	2	11	10.08	3.25
PSA	144	10	20	14.28	12.07
Count	7,968				

Notes:

1. Per the New Jersey Carrier-to-Carrier Guidelines a "valid response" excludes "Time Outs" or pre-order queries for which a response was not returned within 60 seconds.
2. The KPMG Benchmark of average response time is derived from the average of Verizon NJ EnView retail averages on the test day, plus four seconds. For Parsed CSRs, the benchmark is derived from the average of Verizon NJ EnView retail averages on the test day, plus ten seconds. For PSA the benchmark is from the April 2001 Verizon NJ EnView retail averages plus 4 seconds.
3. N/A = There is no standard identified in the New Jersey Carrier-to-Carrier Guidelines for these query types.

Table 2-9: Peak Day EDI Pre-Order Response Timeliness: Volume Evaluation

Query Type	Number of Valid Responses	Range of Response Time (Sec)		Average Response Time (Sec)	
		Min	Max	Benchmark	KPMG Consulting
ADR	785	2	26	10.77	3.92
Parsed CSR	7,639	3	57	10.43	5.91
DDA	946	1	57	6.42	2.37
DLR	664	1	29	NA	3.45
LQB	227	3	48	NA	13.42
LXR	899	2	34	10.59	3.62
PSA	256	10	24	14.28	12.18
Count	11,416				

Notes:

1. Per the New Jersey Carrier-to-Carrier Guidelines, a "valid response" excludes "Time Outs" or pre-order queries for which a response was not returned within 60 seconds.
2. The KPMG Benchmark of average response time is derived from the average of Verizon NJ EnView retail averages on the test day, plus four seconds. For Parsed CSRs, the benchmark is derived from the average of Verizon NJ EnView retail averages on the test day, plus ten seconds. For PSA the benchmark is from the April 2001 Verizon NJ EnView retail averages plus 4 seconds.
3. N/A = There is no standard identified in the New Jersey Carrier-to-Carrier Guidelines for these query types.

Table 2-10: Stress Day EDI Pre-Order Response Timeliness: Volume Evaluation

Query Type	Number of Valid Responses	Range of Response Time (Sec)		Average Response Time (Sec)	
		Min	Max	Benchmark	KPMG Consulting
ADR	514	2	16	10.64	3.89
Parsed CSR	4,968	2	55	10.57	4.42
DDA	605	1	4	6.61	1.86
DLR	440	2	8	NA	3.31
LQB	147	3	58	NA	14.17
LXR	588	2	16	10.14	3.59
PSA	172	10	24	14.28	12.42
Count	7,434				

Notes:

1. Per the New Jersey Carrier-to-Carrier Guidelines, a "valid response" excludes "Time Outs" or pre-order queries for which a response was not returned within 60 seconds.
2. The KPMG Benchmark of average response time is derived from the average of Verizon NJ EnView retail averages on the test day, plus four seconds. For Parsed CSRs, the benchmark is derived from the average of Verizon NJ EnView retail averages on the test day, plus ten seconds. For PSA the benchmark is from the April 2001 Verizon NJ EnView retail averages plus 4 seconds.
3. N/A = There is no standard identified in the New Jersey Carrier-to-Carrier Guidelines for these query types.

Table 2-11: GUI Pre-Order Response Timeliness: Volume Evaluation

Query Type	Number of Valid Responses	Range of Response Time (Sec)		Average Response Time (Sec)	
		Min	Max	Benchmark	KPMG Consulting
ADR	440	1	30	13.30	8.07
CSR	4,107	1	38	7.53	5.52
DLR	352	1	24	NA	7.38
LQB	69	4	32	NA	13.38
LXR	509	1	29	13.33	5.51
Count	5,477				

Notes:

1. Per the New Jersey Carrier-to-Carrier Guidelines, a "valid response" excludes "Time Outs" or pre-order queries for which a response was not returned within 60 seconds.
2. The KPMG Benchmark of average response time is derived from the average of Verizon NJ EnView retail averages during the month of October, plus seven seconds.
3. N/A = There is no standard identified in the New Jersey Carrier-to-Carrier Guidelines for these query types.

Table 2-12: Normal Day-1 GUI Pre-Order Response Timeliness: Volume Evaluation

Query Type	Number of Valid Responses	Range of Response Time (Sec)		Average Response Time (Sec)	
		Min	Max	Benchmark	KPMG Consulting
ADR	107	3	28	12.88	5.97
CSR	1,007	3	31	7.66	8.52
DLR	84	5	22	N/A	8.11
LQB	24	5	17	N/A	9.79
LXR	125	4	29	13.52	7.13
Count	1,347				

Notes:
1. Per the New Jersey Carrier-to-Carrier Guidelines, a "valid response" excludes "Time Outs" or pre-order queries for which a response was not returned within 60 seconds.
2. The KPMG Benchmark of average response time is derived from the average of Verizon NJ EnView retail averages on the test day, plus seven seconds.
3. N/A = There is no standard identified in the New Jersey Carrier-to-Carrier Guidelines for these query types.

Table 2-13: Normal Day-2 GUI Pre-Order Response Timeliness: Volume Evaluation

Query Type	Number of Valid Responses	Range of Response Time (Sec)		Average Response Time (Sec)	
		Min	Max	Benchmark	KPMG Consulting
ADR	108	4	27	13.77	12.81
CSR	1,019	1	27	7.49	4.61
DLR	82	1	10	N/A	7.88
LQB	20	6	32	N/A	19.60
LXR	118	4	27	13.08	5.58
Count	1,347				

Notes:
1. Per the New Jersey Carrier-to-Carrier Guidelines, a "valid response" excludes "Time Outs" or pre-order queries for which a response was not returned within 60 seconds.
2. The KPMG Benchmark of average response time is derived from the average of Verizon NJ EnView retail averages on the test day, plus seven seconds.
3. N/A = There is no standard identified in the New Jersey Carrier-to-Carrier Guidelines for these query types.

Table 2-14: Peak Day GUI Pre-Order Response Timeliness: Volume Evaluation

Query Type	Number of Valid Responses	Range of Response Time (Sec)		Average Response Time (Sec)	
		Min	Max	Benchmark	KPMG Consulting
ADR	161	1	30	12.89	6.95
CSR	1,573	1	38	7.43	4.18
DLR	134	9	5	N/A	6.37
LQB	19	4	17	N/A	12.00
LXR	185	1	11	13.59	4.11
Count	2,072				

Notes:
1. Per the New Jersey Carrier-to-Carrier Guidelines, a "valid response" excludes "Time Outs" or pre-order queries for which a response was not returned within 60 seconds.
2. The KPMG Benchmark of average response time is derived from the average of Verizon NJ EnView retail averages on the test day, plus seven seconds.
3. N/A = There is no standard identified in the New Jersey Carrier-to-Carrier Guidelines for these query types.

Table 2-15: Stress Day GUI Pre-Order Response Timeliness: Volume Evaluation

Query Type	Number of Valid Responses	Range of Response Time (Sec)		Average Response Time (Sec)	
		Min	Max	Benchmark	KPMG Consulting
ADR	64	2	26	13.64	6.40
CSR	508	2	34	7.52	5.58
DLR	52	2	24	N/A	8.04
LQB	6	7	16	N/A	11.34
LXR	81	2	24	13.14	6.12
Count	711				

Notes:
1. Per the New Jersey Carrier-to-Carrier Guidelines, a "valid response" excludes "Time Outs" or pre-order queries for which a response was not returned within 60 seconds.
2. The KPMG Benchmark of average response time is derived from the average of Verizon NJ EnView retail averages on the test day, plus seven seconds.
3. N/A = There is no standard identified in the New Jersey Carrier-to-Carrier Guidelines for these query types.

Figure 2-3: Normal Day (10/10) EDI Pre-order PSA Response Time Distribution

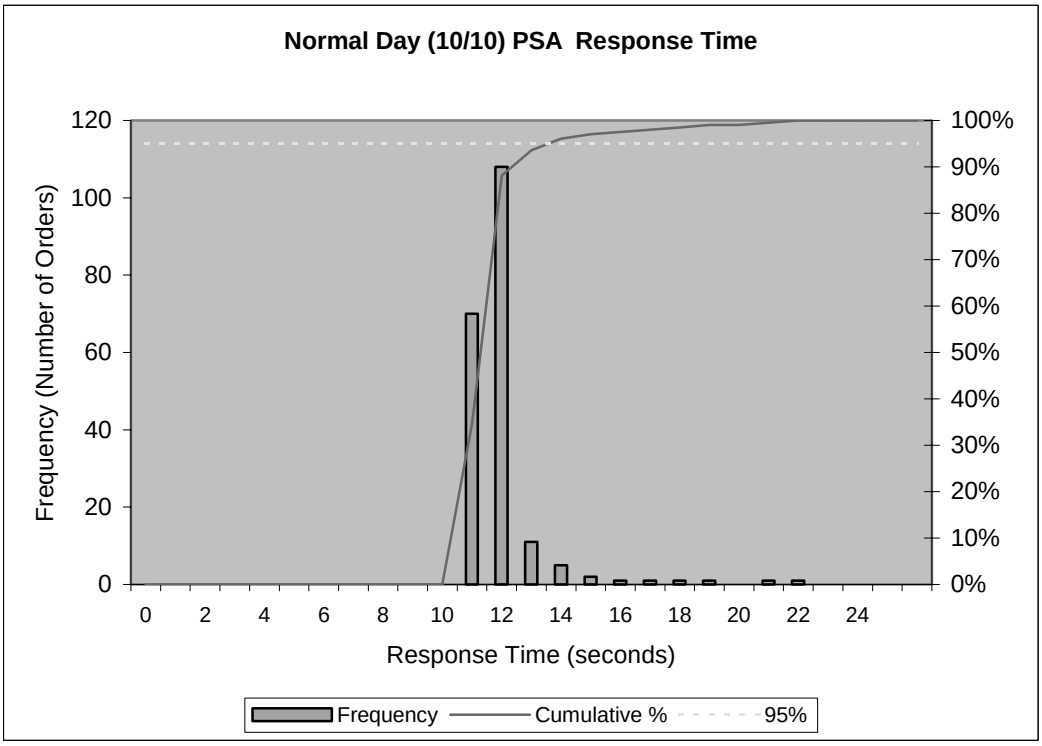

Figure 2-4: Normal Day (10/17) EDI Pre-order PSA Response Time Distribution

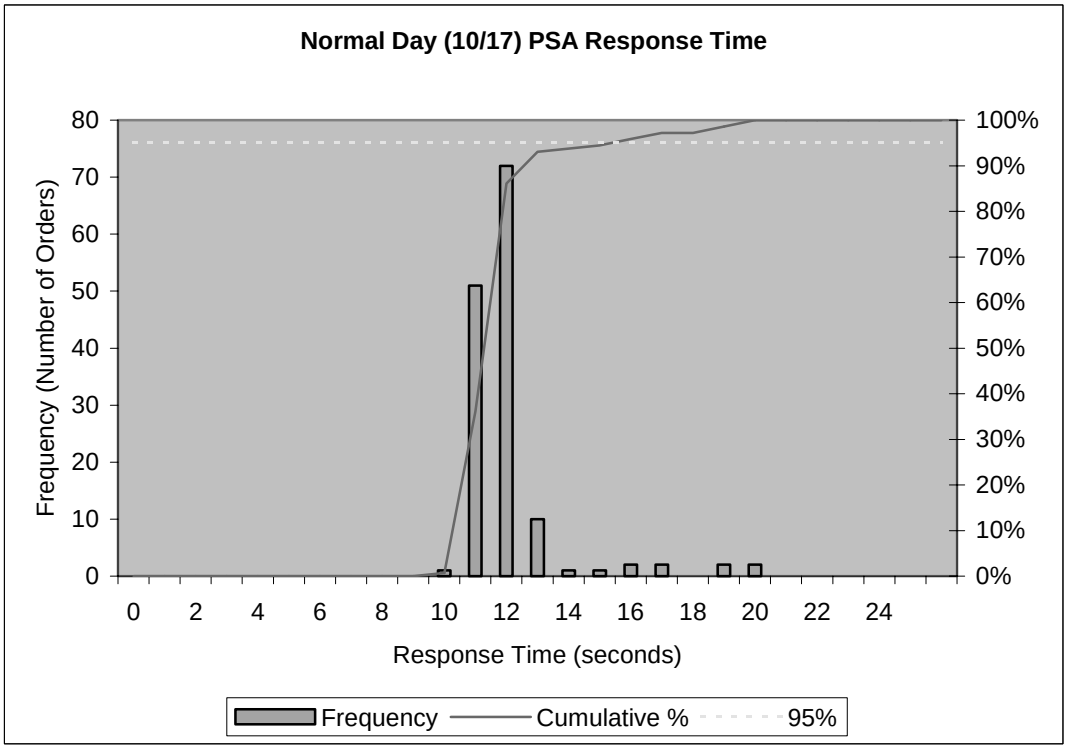

Figure 2-5: Peak Day (10/12) EDI Pre-Order PSA Response Time Distribution

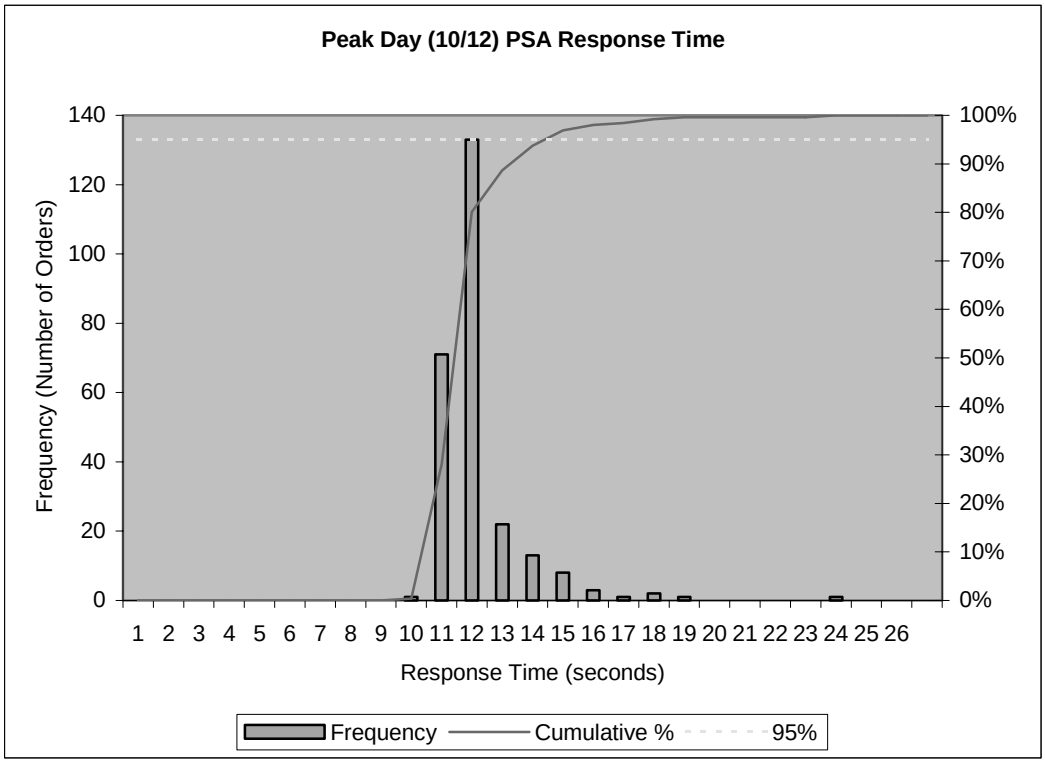

Figure 2-6: Stress Test (10/20) EDI Pre-order PSA Response Time Distribution

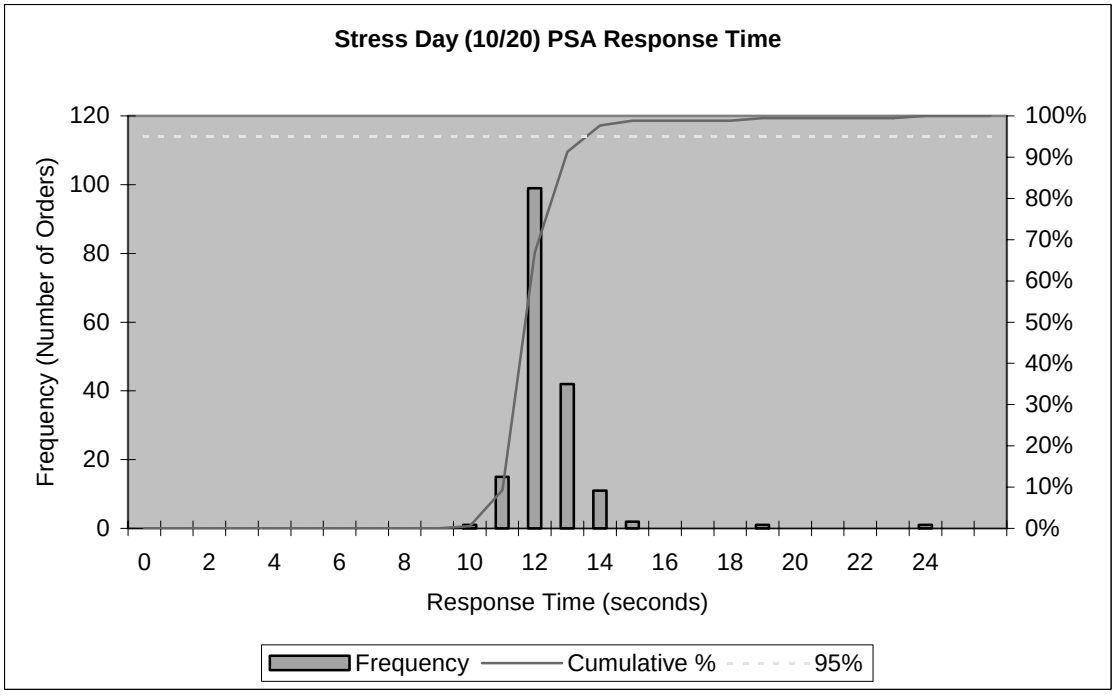

Figure 2-7: Normal Day (10/17) EDI Pre-Order Error Response Time Distribution

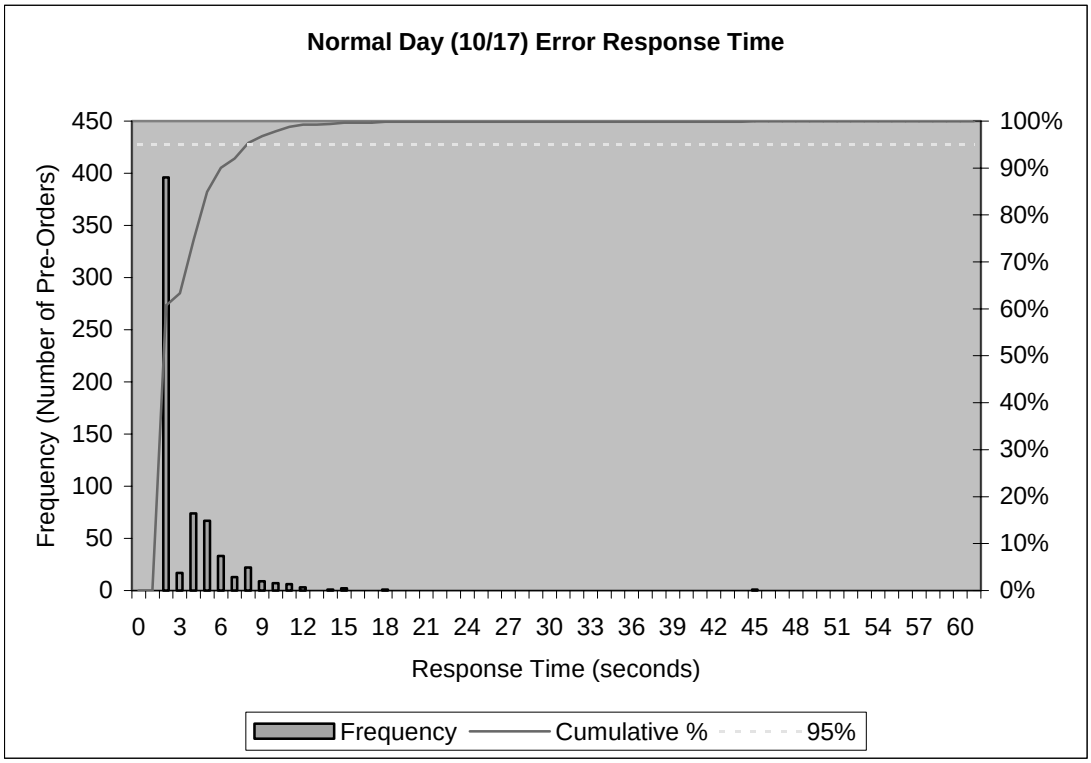

Figure 2-8: Peak Day (10/12) EDI Pre-Order Error Response Time Distribution

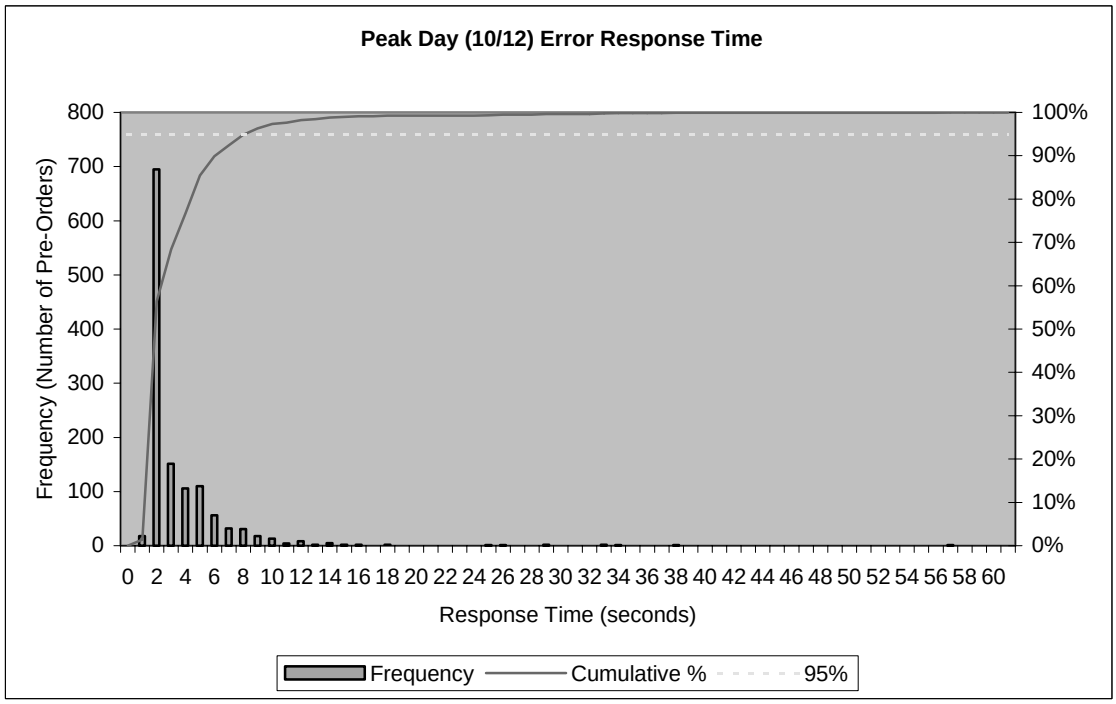

Table 2-16: EDI LSR Response Timeliness: Volume Evaluation

Test Day	Total LSRs Submitted	Flow-Through Eligible LSRs Submitted	Acknowledgements Received			LSRLR Responses Received		
			Number	Percent on Time	Average Resp Time	Number	Percent on Time	Average Resp Time
Normal Day-1	3,455	3,053	3,455	100%	0.16	3,053	100%	3.03
Normal Day-2	3,455	3,053	3,455	100%	0.16	3,049	99.9%	3.32
Peak	5,071	4,472	5,071	100%	0.16	4,267	95.4%	36.66
Stress	2,937	2,580	2,937	100%	0.19	2,574	99.8%	5.89
Total	**14,918**	**13,158**	**14,918**	**100%**	**0.17**	**12,943**	**98.4%**	**14.78**

Notes:
1. Per the New Jersey Carrier-to-Carrier Guidelines, an Acknowledgement is considered on time if it is received within 120 minutes of the submission of a corresponding LSR.
2. Number of Flow-Through eligible LSRs does not include intentional errors submitted.
3. Per the New Jersey Carrier-to-Carrier Guidelines, a valid response is considered on time if it is received within 120 minutes of the submission of a corresponding LSR
4. Response times are depicted in minutes.

Table 2-17: GUI LSR Response Timeliness: Volume Evaluation

Test Day	Total LSRs Submitted	Flow-Through Eligible LSRs Submitted	LSC Responses Received		
			Number	Percent on Time	Average Response Time (min)
Normal Day-1	549	519	489	94.2%	17.29
Normal Day-2	609	579	571	98.6%	7.75
Peak	803	759	717	94.5%	42.76
Stress	478	449	427	95.1%	4.69
Total	**2,439**	**2,306**	**2,204**	**95.6%**	**20.56**

Notes:
1. Per the New Jersey Carrier-to-Carrier Guidelines, an Acknolwedgement is considered on time if it is received within 120 minutes of the submission of a corresponding LSR.
2. Number of Flow-Through eligible LSRs does not include intentional errors submitted.
3. Per the New Jersey Carrier-to-Carrier Guidelines, a valid response is considered on time if it is received within 20 minutes of the submission of a corresponding LSR.
4. Response times are depicted in minutes.

This page is intentionally blank.

E. Test Results: Order Flow-Through Evaluation (TVV3)

1.0 Description

The Order Flow-Through (FT) Evaluation (TVV3) assessed the ability of mechanized orders, submitted via Electronic Data Interchange (EDI) or Verizon's Web Graphical User Interface (GUI), to flow from the Competitive Local Exchange Carriers (CLEC) through the interface and into Verizon New Jersey's (Verizon NJ) ordering system without manual intervention. Orders eligible to flow-through are defined in the following Verizon-South documentation: Generic Flow-Through Ordering Scenarios Document, dated August 17, 2000, last updated February 20, 2001[14]; Platform USOC In-scope Document dated July 18, 2000, last updated January 30, 2001[15]; Resale USOC In-scope Document, dated June 17, 2000, last updated January 19, 2001[16]. Only orders submitted by KPMG Consulting that were eligible to flow-through were included in this evaluation. The list of order types eligible to flow-through was updated during the testing period due to corresponding eligible Verizon-South documentation changes and those additions and deletions were incorporated into the test.

Supplements and cancels designed to flow-through were also submitted. KPMG Consulting monitored all flow-through eligible order transactions submitted by KPMG Consulting to verify that the orders flowed through in accordance with Verizon documentation.

2.0 Methodology

This section summarizes the test methodology.

[14] The Generic Flow-Through Ordering Scenarios Document was updated by Verizon on the following dates between the initial published date and the last update of February 20, 2001: October 3, 2000, October 27, 2000, November 14, 2000, November 16, 2000, December 1, 2000, January 26, 2001, February 5, 2001

[15] The Platform USOC In-scope Document was updated by Verizon on the following dates between the initial published date and the last update of January 30, 2001: October 31, 2000, November 11, 2000

[16] The Resale USOC In-scope Document was updated by Verizon on the following dates between the initial published date and the last update of January 19, 2001: October 27, 2000, November 11, 2000,

2.1 Business Process Description

The following diagram illustrates the process and system flow for a wholesale, mechanized order from submission through service order generation.

Figure 3-1: Process Systems Flow for a Wholesale Mechanized Order

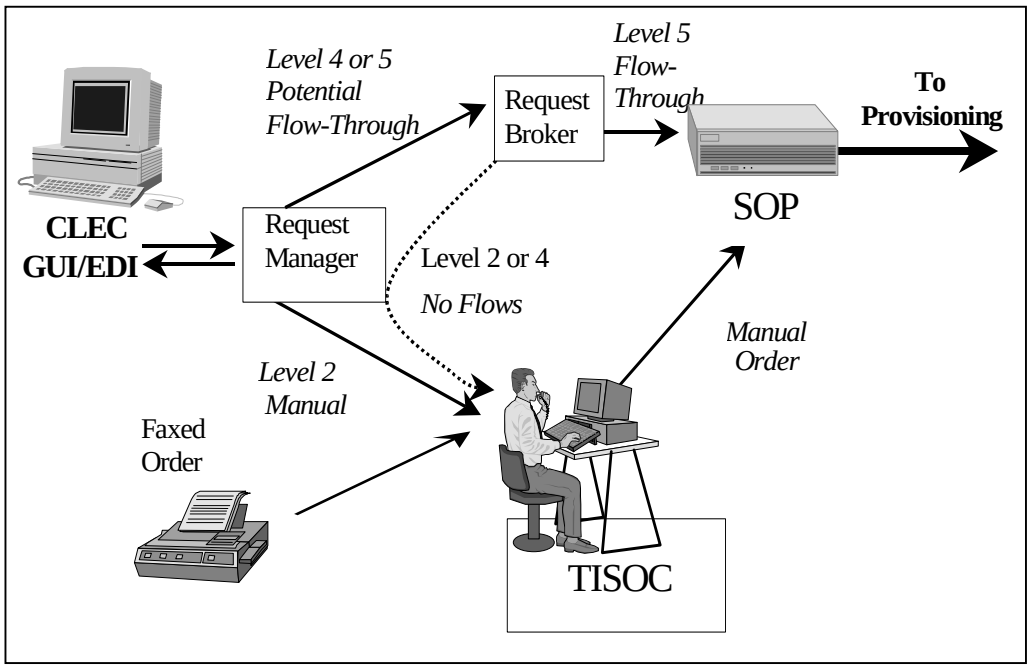

CLEC EDI and GUI orders enter the systems of Verizon NJ through Request Manager. After an order clears a series of edits and is determined to be a valid transaction, algorithms and order business rules are used to determine flow-through eligibility (Level 2, Level 4, or Level 5). CLEC EDI and GUI orders enter the systems of Verizon NJ through Request Manager. After an order clears a series of edits and is determined to be a valid transaction, algorithms and order business rules are used to determine flow-through eligibility (Level 2, Level 4, Level 5). Only orders determined to be Level 5 are considered Flow-Through (FT). A Level 2 order is routed by Request Manager to the Telecommunications Industry Services Operation Center (TISOC)[17] for manual entry by a Verizon NJ representative into the Service Order Processor (SOP). Level 4 and Level 5 orders are forwarded by the Request Manager to the Request Broker. An order that does not pass Request Broker edits is Non-Flow-Through (NFT) (Level 4). In this case, a shell of the order is created and a reason code is provided for manual handling at the TISOC. While Level 4 transactions require less handling than Level 2 transaction, they are flow-through. A Level 5 order passes the Request Broker edits, flows through SOP and on to the appropriate OSS.

[17] KPMG Consulting's test activities for the Order Flow-Through Evaluation (TVV3) were conducted prior to Verizon's announcement (May 2001) that the Telecommunication's Industry Service Operations Centers (TISOCs) would be re-organized along product lines to provide footprint wide assistance and renamed to National Market Centers (NMCs).

2.2 Scenarios

The Order Flow-Through Evaluation (TVV3) examined test cases submitted as part of POP Functional Evaluation (TVV1). Expected results for these test cases were determined using the publicly available Verizon-South order flow-through documentation. Table 3-1 lists the transaction types tested in the evaluation.

Table 3-1: TVV3 Transaction Scenarios Tested for Flow-Through

Scenario Description	Product			
	Resale	**UNE-P**	**UNE-L**	**UNE-EEL**
Migration from Verizon NJ "as-is"	X	X		
Migration from Verizon NJ "as-specified"	X	X		
Migrate lines from Verizon NJ without number portability			X	
Stand-Alone LNP			X	
Migrate lines from Verizon NJ with LNP			X	
New customer	X	X	X	
Directory listing change	X	X	X	
Add lines for an existing customer	X			
Feature changes for an existing customer	X	X		
Suspend and/or restore service		X		
Disconnect (full or partial)	X	X	X	X
Moves (inside or outside)	X			
Convert from Resale to UNE-Platform		X		
Convert from Resale to UNE-L			X	

2.3 Test Targets & Measures

The test targets and measures used in this test included the following processes and sub-processes:

- Assess FT documentation
  - Analyze Verizon documentation for accuracy, completeness and clarity
- Assess transaction flow-through behavior
  - Assess orders for Resale products and services for flow-through compliance
  - Assess UNE-P products and services for flow-through compliance
  - Assess Loop products and services for flow-through compliance

2.4 Data Sources

The data collected for the test included the following: Generic Flow-Through Ordering Scenarios Documents, Resale and Platform USOC In-Scope Documents, Verizon Wholesale Flow-Through Workshops, KPMG Consulting TVV1 Test Cases, Daily Flow-Through Reports generated by Verizon, and the Verizon NJ MTP. In addition, KPMG Consulting monitored and tracked all flow-through eligible orders, which were consolidated into a tracking/analysis spreadsheet.

2.4.1 Data Generation/Volumes

Verizon NJ and KPMG Consulting performed the following data collection activities for this test:

- KPMG Consulting generated test transactions as part of POP Functional Evaluation (TVV1) with unique purchase order numbers (PONs) and gathered data on these transactions, including the receipt of a Local Service Request Local Response (LSRLR) and/or error (ERR).
- KPMG Consulting determined whether each test case instance was expected to flow-through. This determination was based on the publicly available Verizon-South FT documentation.
- Verizon NJ generated daily reports from September 15, 2000 to March 2, 2001 that identified the actual flow-through status of transactions, and transmitted these reports to KPMG Consulting.

2.5 Evaluation Methods

The evaluation process was comprised of the following worksteps:

- Review Verizon NJ FT documentation.
- Identify expected FT cases based on the Verizon-South FT documentation.
- Develop a report and validation process to track transaction flow-through status.
- Submit transactions via EDI and GUI.
- Receive and analyze the Verizon NJ FT report.
- Compare expected FT vs. actual FT outcome.
- Generate a set of reports providing data on expected, unexpected, and missing PONs.
- Identify and analyze unexpected results.
- Perform statistical analysis on achieved flow-through findings to determine if evaluation criteria were satisfied.

2.6 Analysis Methods

The Order Flow-Through Evaluation (TVV3) included a checklist of evaluation criteria developed by KPMG Consulting during the initial phase of the Verizon NJ OSS Evaluation. These evaluation criteria provided the framework of norms, standards, and guidelines for the Order Flow-Through Evaluation (TVV3).

The data collected were analyzed employing the evaluation criteria documented in Section 3.1 below.

3.0 Results

This section identifies the evaluation criteria and test results.

3.1 Results Summary

The results of this test are presented in the Table 3-2 below.

Table 3-2: TVV3 Evaluation Criteria and Results

Test Reference	Evaluation Criteria	Result	Comments
TVV3-1	Verizon NJ Order Flow-Through documentation is complete, accurate, and clear.	Satisfied	KPMG Consulting evaluated publicly available documentation to conduct the Order Flow-Through Evaluation (TVV3) test. This included the Verizon-South Flow-Through Ordering Scenarios, the Resale In-scope USOC List and the Platform In-scope USOC List. KPMG Consulting found the documentation complete, accurate and clear.
TVV3-2	Verizon NJ ordering systems process Resale transactions in accordance with published flow-through rules.	Satisfied	All resale test cases (168) submitted as part of the POP Functional Evaluation (TVV1) identified as FT eligible flowed as expected, according to Verizon-South flow-through documentation. See Table 3-3: Detailed Results for Resale Products for additional details.
TVV3-3	Verizon NJ ordering systems process UNE-P transactions in accordance with published flow-through rules.	Satisfied	All UNE-P test cases (115) submitted as part of the POP Functional Evaluation (TVV1) identified as FT eligible flowed as expected, according to Verizon-South flow-through documentation. See Table 3-4: Detailed Results for UNE-P Products for additional details.
TVV3-4	Verizon NJ ordering systems process UNE-L transactions in accordance with published flow-through rules.	Satisfied	All UNE-L (65) test cases submitted as part of the POP Functional Evaluation (TVV1) identified as FT eligible flowed as expected, according to Verizon-South flow-through documentation. See Table 3-5: Detailed Results for UNE-L Products for additional details.

Table 3-3: TVV3 Detailed Results for Resale Products

Resale			
Expected FT (as of 9/00)	205	Actual FT (as of 3/18/01)	168
Transactions requiring a supplement to be issued (drop to level 2 per Generic Flow-Through Ordering Scenarios Document	(36)		
Verizon System Errors (Correction implemented during the course of testing. Subsequent transactions did flow through)	(1)		
TOTAL	**168**		**168**

Table 3-4: TVV3 Detailed Results for UNE-P Products

UNE-P			
Expected FT (as of 9/00)	143	Actual FT	115
Transactions requiring a supplement to be issued (drop to level 2 per Generic Flow-Through Ordering Scenarios Document)	(17)		
Verizon Documentation Updates (transactions no longer expected to flow through)	(10)		
Verizon System Errors (correction implemented during the course of testing. Subsequent transactions did flow through)	(1)		
TOTAL	**115**		**115**

Table 3-5: TVV3 Detailed Results for UNE-L Products

UNE-L			
Expected FT (as of 9/00)	270	Actual FT (as of 3/18/01)	66
Transactions requiring a supplement to be issued (drop to level 2 per Generic Flow-Through Ordering Scenarios Document)	(160)		
Verizon Documentation Updates (transactions no longer expected to flow through)	(36)		
Verizon System Errors (correction implemented during the course of testing. Subsequent transactions did flow through)	(8)		
TOTAL	66		66

This page is intentionally blank.

V. Provisioning Domain Results and Analysis Section

This page is intentionally blank.

A. Test Results: Network Design Request, Collocation, and Interconnection Planning and Validation Review (PPR7)

1.0 Description

The Network Design Request, Collocation, and Interconnection Planning and Validation Review (PP7) evaluated processes, procedures, supporting systems, and tools used by Verizon New Jersey (Verizon NJ) to provision Competitive Local Exchange Carrier (CLEC) Collocation and Network Design Requests (NDR).

Collocation permits a CLEC to offer Unbundled Network Element (UNE) services to their customers, as well as allowing connections of these customers to the Public Switch Telephone Network through Interoffice Facilities. The NDR process allows a CLEC to establish a presence in a Verizon NJ switch, when a CLEC requires Verizon NJ to provide dial tone from a Verizon NJ switch port.

This test did not examine interconnection for other purposes such as from network to network (e.g. with an interexchange carrier).

2.0 Methodology

This section summarizes the test methodology.

2.1 Business Process Description

Verizon NJ provides collocation and NDR planning services to facilities-based CLECs in order to support the provisioning of UNEs.

Network Design: The intent of the NDR process is to (i) gather information related to a CLEC's desired product offering; (ii) jointly determine the criteria for a detailed design for establishing a CLEC presence in Verizon NJ's network and (iii) initiate the process of establishing CLEC services. Depending on the type of service offering the CLEC is interested in providing to its customer base, the CLEC must identify and communicate the relevant network design characteristics to Verizon NJ. Verizon NJ assigns a Service Delivery Engineer (SDE) to coordinate CLEC NDR initiatives.

Collocation*:* Collocation arrangements are required for CLECs wishing to offer UNE services such as local loop and interoffice facilities in New Jersey. CLECs can submit an application requesting either a virtual or physical collocation arrangement.

CLECs applying for a virtual collocation installation are required to transfer ownership of their telecommunications equipment to Verizon NJ for a nominal monetary fee. Verizon NJ then provisions, maintains, and repairs this equipment as instructed by the CLEC. Under the provisions of a virtual collocation, Verizon NJ provides the CLEC with remote access for provisioning and maintenance activities. Although the CLECs equipment is physically located in Verizon NJ's central office relay racks it remains dedicated to the CLEC. The CLEC does not have physical access to this equipment.

CLECs applying for a physical collocation installation are allocated a secure area in a Verizon NJ central office where they are allowed to install, maintain, and administer their own telecommunications equipment. Unlike virtual collocation, the CLEC has physical access to its equipment. There are a number of variations of physical collocation such as: Secured Collocation Open Physical Environment (SCOPE) and Cageless Collocation – Open Physical Environment (CCOE).

SCOPE is a form of physical collocation in which CLECs place their equipment in a secure, environmentally conditioned area. A SCOPE arrangement enables CLECs that do not want standard cage-enclosed collocation nodes to install one or more bays of equipment in a secure area. Each individual CLEC is responsible for providing and installing its own equipment and performing all maintenance-related activities.

CCOE is a form of physical collocation, which allows CLECs to place equipment in single bay increments in Verizon conditioned space outside traditional physical collocation arrangements. This type of arrangement allows the CLECs equipment to be installed in a separate lineup from Verizon NJ's equipment. Verizon NJ's approved equipment installation vendors (hired by the CLEC) are required to install the CLECs equipment.

2.2 Scenarios

Scenarios were not applicable to this test.

2.3 Test Targets & Measures

The test target was Verizon NJ's collocation and network design planning processes, which included reviews of the following sub-processes:

- Planning
- Project management
- Resources
- Testing and Implementation

2.4 Data Sources

The data collection performed for this test centered on interviews, walkthroughs, and reviews of the following documentation supplied by Verizon NJ at the request of the Test Manager:

- Telecom Industry Services Operations Center (TISOC) Methods and Procedures
- TISOC Methods and Procedures for Network Design Requests
- Verizon Communications Operator Services Questionnaire for Unbundled CLECs
- Bell Atlantic Network Equipment Installation Standards
- NOCIL 9911-009, Issue # 1
- Routing of CLEC traffic to Operator Services and Directory Assistance - Bell Atlantic – South
- Bell Atlantic Real Estate CLEC Cage Construction Standards
- Bell Atlantic Central Office Vendor Installation Qualification Checklist

2.4.1 Data Generation/Volumes

This test did not rely on data generation or volume testing.

2.5 Evaluation Methods

The evaluation methods used for this test included the analysis of information obtained through interviews and through reviews of documentation provided by Verizon NJ personnel supporting the collocation and NDR process in New Jersey. In addition, discussions were held with members of the CLEC community to understand their experiences with the collocation and/or NDR processes.

2.6 Analysis Methods

The NDR, Collocation, and Interconnection Planning Verification and Validation Review (PPR7) included a checklist of evaluation criteria developed by KPMG Consulting during the initial phase of the Verizon NJ OSS Evaluation. These evaluation criteria, as presented in the Master Test Plan, provided the framework of norms, standards and guidelines for the NDR, Collocation, and Interconnection Planning Verification and Validation Review (PPR7)

3.0 Results

This section identifies the evaluation criteria and test results.

3.1 Results Summary

The results of this test are presented in the table below.

Table 7-1: PPR7 Evaluation Criteria and Results

Test Reference	Evaluation Criteria	Results	Comments
PPR7-1	Collocation projects are implemented through structured, documented methodologies that create timely and accurate results.	Satisfied	Verizon NJ documentation such as the Virtual Collocation project sequence document and the CLEC Handbook (March 2000, Volume I, Sections 6.4.1 and 8.7.3; Volume III, Section 4) describe the steps that occur during a collocation project. Each CLEC is assigned a Verizon Account Manager who is dedicated to their account. Verizon NJ also has Local Collocation Coordinators to help in the execution of CLECs collocation projects. All collocation projects are tracked in a central Collocation Database which highlights the milestones and installation intervals. KPMG Consulting met with Verizon NJ and reviewed the Collocation Database. During this review, Verizon personnel explained the required tasks in provisioning a collocation request from application receipt to CLEC acceptance. Verizon personnel also demonstrated how they generate collocation reports that are distributed internally on a weekly and monthly basis. From June 2000 through November 2000, Verizon NJ completed 99% of the collocation projects according to the installation intervals required by Verizon NJ methodologies.

Test Reference	Evaluation Criteria	Results	Comments
PPR7-2	Network Design projects are implemented through structured, documented methodologies.	Satisfied	Internal Verizon documentation such as the TISOC Method and Procedure for NDR Process and the CLEC Handbook (March 2000, Volume I, Section 6.4.2) describe how NDR projects are planned and executed. Verizon NJ assigns a Service Delivery Engineer (SDE) to coordinate Network Design Request activities with a CLEC. Each SDE creates a project binder that contains the CLECs NDR application form, relevant NDR correspondence, and a detailed project checklist. Verizon NJ has two main systems that are used to monitor NDRs: the Lotus Notes Database, which contains information on each CLEC NDR, and an Excel spreadsheet that primarily indicates in which states a CLEC has a presense. Each team within Verizon NJ that is involved in an NDR implementation has a dedicated electronic mail box for exchanging correspondence and requests. KPMG Consulting observed usage of this dedicated electronic mail box and the Lotus Notes database.
PPR7-3	Verizon and CLEC collocation responsibilities are defined and available for collocation implementations.	Satisfied	Verizon NJ and CLEC collocation responsibilities are defined in the CLEC Handbooks (March 2000, Volume I, Sections 6.4.1, Volume III, Sections 4.1-4.5) and internal Verizon documentation such as: the Collocation Guidelines document and the New Jersey Collocation Office Responsibilities document. CLECs are also provided with a collocation project sequence that gives a high level view of CLEC and Verizon responsibilities, and the corresponding time frames involved with each activity. A CLEC's main Verizon NJ contact is their Account Manager.
PPR7-4	Verizon and CLEC responsibilities are defined and available for network design implementations.	Satisfied	The responsibilities for implementing an NDR are defined in Verizon documentation such as the TISOC Method and Procedure for NDR Process document. This document provides detailed information about the NDR provisioning process and describes the various roles involved when implementing an NDR. It also lists the specific responsibilities of the CLEC, the Account Manager, and the Service Delivery Engineer. This document is posted on Verizon's website (http://www.bellatlantic.com/wholesale) and can be easily accessed by both CLECs and Verizon NJ personnel. CLECs interact primarily with the Verizon Account Manager (AM) and the Service Delivery Engineer (SDE) for the duration of the NDR project. The AM is responsible for ensuring that the CLEC completes the appropriate forms and then the AM forwards that information to the SDE. The SDE focuses more on the technical implementation aspects of an NDR. If

Test Reference	Evaluation Criteria	Results	Comments
			customized routing is required, the SDE solicits the support of the Verizon NJ Software Provisioning team.
PPR7-5	Collocation methodologies specify a series of meetings and project milestones.	Satisfied	The CLEC Handbook (March 2000, Volume I, Section 8.7.3; Volume III, Sections 4.2, 4.3, and 4.5) details the sequence of collocation meetings and milestones.
PPR7-6	Network Design methodologies specify a series of meetings and project milestones.	Satisfied	Meetings and milestones for the NDR process are defined in the CLEC Handbook (March 2000, Volume I, Section 6.4.2) and internal Verizon documentation such as the NDR Checklist-Verizon - South document.
PPR7-7	A tracking system(s) is (are) used to monitor and/or collect information from the beginning to the completion of collocation projects.	Satisfied	Verizon NJ uses a common tracking system called the Collocation Database. The Collocation Database is a tool used by internal Verizon NJ teams involved in the collocation process to track and manage collocation projects. Major milestones are tracked and status reports are regularly generated for project performance monitoring. The following Verizon NJ organizations use this database: Wholesale Network Services, Local Collocation Coordinators, Central Office Engineering, and the Regional Collocation Customer Network Engineering group.
PPR7-8	A tracking system(s) is (are) used to monitor and/or collect information from the beginning to the completion of Network Design projects.	Satisfied	Verizon NJ uses a Lotus Notes database and an Excel Spreadsheet to communicate and monitor the progress of NDRs. These tools contain information/history on each NDR and indicate in which states a CLEC has a presence. In addition, each Verizon NJ NDR team has a dedicated electronic mail box for exchanging correspondence and requests. The following Verizon NJ organizations use these tools: NDR, Network Operations - Translations, Advanced Intelligent Networks, and Operator Services.
PPR7-9	Collocation decisions are documented and communicated to Verizon and CLEC participants.	Satisfied	The Collocation Database acts as a central repository for information pertaining to each collocation application. Issues and documents are recorded and attached to each application. This database provides a real-time view of the status of a collocation installation. Verizon NJ and CLEC representatives stated during interviews that Verizon NJ notifies CLECs of events or issues relating to collocation projects. Notification is provided through verbal, electronic, or written communications during the collocation provisioning process. Verizon NJ representative stated in an interview that a weekly common issues conference call with the Regional Collocation team and the managers of other teams involved with collocation activities is held to discuss the status of each collocation application and its

Test Reference	Evaluation Criteria	Results	Comments
			progress. The Verizon NJ Account Manager and Local Collocation Coordinator are the designated contacts for the CLECs.
PPR7-10	Network Design decisions are documented and communicated to Verizon and CLEC participants.	Satisfied	Essential elements of the NDR process are in place and are documented in internal Verizon documents such as TISOC Method and Procedure for NDR Process document and in the CLEC Handbook (March 2000, Volume I, Section 6.4.2). The latest NDR forms are available on Verizon's Wholesale Markets website (http://www.bellatlantic.com/wholesale). Verizon NJ representative stated in an interview that communication with the CLEC is held before and during the life cycle of an NDR implementation. Verizon NJ also stated that during the pre-NDR phase the CLEC, SDE, and NDR Project Manager meet to discuss preliminary requirements. The detailed requirements of the CLEC are identified, including all the design, planning and administration activities performed by Verizon SDEs to establish the CLECs routing instructions in a Verizon network.
PPR7-11	The collocation implementation process includes dispute resolution and escalation processes that are defined, documented,and available to both CLEC and Verizon personnel.	Satisfied	The Local Collocation Coordinator (LCC) is responsible for resolving all issues that arise during a collocation installation. Depending on the nature of the matter, the LCC may direct the CLEC to either the Verizon Regional CLEC Maintenance Center (RCMC) or the Verizon Collocation Customer Care (CCC) center. If further escalation is required, the matter will be escalated through the Verizon New Jersey collocation management structure. According to CLEC representatives, they have observed the escalation process being followed. The escalation procedures and contact lists are provided for the CLECs and Verizon personnel on the Verizon website (http://www.bellatlantic.com/wholesale/html/ resources.htm). The escalation process lists the process steps such as: product availability, general business policies, pre-order and ordering, provisioning, maintenance, and billing. For each process step, a corresponding Verizon center is listed and two levels of escalation are provided with contact names. Level 1 escalations are referred to a Director and level 2 to a Vice President.
PPR7-12	The Network Design implementation process includes dispute resolution and	Satisfied	The Verizon NJ Account Manager and Service Delivery Engineer are responsible for resolving all issues that arise during an NDR project. If further escalation is required, the matter will be escalated through the

Test Reference	Evaluation Criteria	Results	Comments
	escalation processes that are defined, documented, and available to both CLEC and Verizon personnel.		Verizon New Jersey NDR management structure. According to CLEC representatives, they have observed the escalation process being followed. The escalation procedures are described in the CLEC Escalation Process, which can be found on the Verizon website (http://www.bellatlantic.com/wholesale/html/resources.htm). The escalation process lists the process steps such as: product availability, general business policies, pre-order and ordering, provisioning, maintenance, and billing. For each process step, a corresponding Verizon center is listed and two levels of escalation are provided with contact names. The CLECs are also given an NDR specific escalation contact list from the Verizon NDR Manager at the beginning of a NDR project.
PPR7-13	Standards and procedures are defined for ensuring that specifically trained personnel are assigned to a collocation project or customer.	Satisfied	Each CLEC is assigned a Verizon NJ Account Manager. Verizon NJ has Local Collocation Coordinators (LCCs) who are responsible for the coordination and execution of the collocation projects. LCCs have a geographic area in which they are responsible for managing the territory's collocation projects. Verizon NJ and CLECs select installers/contractors from the same pool of approved resources as described in the CLEC Handbook (March 2000, Volume I, Section 8.7.2). A CLEC may also become a Verizon approved installer/contractor once being certified by Verizon NJ. This certification process is outlined in the CLEC Handbook (March 2000, Volume I, Section 8.7). For virtual collocation projects, a CLEC is required to provide the necessary training for Verizon NJ personnel. This is documented in the CLEC Handbook (March 2000, Volume III, Section 4.3).
PPR7-14	Procedures are defined for ensuring that project staffs are available to collaborate and are empowered to resolve issues for collocation projects.	Satisfied	The Verizon Account Manager, Local Collocation Coordinator, and Collocation Customer Care Center provide support to the CLEC. Account Managers are assigned to a CLEC and provide assistance through the collocation process. The LCC functions as an Account Manager at the local geographical level. The LCC interacts with all of the Verizon NJ collocation support groups and requests those teams' expertise to ensure the delivery of a collocation. The Collocation Customer Care team provides CLECs with post hand-over support. The Collocation Customer Care Center is a help desk that has direct communication with all Verizon NJ collocation teams. Verizon NJ representatives stated in an interview that on

Test Reference	Evaluation Criteria	Results	Comments
			a weekly basis, there is a common issues conference call with the Regional Collocation team and the managers of other teams involved with collocation activities to discuss the status of each collocation application and its progress.
PPR7-15	Procedures are defined for ensuring CLECs have the same access to their collocation facilities as Verizon has to its own facilities.	Satisfied	Guidelines for CLEC access to equipment and facilities are defined in the CLEC Handbook (March 2000, Volume I, Section 8.7.3, Volume III, Sections 4.2 and 4.5.2). The Verizon NJ Collocation Guidelines cite the process for CLECs to gain access to facilities. The Collocation Guidelines describe the security, procedures and adherence to the rules and regulations associated with providing the CLECs access to Verizon premises, common areas within Verizon premises, and the individual CLEC collocation space. The CLECs have control over access to their collocation facilities. The facilities are gated and the CLECs regulate access to their particular facilities through locking or unlocking those facilities. Both CLEC and Verizon personnel may access Verizon premises through the use of access cards.
PPR7-16	Formal procedures are in place to quantify and track scope changes during collocation implementations and are communicated to both Verizon and CLEC personnel.	Satisfied	Deviations from the planned schedule for collocation projects are monitored and tracked. Verizon NJ regularly generates reports to monitor potential deviations from the schedule. Schedule changes are communicated within Verizon NJ via the Collocation Database that serves as the central project tracking system. The Account Manager or the Local Collocation Coordinator, in the form of an email, also communicates those schedule changes to the CLEC. Verizon NJ handles changes to the scope of a collocation project via augments. This process is described in the CLEC Handbook (March 2000, Volume III, Sections 4.2 and 4.3). Verizon judges proposed changes to collocation installations on a case-by-case basis. The impact of these changes is dependent on many factors such as resources, time, and degree of change. All modifications to the project schedule are documented in the Collocation Database.
PPR7-17	Procedures are in place for defining the scope, estimating, documenting, and managing the design and costs of collocation implementations.	Satisfied	Procedures for handling the estimation, documentation, and management of costs for collocation projects can be found in the CLEC Handbook (March 2000, Volume III, Sections 4.2, 4.3, 4.4, 4.5) and NJ Board of Public Utilities tariff documentation No. 4. New Jersey uses a flat rate pricing for collocation projects; therefore, there are no cost estimates. The CLEC only incurs additional costs for work beyond the scope of a standard collocation project or special construction charges. These costs are defined and

Test Reference	Evaluation Criteria	Results	Comments
			documented in the CLEC Handbook (March 2000, Volume III, Sections 4.2, 4.3, 4.4.1, 4.4.2, 4.5.1, 4.5.2). The scope and procedures for collocation processes are described in the CLEC Handbook (March 2000, Volume I, Section 6.4.1, Volume III, Sections 4.1-4.5).
PPR7-18	Procedures are in place for defining the scope, estimating, documenting, and managing the design and costs of Network Design implementations.	Satisfied	According to Verizon NJ Network Design Project Management requirements, CLECs do not incur costs because of NDR implementation requests. The scope and objectives of a Network Design Request are defined in the CLEC Handbook, (March 2000, Volume I, Section 6.4.2) and Verizon internal documents such as TISOC Method and Procedure for NDR Process document.
PPR7-19	Standards of delivery are established for collocation implementations.	Satisfied	Network Equipment Building Systems (NEBS) is a set of industry-defined standards for areas such as allowable equipment, workmanship, and general central office installation standards. These NEBS standards are referenced in the CLEC Handbook (March 2000, Volume I, Section 8.7, Volume III, Sections 4.2, 4.3, 4.5.1). In addition, some of these documented standards are described or are posted on Verizon's Wholesale Markets website. For example, http://www.bellatlantic.com/wholesale/html/res_nebs.htm; http://www.bellatlantic.com/wholesale/html/res_install_standards.htm; and http://www.bellatlantic.com/wholesale/html/res_coloc_cage.htm. Verizon NJ and CLEC representatives stated in separate interviews that before the turn over of a physical collocation, Verizon NJ performs an internal quality audit of the collocation site. When the collocation is acceptable to the CLEC, the CLEC performs a signoff on the deliverable.
PPR7-20	Standards of delivery are established for NDR implementations.	Satisfied	Network Equipment Building Systems (NEBS) is a set of industry-defined standards for areas such as allowable equipment, workmanship, and general central office installation standards. These NEBS standards are referenced in the CLEC Handbook (March 2000, Volume I, Section 8.7, Volume III, Sections 4.2, 4.3, 4.5.1). In addition, some of these documented standards are described or are posted on Verizon's Wholesale Markets website. An example of these documented standards: http://www.bellatlantic.com/wholesale/html/ res_nebs.htm;

Test Reference	Evaluation Criteria	Results	Comments
			http://www.bellatlantic.com/wholesale/html/res_install_standards.htm; and http://www.bellatlantic.com/wholesale/html/res_coloc_cage.htm. Verizon NJ representative stated in an interview that before the turn over of a Network Design Request, Verizon NJ performs various test calls on the equipment. These test calls are referenced in the Bell Atlantic Test Call Matrix document, Bell Atlantic – South OS/DA Validation document, and the Bell Atlantic Operator Branding Test Calls for New Jersey.

B. Test Results: Provisioning Process Evaluation (PPR10)

1.0 Description

The Provisioning Process Evaluation (PPR10) was a review of the Verizon New Jersey (Verizon NJ) processes, systems, and interfaces that provide provisioning support for Competitive Local Exchange Carrier (CLEC) and Reseller orders. The focus of the evaluation was on activities starting when the order enters into the Verizon NJ Service Order Processor (SOP), which is called the Minimum Input Service Order System (MISOS) in NJ, through the downstream systems, interfaces, and processes, and concluding at the point of service activation. The Verizon NJ SOP/MISOS is the system that controls the flow of service orders. The provisioning process consists of the following three components: (i) Assignment is the Verizon NJ process of assigning the telephone numbers, office equipment and facilities required for the service ordered; (ii) Translation is the programming of the service and features in the switch; and (iii) Dispatch/Service Activation is the point at which all items are combined to provide the requested service. These three areas were included in this evaluation.

The objective of this test was to evaluate the degree to which the provisioning environment supporting wholesale orders demonstrates parity with the provisioning environment for Verizon NJ retail orders.

2.0 Methodology

This section summarizes the test methodology.

2.1 Business Process Description

The following sections describe the Plain Old Telephone Service (POTS) and Special Services provisioning processes as well as the Verizon NJ centers responsible for these processes.

The provisioning process begins when information is received from the Verizon NJ centers responsible for order processing. For a description of the Order Entry Process, refer to Manual Order Process Evaluation (PPR8).

2.1.1 Provisioning Process Description – POTS and Special Services Orders

Centers involved with the provisioning process can be divided according to function and responsibility. Table 10-1 indicates which functional group each center belongs to as well as what provisioning tasks for which each is responsible.

Table 10-1: PPR 10 Provisioning Process Map

Responsibilities Center	Engineering	Inventory	Facilities	Translation	Problem Resolution	Dispatch
Assignment						
APC			X		X	
CPC	X	X	X		X	
FMC	X		X		X	
IOF Group	X	X	X			
NAC		X			X	
Translation						
RCMAC				X	X	
Dispatch/Service Activation						
OCO (RCCC)					X	
CSC						X
SSC						X
NOC				X		X
CO						X

Depending on the type of service being delivered, provisioning activities are categorized as either POTS or Special Services. A description of the provisioning process by these service types is provided below.

<u>POTS Orders:</u>

Orders for POTS originate from the Telecommunications Industry Services Operation Center (TISOC), the retail business offices, or the Verizon Graphical User Interface (GUI) that is used by the CLECs for direct order entry. Orders from all of the aforementioned sources then flow into MISOS. MISOS directs orders into the Service Order Analysis and Control System (SOAC), which is an operational support system used by Verizon NJ to coordinate the order management and provisioning process. SOAC schedules and manages tasks performed by other provisioning systems such as facility assignment, circuit design and network activation. SOAC sends orders to the Loop Facility Assignment and Control System (LFACS) for automated loop assignment; to SWITCH/FOMS for automated office equipment or switch port assignment (FOMS is the Frame Operations Management System that issues the automated office equipment orders to be worked), and to the Memory Administration Recent Change History (MARCH) for automated feature assignment. LFACS, SWITCH, and MARCH return status report messages to SOAC on loop and office equipment assignments as well as translation requests. SOAC then relays the information to MISOS.

According to Verizon NJ, approximately 90% of POTS orders flow automatically through LFACS, SWITCH/FOMS, and MARCH. The Assignment Provisioning Center (APC), the Facilities Management Center (FMC), the Network Administration Center (NAC), and the Recent Change Memory Administration Center (RCMAC) work the remaining orders that do not flow through the assignment and translation systems automatically. The orders that fall out of these systems take the form of a Request for Manual Assistance (RMA). An RMA is generated for an order when any conditions for flow-through are not met. The Provisioning Analyst Workstation System (PAWS) is used to monitor and distribute RMA work for office equipment or switch ports and loop assignments to the appropriate center. Translation system fall out also generates an RMA. TRACKER routes the translation RMAs from MARCH to the RCMAC.

Once the order is successfully assigned facilities and office equipment and has had the appropriate line translations provisioned, the orders that require a dispatch are automatically routed to the appropriate dispatch organization. POTS orders can be routed to the retail or wholesale Customer Service Center (CSC), or the NOC/DI. Dispatch centers are responsible for assigning orders to the correct Verizon NJ installation personnel and in some cases testing and turning up circuits for service.

Figure 10-1: Assignment and Translations for Non-Designed Services

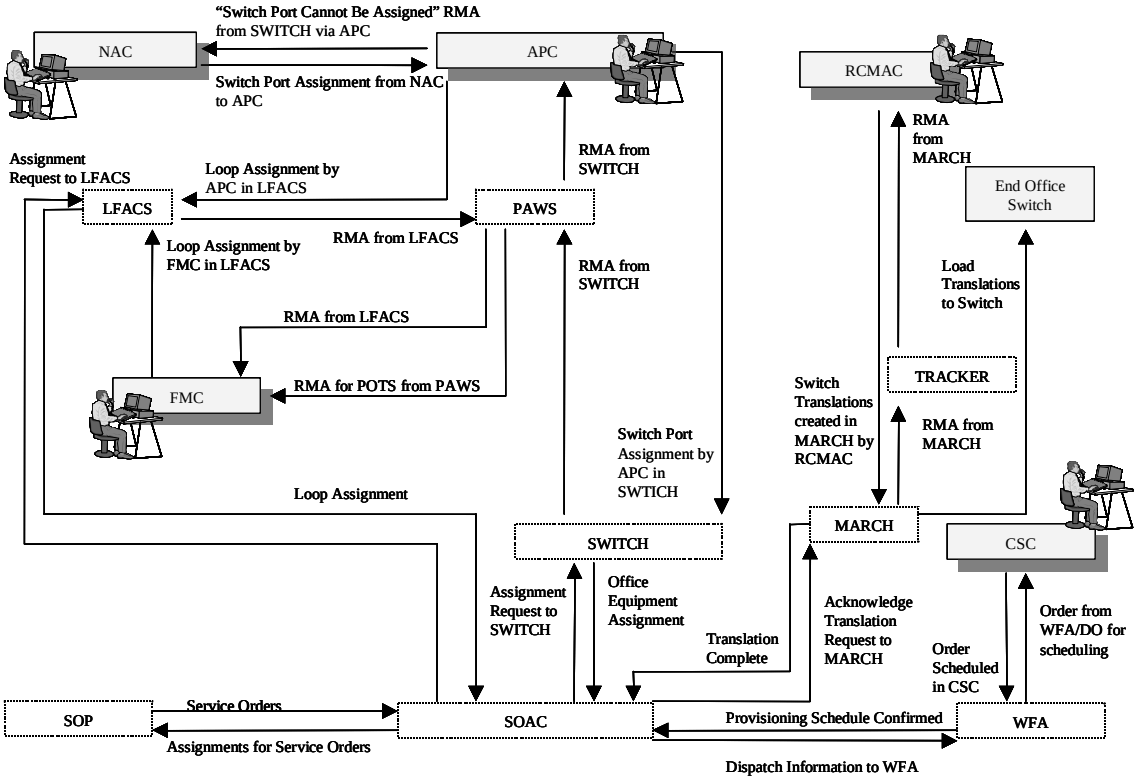

Special Services Orders

Pre-order transaction loop qualifications for high capacity circuits are performed by design engineers in the Circuit Provisioning Center (CPC). The retail business offices and the TISOC use RequestNet, which tracks DS1 or higher orders that are waiting for a response from an engineer to inquire whether facilities are available for high capacity circuits. The verification for availability of the loop assets for a high capacity circuit is conducted by the FMC, whereas the Verizon Inter-Office Facilities (IOF) group conducts the verification for availability of the IOF infrastructure for a high capacity circuit.

Loop orders for designed Special Services circuits flow from MISOS to SOAC. Special Services circuits can be designed in an automated manner, with SOAC controlling the progress of orders through the provisioning process.

Orders for Special Services circuits may fall out for manual handling in the assignment process, the circuit design process, and/or the translations process. As shown in Figure 10.2, manual handling of Special Services circuit provisioning is performed by the Circuit Provisioning Center (CPC), the FMC, the IOF group, and the RCMAC.

Once the order is successfully assigned facilities and office equipment and has had the appropriate line translations provisioned the orders that require a dispatch are automatically routed to the appropriate dispatch organization. Special Services orders can be routed to the retail or wholesale Dispatch Resource Center (CSC), the Special Service Center (SSC), or the NOC/DI. Dispatch centers are responsible for assigning orders to the correct Verizon NJ installation personnel and in some cases testing and turning up circuits for service.

Figure 10-2: Assignment, Circuit Design, and Translations for Designed Services

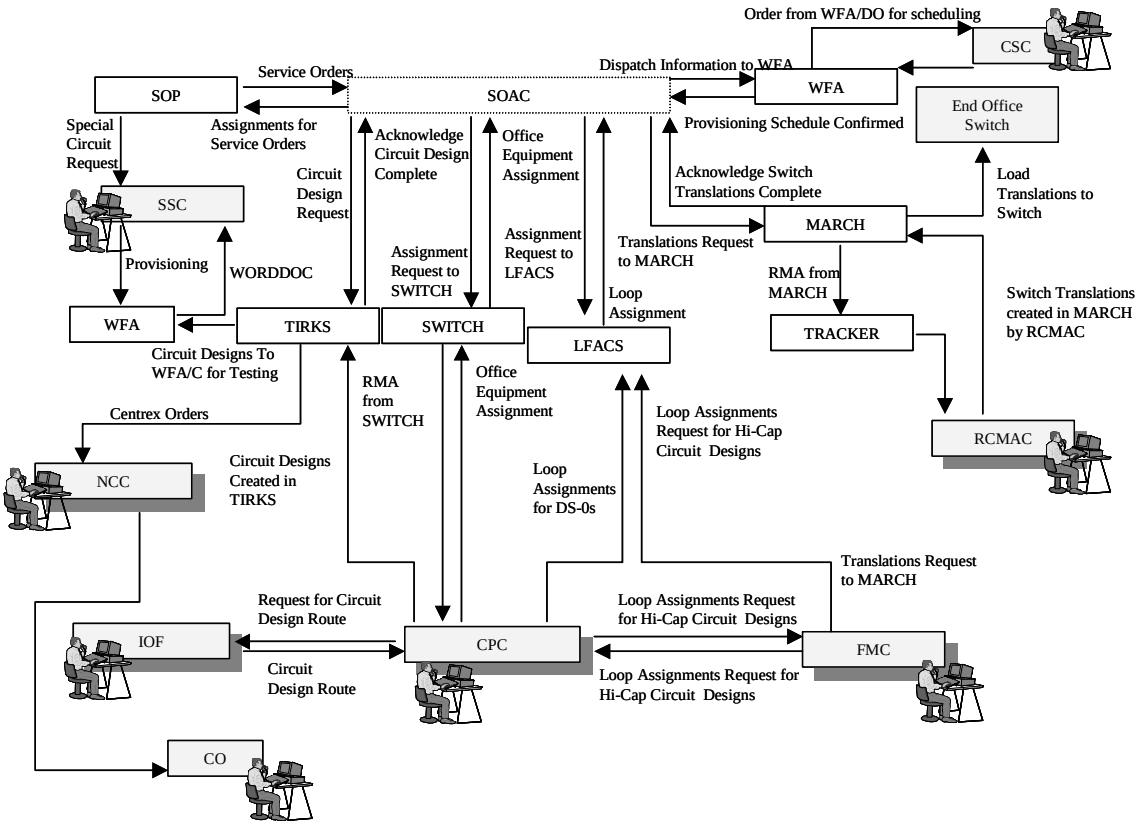

2.1.2 Provisioning Process Description – Work Center Roles

Verizon NJ employs a variety of work centers that work together according to the process flows illustrated in Figure 10-1 and 10-2. A more detailed description of the individual roles of each center is provided below.

Assignment Provisioning Center (APC)

Function of the APC

The primary function of the Assignment Provisioning Centers (APCs), formerly known as the Mechanized Loop Assignment Centers (MLACs), is to receive and work RMAs by assigning loops and switch ports for retail and wholesale POTS and Integrated Services Digital Networks (ISDN) Basic Rate Interface (BRI) services. The APCs also provide field assist support by supplying LFACS and SWITCH/FOMS information to technicians that request assistance during installation and maintenance work activities for both retail and wholesale orders. Field technicians also have the option of using Intelligent Field Access System (IFAS) terminals, which allow them to view orders and request and update facility assignments.

The APCs also perform cross-audits between LFACS and SWITCH/FOMS to eliminate discrepancies between these two databases. Every two weeks, one of the APCs foregoes RMA processing for one week and focuses solely on field assist support and database reconciliation activities.

Figure 10-3: Workflow Process in the APC

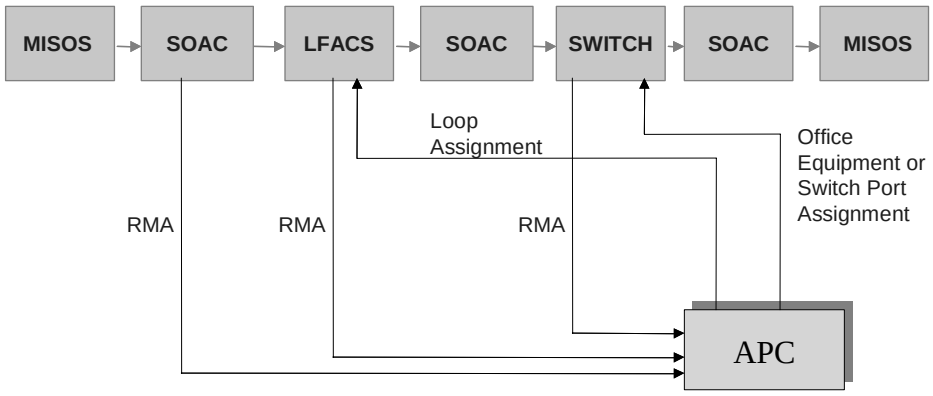

Orders for POTS and BRI ISDN are submitted to MISOS by the TISOC, the retail business offices, and by CLECs via either EDI or the GUI. MISOS distributes the orders to SOAC, which determines whether the order requires loop facilities and office equipment or switch ports. If a loop facility is required, SOAC directs the order to LFACS for automated loop assignment. SOAC is notified upon the completion of the loop assignment. If office equipment or switch ports are required, SOAC directs the order to the SWITCH operation support system for their assignment.

Office equipment or switch port assignments that fall out as RMAs are retrieved from the queue in the Provisioning Analyst Workstation System (PAWS) by Exchange Layout Assigners (ELAs) in the APC based on date due. PAWS is used for processing RMAs. Some loop assignments that fall out as RMAs are routed to the APC via PAWS while others are directly routed to the Outside Plant Engineering (FMC) Center. The APC processes all RMAs in the same manner, regardless of whether the order is for retail or wholesale. A POTS order may fall out for manual assignment for any of the following reasons:

- The cable pair is defective;
- Exact match errors where there is a problem with the service address information on the POTS order. LiveWire, LFACS, SWITCH, MISOS, and LMOS are used to resolve the discrepancy;
- The Telephone Number (TN) for the order appears in one of the databases as already assigned and working. This could occur if the previous service for a TN was disconnected out of LFACS but not out of SWITCH;
- The feeder pair is assigned to the wrong terminal because the house address on the order is incorrect or the terminal in LFACS is incorrect;

- Based on the cable pair assignment in LFACS, the SWITCH database may have a direct relationship to an OE that is not compatible with the live switch and/or central office equipment;
- Unable to Assign Complete Loop (UACL) errors where there is not a complete circuit from the Central Office (CO) to the Network Interface Device (NID) at the customer premise. If a complete loop to the service address NID does not exist, LFACS creates an RMA for the order using the UACL error code. The UACL RMAs are routed directly to the FMC. The APC has no involvement with these RMAs; or
- Interfering station errors where the LFACS operating system indicates that there is already existing service to the service address listed on the service order.

Service order writing errors are returned to the retail business offices or the TISOC as a clipboard in PAWS. Each individual customer care center is responsible for correcting their respective Error Service Order Inputs (ESOIs). Orders that are found to have loop assignment problems are sent to the FMC by the ELAs via PAWS. Orders that have office equipment or switch port assignment problems that require correction by the FOMS group or the Network Assurance Center (NAC) are enclosed in an electronic message called a "clipboard" by the ELAs and sent to the employee designated as the "packager" in the APC offices. The packager then reviews the clipboard message and sends it to the appropriate office, either the FOMS groups or the NAC.

Circuit Provisioning Center (CPC):

Function of the CPC

The CPC focuses on Special Services and is responsible for the assignment, tracking, designing, and delivery of these services into the field. The CPC does not have a role in provisioning UNEs for CLECs; however, it does participate in provisioning the Special Services circuits offered by Verizon NJ to CLECs through resale. The majority of the CPC's workload consists of retail Special Services orders. However, the CPC also processes Access Service Orders for small carriers. The CPC is responsible for the following:

- Assignment of loops and office equipment for Special Services orders that fall out of Verizon NJ provisioning automatic assignment systems;
- Design of circuits for carrier systems orders;
- Design of circuits for Special Services orders;
- Design of circuits for message trunk orders; and
- Company rearrangement orders.

The sequence of orders worked is determined within the CPC by the Record Issue Date (RID). The RID is one of the critical dates in the provisioning cycle for Special Services or Access Services Orders. The CPC's objective in the provisioning process is to create and distribute circuit designs to downstream provisioning organizations through the Trunk Integrated Record Keeping System (TIRKS) on or before the order's RID.

The CPC is organized into the following major functional groups:

- Service Order Entry Control (SOEC) – the SOEC group takes service orders from the retail, general, and large business offices and enters them into MISOS;
- Service Order Analysis & Control/Trunk Integrated Record Keeping System (SOAC/TIRKS) – the SOAC/TIRKS group administers RMAs for Special Services orders and Access Service orders;
- DS0 Design – the DS0 Design group designs DS0 circuits and issues the designs to the FMC. The DS0 Design group also provides field assistance. Analysts on the DS0 Design team attempt to issue designs on or before an order's RID date;
- High-Capacity Circuit Group – the High-Capacity Circuit Group designs DS1 and DS3 circuits and issues the designs to the FMC;
- Specials Mechanized Loop Assignment Center (SMLAC) – the SMLAC assigns loops and office equipment for Special Services orders that fall out of Verizon NJ provisioning assignment systems as RMAs. The SMLAC also provides field assist support to central office technicians and outside plant technicians;
- Company Inter-Office Facilities (IOF) Infrastructure – the Company IOF Infrastructure group designs IOF for Verizon NJ infrastructure and IOF for small carriers;
- Message (MSG) Design – the MSG Design group creates designs for message trunks;
- Company Rearrangements – the Company Rearrangements group creates designs for Verizon NJ initiated outside plant cable rearrangements.

The retail and resale provisioning workflow processes in the CPC are executed by the SOAC/TIRKS group, the SMLAC, the DS0 Design group, and the High-Capacity group.

Figure 10-4: Workflow Process in the CPC

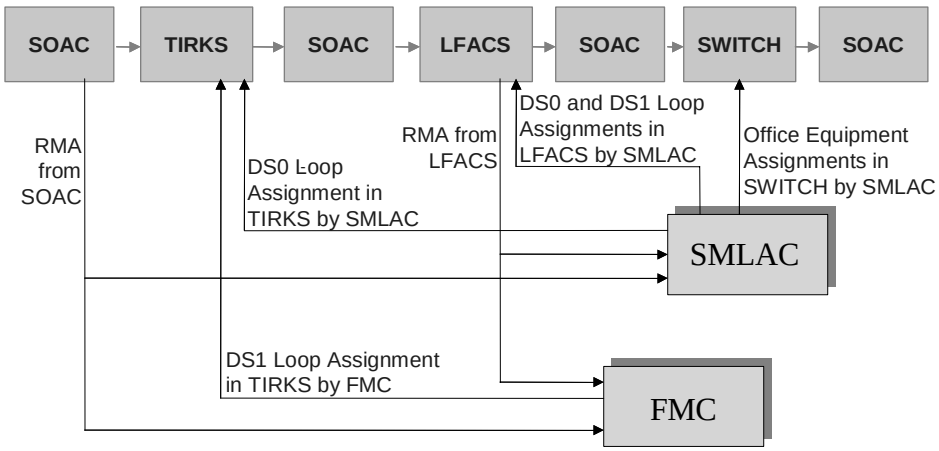

The workflow process for the CPC is explained below for each applicable functional group.

SMLAC Group:

The SMLAC assigns loops and office equipment for Special Services orders that fall out of the Verizon NJ provisioning assignment system as RMAs. Loop assignments for RMAs on DS0 circuits are handled by the SMLAC whereas loop assignments for RMAs on High Capacity circuits are routed to and handled by the FMC. High Capacity circuits automatically fall out of MISOS as RMAs because they are given an exception code stating manual assignment is required.

Special Services orders have the assignments performed by Verizon NJ provisioning systems in a flow-through manner. However, the SMLAC attaches the assignments for High Capacity circuits that are made by the FMC, to the High Capacity circuit orders. RMAs for DS0 orders are retrieved by the SMLAC Assignment Administrators (AA) through PAWS and are resolved by using LFACS and other Verizon NJ provisioning systems.

SOAC/TIRKS Group:

The SOAC/TIRKS group processes RMAs for Special Services orders and Access Service orders that are sent to the CPC by SOAC or TIRKS. There are hundreds of reasons for SOAC errors on Special Services orders; common reasons include:

- Typographical errors
- Insufficient information on the order
- Duplicate service
- Incorrect USOC codes
- The need for a table update to be made in SOP/DOE, TIRKS, or SOAC

The majority of RMAs are routed to the CPC by SOAC. RMAs are also routed to the CPC by TIRKS if the inventoried circuit for the order is already in use or if the objective dates on the service order are out of sequence.

The SOAC/TIRKS group attempts to resolve RMAs and enter the orders in TIRKS by the Scheduled Issue Date (SID), which is one day before the Loop Assignment Make-up (LAM) Date.

RMA work is processed on a first in, first out basis. SOAC and TIRKS route RMAs to the Process Control (PC) List that is a part of TIRKS called the Process Control Feature (PCF). The team leader monitors the PC List to track progress made by associates in processing RMAs. Associates pull down several orders at a time from the PC List to be worked as RMAs. For SOAC errors on Special Services orders, an associate will access SOAC to review the order and determine the error. The associate may have to call the appropriate business office to get information for correcting the error. Once the error is corrected, the order is submitted back to SOAC where it will then flow into TIRKS. An associate corrects TIRKS errors on a Special Services order or an Access Services order.

DS0 Design Group:

The DS0 design group within the CPC is responsible for designing the DS0 circuits and issuing them to downstream provisioning organizations. DS0 orders are received by the CPC via the PC List, which is a system within TIRKS called the PCF. The design process for a DS0 circuit consists of assembling the required components for the circuit, including the following:

- Loops
- Frame formatting and line coding
- Test equipment in the COs and at the customer premise locations
- Plug-ins on repeater bays in the COs
- Connecting Facility Assignments (CFAs) on 1/0 Multiplexors (MUXs) and on digital signal cross connect frames (DSX-1)
- Tie pairs on cross connects
- IOF
- Office Equipment (if applicable)
- Translations requirements (if applicable)

The DS0 components are assembled from inventories in TIRKS. Designs for DS0 orders are attempted by TIRKS. However, when a circuit design cannot be completed by TIRKS because of an error or problem with components of the design, the order will fall out to either the Facilities Pending Date (FPD) or Facility Exception (FE) list in the PCF system. Orders are routed to the FPD list when there is a problem with the loop or cable pair assignment for the design. Orders are routed to the FE list when the following design problems occur:

- There is no spare test equipment for the circuit.
- There is no spare repeater for the circuit.
- The loop facility is too long.
- The circuit is on a Subscriber Loop Carrier (SLC) system and the loop carrier plug-in is not populated correctly.
- The Network Channel Interface (NCI) codes may be incorrect for the order.
- The carrier system channel for the circuit is used.

Analysts on the DS0 design team attempt to issue a design on or before an order's RID date.

High-Capacity Circuit Group:

The High-Capacity group designs the DS1 and DS3 circuits and issues them to downstream provisioning organizations. Hi-Cap designs are received by the CPC via the PC List of the PCF system. The design process for a DS1 or DS3 circuit consists of assembling the required components for the circuit, including the following:

- Loops
- Frame formatting and line coding

- Test equipment in the COs and at the customer premise locations
- Plug-ins on repeater bays in the CO
- CFAs on 3/1 MUXs and on digital signal cross connect frames (DSX-1, DSX-3) or digital access cross connect frames (DCS)
- Tie pairs on cross connects
- Fiber MUXs and Synchronous Optical Network (SONET) specifications if the loop circuits are fiber
- IOF
- Office Equipment and translation requirements for ISDN Primary

The DS1 and DS3 circuit components are assembled from inventories in TIRKS. Designs for both types of orders can be accomplished by TIRKS in an automated manner but the designs are still reviewed by a DS1 or DS3 design analyst. Loop assignments for DS1 and DS3 circuits are performed by the FMC. IOF design is most frequently provided by the IOF center. The FMC provides the fiber loop circuit design details to the CPC.

Analysts on the DS1 and DS3 design team attempt to issue designs by an order's RID date. Most of the designs produced by the Hi-Capacity Circuit Group are for DS1s.

Outside Plant Engineering (FMC) Center

Function of the FMC

The FMC is responsible for outside plant engineering, including:

- Allocation and assignment of loop assets to meet the requirements of a provisioning order;
- Design of new loops; and
- Detailed engineering design of IOF infrastructure that are driven by high level engineering design requirements from the Verizon IOF group.

The FMC becomes involved in the provisioning process when an order for POTS, Special Services, or Access Services falls out of LFACS as an RMA.

The FMC is organized into groups according to functionality such as High Capacity circuits, DS0, fall outs, Digital Subscriber Lines (xDSL), Asymmetric Digital Subscriber Lines (ADSL), Subdivision, and Transportation. The FMC performs the following functions:

- Processes RMAs for loop assignments that fall out of Verizon NJ's automatic provisioning systems to the FMC due to a problem with loop facilities or a lack of loop facilities for an order. RMAs are processed for POTS and Special Service orders;
- Creates engineering designs of new loops that are driven by demand from a CLEC or an Inter-Exchange Carrier (IXC);
- Creates engineering designs of new IOFs driven by requirements from the IOF Center to increase Verizon IOF infrastructure;

- Creates engineering designs of new loops (F1s only) to keep pace with growth requirements defined by Verizon network planners in Baltimore;
- Creates drafting development and maintenance of Plat maps and development of blueprints for the construction of new loops and new IOF; and
- Performs transaction demand driven loop qualifications for ISDN, ADSL, DS0, DS1, and DS-3.

Figure 10-5: Workflow Process in the FMC

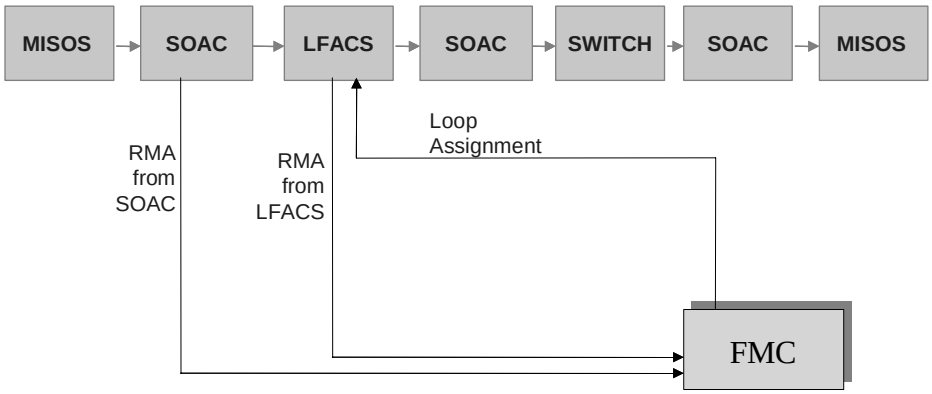

<u>POTS and Basic ISDN Services:</u>

Loop Assignment RMAs for POTS are routed to the FMC by the APC or the Regional CLEC Coordination Center (RCCC) through PAWS. LFACS can also automatically route RMAs for POTS to the FMC. For Special Services, MISOS and LFACS automatically route RMAs to the FMC. There are 12 LFACS error codes that cause an RMA to be routed to the FMC. Currently, the most common error codes that cause an order to fall out to the FMC are:

- Unable to Assign a Complete Loop (UACL)
- Terminal is Restricted
- No Serving Terminal Exists
- Committed Pair is Defective

RMAs for POTS and ISDN Basic services within the FMC are targeted to process on due date minus one. One ELA in the FMC is assigned responsibility for periodically consulting PAWS and printing RMAs that were routed to the FMC. RMAs on POTS and ISDN Basic services are then distributed to the Specialists in the FMC for working based on date due. The Specialist that works the RMA acts as the Single Point Of Contact (SPOC) for that trouble. The Specialist creates an Assignment on Cable Record (ACR) report that provides the cable count at the customers serving terminal to determine the availability of spare cable pairs. The Specialist runs a defective pair report to list defective pairs at the serving terminal. If operational spare pairs are not available, or if a defective pair is repaired, the Specialist issues a Clear Defective Pair Request to the CSC.

In the event the Specialist is not able to provide a complete circuit, the order goes to a design engineer within the FMC for construction and if necessary, a new due date is negotiated with the customer through the Dispatch Resource Center. The design engineer issues a work order to construction. Once the construction is complete, an ELA is notified to update LFACS and assign the cable pair to the order. ELAs and Specialists attempt to have assignments for POTS and ISDN orders completed 24 hours before the date due.

Special Services:

The FMC processes RMAs, for DS0 loops and Service Requests (SRs), from the LFACS, in accordance with the LAM dates for these types of orders. The procedures that ELAs and Specialists perform for a DS0 RMA is the same as those performed for a POTS RMA**.** Some typical RMA errors for DS0 loops are as follows:

- The existence of facilities or bridge taps on the loop;
- The facility is part of a SLC system but no design slots were specified;
- There are no isolated pairs for the facility from the Service Access Cabinet (SAC) box to the serving terminal; and
- The terminal that serves the customer is full.

The FMC does not receive many RMAs for DS1s, but when they do occur, it is typically due to the UACL error. An RMA for a DS1 is processed by an ELA and a design engineer.

Loop qualifications are performed by drafters in the FMC. The retail general and large business offices and the TISOC use RequestNet to inquire whether facilities are available for high capacity circuits. The verification for availability of the loop segments of the high capacity circuit is conducted by the FMC. The verification for availability of the IOF segments of the high capacity circuit is conducted by the IOF group. The FMC and the IOF group have 48 hours to respond to a RequestNet inquiry from the business offices or the TISOC.

Inter-Office Facilities (IOF) Group:

Function of the IOF Group

The IOF group is responsible for network engineering planning and provisioning for Verizon's operations network. The IOF group has three primary functions:

- Capacity Planning – The IOF group has capacity planners that plan network capacity for Verizon North and South. Network planners use network traffic reports and forecasts from market facing groups to develop a network capacity plan with a rolling one year forecast.
- Capacity Management – Network planners on the Capacity Management team manage network capacity in the short term. On the Capacity Management team, network planners are responsible for geographic areas within New Jersey. Network planners analyze weekly network traffic reports for their respective geographic areas so that IOF carrier systems can be proactively deployed to keep up with transport traffic demands.
- Provisioning – The provisioning team provisions carrier systems and the IOF circuit components for Special Services high capacity circuit designs. The IOF group has DS1 and DS3 provisioning teams that cover New Jersey.

Workflow Process in the IOF Group

Using RequestNet, the retail business offices, the Carrier Account Team Center (CATC), and the TISOC make pre-order inquiries to the IOF group to verify whether there is availability for DS1, DS3 circuit orders, and carrier system orders. Once an order is submitted for a DS1 or DS3 circuit, the IOF group's involvement in the provisioning process is on an exception basis only. "A" and "Z" central office locations are specified in orders for high capacity circuits. The Primary Digital Access Cross-Connect (PDAC) route or Synchronous Optical Network (SONET) ring channels for a high capacity circuit and the terminating equipment in each central office from the "A" to the "Z" location may already exist as available inventory in TIRKS. If the inventory is available, TIRKS designs the circuit in an automated manner and the CPC, the CATC, or the RCCC verifies the correctness of the design, potentially without any IOF group involvement. If the PDAC does not exist, or if the PDAC exists but has no spare capacity, the high capacity circuit order falls out to the IOF group as an RMA.

The IOF group's goal is to issue circuit designs for RMAs by the RID. RMAs are distributed to DS1 and DS3 provisioning engineers within the IOF group via the PC LIST in TIRKS. Engineers work to find existing, or create alternate, PDACs that satisfy the circuit requirements by the RID date. However, there are occasions where new carrier systems and/or rings must be completed in order to provide a viable PDAC for DS1 and DS3 circuit orders.

Recent Change Memory Administration Center (RCMAC)

Function of the RCMAC

The RCMACs are part of Verizon NJ's Network Operations Centers (NOCs) and are responsible for putting line translations into class 5E, DMS, Siemens, and Advanced Intelligent Network (AIN)/ISDN switches based on service order requirements. The RCMAC staff enters line translations into Verizon NJ's MARCH system, which, in turn loads programming into class 5E, DMS, Siemens, and AIN/ISDN switches.

There are three RCMACs in New Jersey located in Williamstown, Freehold, and Totowa. The RCMACs process orders that fall out of the flow-through process. Orders generally fall out for two reasons:

- Switch rejects

- Orders designated for manual handling

An order that falls out of the automated translation process is routed to the RCMAC as a RMA. The RCMAC staff is also responsible for handling field assist calls from technicians and for participating in coordinated Hot Cuts. The majority of the line translation work performed by RCMAC clerks is on Centrex orders that are designed to fall out for manual translations. Additional translations work primarily includes the following:

- To and From (T&F) orders;
- Multi-line hunt group orders;
- ISDN Basic orders;
- Primary Inter-Exchange Carrier (PIC) changes;
- Feature changes;
- Adding Direct Inward Dialing (DID);
- New lines;
- New and additional lines;
- Disconnects;
- VMAPPA orders (orders to build voice mailboxes);
- Orders requiring triggers (AIN based) including hot cuts and Local Number Portability (LNP) only orders.

Figure 10-6: Workflow Process in the RCMAC

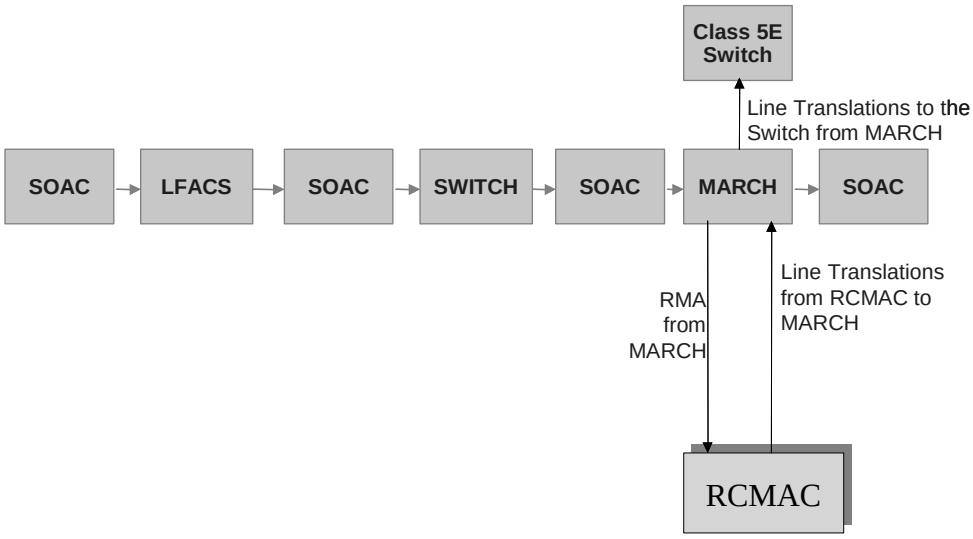

POTS and Basic ISDN Services:

After loop and office equipment or switch port assignments are completed, the next stage in the provisioning process for non-designed services is the creation and loading of translations into the switch. POTS orders may have the translations created by the MARCH system in an automated manner. However, a small percentage of POTS orders are designed to fall out and others fall out due to problems in the flow-through line translation process and become RMAs. These orders are routed to the RCMAC for manual handling by Translation Administrators (TAs). TAs correct RMA orders in MARCH. The causes for translation RMAs on POTS orders include errors on the order such as the following:

- Working office equipment
- Working telephone number
- Incorrectly keyed feature
- Incompatible features

For inward orders, TRACKER assigns the review date as the date due. The scheduled time for MARCH to release translations into the switch for inward orders is between 2:00 a.m. and 4:00 a.m. on the date due. However, orders for new lines are loaded by MARCH into the switch on the day before the due date (DD-1) to ensure that the translations are in the switch on the morning of the due date.

The review date for an LNP order is two days before the due date (DD-2). On DD-2, the RCMAC sets an unconditional trigger and verifies that there is a disconnect order for the account. LNP orders are translated as disconnects and are scheduled to complete one day after the due date (DD+1) to allow for a switch back to the original configuration if problems occur or if the order is postponed. The one exception is lines that cannot have a trigger set are worked as Hot Cuts and the disconnect is coordinated with the RCCC. The TA places a Hot Cut order into delayed hold status on DD-2 to prevent the order from automatically completing on the due date.

Special Services:

Special Services orders that require translations are designed to fall out for manual handling in the RCMAC. These include orders for Centrex, Hometown Plus, DID, and ISDN, among other complex services, which are routed to the RCMAC by MARCH through TRACKER, the RCMAC's work management system. TRACKER queries MARCH every half-hour for orders that require manual handling and queues the orders to be worked by due date. TAs, who are assigned two to four central offices each, perform line translations work on the Special Services Orders retrieved from TRACKER for their respective COs.

Network Administration Center (NAC)

Function of the NAC

There is one NAC in Irvington, NJ with a satellite office in Collingswood, NJ. The Collingswood center administers ISDN service requests for all switch types. The Irvington center performs the following functions:

- Telephone Number (TN) Administration;
- Centrex/Direct Inward Dialing (CTX/DID) Administration;
- Office Equipment (OE) Administration;
- Integrated Subscriber Loop Carrier (ISLC) Equipment Administration;
- Line Administration;
- Switch Capacity Administration;
- Trunk Administration;
- Data Base Integrity; and
- RMA processing.

Workflow Process in the NAC

PAWS routes RMAs to the APC for processing for POTS orders containing the "Switch Port Cannot Be Assigned" RMA code. The APC subsequently sends these RMAs to the NAC for resolution. As soon as the switch port problem is resolved for a retail or wholesale RMA, the switch port assignment information is sent by the NAC to the APC via PAWS for processing.

Dispatch Resource Centers (CSC)

Function of the CSCs

The Dispatch Resource Centers (CSCs), formerly the Customer Service Centers (CSCs), are organized as wholesale and retail centers. In addition, there is a separate group called the Proactive Preventative Maintenance (PPM) group that is responsible for conducting proactive preventative maintenance.

<u>CSC Wholesale:</u>

The Wholesale CSC is responsible for dispatching on installation and maintenance for special services and unbundled loops for CLECs for the state of New Jersey. The CSC's Wholesale office is responsible for CLEC and IXC orders and trouble tickets. The Regional CLEC Maintenance Center (RCMC) is responsible for wholesale repair calls.

A service team organizational model is employed by organizing team members according to job function and skill set. The CSC Wholesale office is broken down into the following module groups:

- Completion Control - Dispatches field technicians on specials and Unbundled Network Elements (UNE) repairs and provisioning jobs;
- Screening - Manages work orders and troubles that require human intervention;
- Service Order Updating - Processes service orders that fail to auto complete;
- Night Duty- Shift begins after 5:00 p.m. Fields medical emergency calls, call outs, or any major alarms.

CSC Retail:

The CSC Retail office is responsible for scheduling outside plant installation and maintenance dispatches for the Verizon NJ retail residential and business customers.

A service team organizational model is employed, organizing team members by job function and skill set. The CSC Retail office is broken down into the following ten module groups:

- Service Order and Provisioning - Handles service orders;
- Red Phone/Customer Care - Receives calls from customers that have pending or completed service orders within the last seven days;
- Verizon Connections Solutions (VCS) - Handles maintenance that sub-contractors perform;
- Results Analysis - Performs analysis and tracking reports for the Dispatch Resource Center (CSC);
- Screening and Testing - Manages trouble reports that require human intervention;
- Enhanced Services - Processes service orders that involve cut-overs with five or more lines;
- Results Analysis - Performs analysis and tracking reports for Special Services Center (SSC);
- Administrative - Administers payroll, time and supplies;
- Night Duty – Shift begins after 7:00 p.m. Fields medical emergency calls, call outs, or any major alarms; and
- Workflow Process in the CSCs (POTS and Special Services).

CSC Wholesale:

The process begins with the TISOC, which receives CLEC orders. The role of the CLEC Loop Provisioning Center (CLPC) is to resolve any up front provisioning problems. The CSC Wholesale office takes the order from the CLPC when the order is ready for dispatch.

A service order requiring coordination between Verizon NJ centers is marked with a Frame Date Time (FDT). If the FDT field is marked, the clerk will work the order as a coordinated cut. The assigned clerk initiates the interaction with the Regional CLEC Coordination Center (RCCC), which is the lead coordinator, and further coordinates the order by making sure all groups required for the completion of the order are involved. The CSC clerk also verifies that there is no outstanding pending work. The clerk that begins working the order will remain assigned to it until the order is completed. Interaction between different Verizon NJ teams is conducted via telephone calls and email.

A request for an expedited order flows from either the TISOC or the CLPC to the CSC Wholesale. The TISOC receives an abnormal request for a service order to be escalated. When the TISOC calls into the CSC Wholesale, a prompt on the center's automated answering system directs the call to UNE Escalations. The Team Leaders handle these requests on a case –by case basis.

CSC Retail:

The Repair Service Clerk (RSC) receives service orders from the Business Office via MISOS. The RSC pulls the order from MISOS and process it through LFACS for facility assignment. After the circuit is assigned facilities, the Work Force Administration Dispatch Out (WFA/DO) system determines if a dispatch is required. If a dispatch is necessary, the clerk schedules the dispatch. If a dispatch is not necessary, the service is completed by entering the order completion process. Once the CLPC resolves up front provisioning problems and the order is ready for dispatch, the CSC takes over. Work is prioritized based on due date for the pending task.

The Service Order Exception Notifier (SOEN) identifies orders that contain errors. Clerks known as Updaters keep Team Leaders informed of the status of exceptions.

Special Services Center (SSC)

Function of SSC

The SSC is responsible for coordinating the installation and maintenance of Special Circuits for Verizon Retail Tier 2 customers in New Jersey.

The SSC is divided into provisioning and maintenance teams. The Provisioning group is further divided into subgroups specializing in Analog, Digital Sub-rate, and Hi-Cap services. The Analog subgroup is responsible for provisioning analog 4-wire data, voice specials for PBX, DID, DOD and 911 circuits. The Digital subgroup is responsible for provisioning digital high-speed data/xDSL, digital data 56k, basic ISDN (if a repeater is required), private lines, and Frame Relay Service (FRS). The Hi-Cap subgroup is responsible for provisioning DS1, DS3, ISDN PRI, and any digital circuits riding DS1's or DS3's. The Maintenance group is divided into analog and digital subgroups.

Workflow in the SSC

The SSC receives service orders from the CPC. Orders in the SSC are driven by a series of critical dates:

- Due date - Order is scheduled for completion for the customer;
- Plant test date (PTD) - Order is ready for technician dispatch;
- Wire Out and Test (WOT);
- Frame Completion Date (FCD) - Order testing is complete;
- Record Issue Date (RID) - Order design is ready.

The SSC receives loop orders from the Centralized Order Group (COG), authorized vendors, and Line Of Business (LOB) (Enterprise and General) offices. If a General Business Service (GBS) customer orders a special circuit, the order is processed through the SSC. The majority of orders are for ISDN PRI or from vendors managing their customer's telecommunication requirements. The SSC also processes orders for special circuits that are designed at the CPC; once the CPC completes the design work, the order is loaded at the SSC and the CSC. After an order is issued in MISOS, it flows into TIRKS and WFA/C. The order is simultaneously distributed to the SSC, CSC, and CO for notification of special wiring, if applicable. A Work Order Record Design Document (WORDDOC) is created in WFA/C that details the intervals, design, test equipment, and assignments for engineered services. The SSC uses WFA/C, WFA/DO and WFA/DI for provisioning. Work orders sent to the SSC are reviewed and distributed to work groups according to the type of service ordered. Orders are usually received on the Work Start Date (WSD). If there is a problem with the design of a circuit, the SSC contacts the CPC who works with the IOF group to resolve the problem. The first date the SSC reviews is the FCD. On the FCD, the SSC initiates CO-to-CO tests for the circuit. Once the test is complete, the next critical date is the PTD. On the PTD, the SSC calls the CSC to dispatch a technician to the customer's premise and perform a continuity (customer premise to switch) test. The SSC uses SERVICE, HEKIMIAN 2001, or TPI 570 for testing. If the test results indicate a facility problem, the SSC usually resolves the problem within one day.

For Frame Relay Service (FRS), the SSC's responsibility is to provision and test the loop, usually a DS1. The SSC tests for 56kbps or 64 Centi Call Seconds (CCS). Once the test is complete, the SSC forwards the order to the Digital Services Center (DSC) for equipment assignment and specific FRS parameter testing. The SSC uses the HEKIMIAN test system for testing DS1 and DS3 Hi-Cap circuits and establishes the remote test point(s) to the Digital Cross Connect (DXC). The SSC calls the customer to inform them that a technician will be on site and to ensure that the customer site is ready.

If testing is successful, the SSC turns-up the service on the PTD. Once the service is turned up successfully on the PTD, the SSC contacts the customer to inform them that the service is turned up. The on-site technician also notifies the customer that the service is turned up. If the customer is not available for notification on the PTD, the SSC calls the customer on the due date.

Network Operations Center (NOC)

Function of the NOC

The Verizon NOC is responsible for provisioning and maintaining the Verizon switching network infrastructure. The NOC is responsible for maintaining network routing and surveillance, switch translations, and CO activity. The NOC functions for Verizon NJ are performed by centers located in Freehold, NJ and Madison, NJ. Four groups perform the functions in the NOC:

- Service Assurance is responsible for Network Surveillance 24 hours a day, seven days a week and analysis;
- NOC Dispatch In (NOC/DI), also known as the SPOC, is responsible for coordinating activity in and out of Verizon COs from various Verizon organizations. The NOC/DI does not work with any CLECs or Inter-Exchange Carriers (IXCs);
- Order Fulfillment is responsible for provisioning, trunk provisioning, switch translations, and three and six digit code translations;

- Service Maintenance performs maintenance on lines and trunks.

Workflow Process in the NOC

The flow of work into and out of the center for each of the groups that comprise the NOC is as follows:

- Service Assurance - Monitors and analyzes 220 switches, backup power, voice mail, ADSL, and cable alarms to insure they are operating properly. Creates reports on the individual components of the switches; creates abnormal reports when a switch failure occurs that meets the criteria of an unplanned or Federal Communications Commission (FCC) reportable outage;
- NOC/DI or SPOC - WFA downloads from the TIRKS to CO personnel;
- Order Fulfillment - Responsible for provisioning, testing equipment, facility turn up, and handling RequestNet for Primary Rate Interfaces (PRIs); and
- Service Maintenance - Process line troubles for customers and the Regional CLEC Service Center (RCSC). Technicians work tickets in WFA Dispatch In (WFA/DI).

2.2 Scenarios

Scenarios were not applicable to this test.

2.3 Test Targets & Measures

The test target was Verizon NJ's Provisioning Process, which included reviews of the following sub-processes:

- Order entry (Verizon NJ internal)
- Workflow management
- Workforce management
- Assignment
- Service activation
- Service design

2.4 Data Sources

The data collection performed for this test centered on interviews, direct center observations, and reviews of documentation supplied by Verizon NJ at the request of the Test Manager. The sources of data for this test include Methods and Procedures that support specific products throughout the provisioning process.

2.4.1 Data Generation/Volumes

This test did not rely on data generation or volume testing.

2.5 Evaluation Methods

The Provisioning Process Evaluation (PPR10) was conducted through a series of visits to Verizon NJ centers involved in the provisioning process. Directors, first level managers, and front-line employees were interviewed to develop an understanding of the functions within each center.

Before conducting the test, a structured interview questionnaire and detailed evaluation criteria were developed to facilitate the process and ensure a consistent approach. KPMG Consulting test evaluators received detailed information during interviews/walk-throughs regarding the center's processes, systems, documentation, and employee execution of the work. The interviewees received a summary of the interview notes and were given the opportunity to provide comments or clarification as appropriate.

During the interview process, each work group was asked if the systems used in their center differentiated between wholesale and retail in the processing and distribution of orders. KPMG Consulting observed the various queues of work in each of these centers. KPMG Consulting reviewed Verizon NJ provisioning process and system documentation.

2.6 Analysis Methods

The Provisioning Process Evaluation (PPR10) included a checklist of evaluation criteria developed during the initial phase of the Verizon NJ OSS Evaluation. These evaluation criteria provided the framework of norms, standards, and guidelines for the Provisioning Process Evaluation (PPR10).

The data collected were analyzed employing these evaluation criteria, which are identified in Section 3.1 below.

3.0 Results

This section identifies the evaluation criteria and test results.

3.1 Results Summary

The results of this test are presented in Table 10-2 below.

Table 10-2: PPR10 Evaluation Criteria and Results

Test Reference	Evaluation Criteria	Result	Comments
Parity in Systems			
PPR10-1	Inputs to the engineering system(s) are prioritized using the same method for retail and wholesale.	Satisfied	Inputs to the FMC, CPC, and IOF group are generated by the TISOC and retail business office sending provisioning orders. The systems used by the engineering centers prioritize orders based on critical dates and are the same for both retail and wholesale. KPMG Consulting observed engineering center personnel accessing both retail and wholesale orders from TIRKS according to critical date.

Test Reference	Evaluation Criteria	Result	Comments
PPR10-2	The method for prioritizing orders in the engineering center for retail circuit system(s) is the same as those used for resale circuit provisioning.	Satisfied	The FMC uses the same systems for retail and resale; jobs are systematically prioritized by Due Date. KPMG Consulting observed engineering center personnel interacting with the same systems for both retail and wholesale. The following engineering center documents are used for both retail and wholesale: ◆ DS0 Regional Flowchart ◆ RMA Resolution Flow (SMLAC) ◆ SOAC/TIRKS Resolution Flow (SMLAC-1)
PPR10-3	The method for prioritizing orders in the engineering center for retail circuit system(s) is the same as those used for UNE circuit provisioning.	Satisfied	The FMC is the engineering center for POTS and Basic ISDN. The CPC and IOF groups are responsible for the design and allocation of Special Services orders. All of the centers use the same systems regardless of UNE or retail classification. KPMG Consulting observed engineering center personnel interacting with the same systems for both retail and wholesale. The following engineering center documents are used for both retail and wholesale: ◆ DS0 Regional Flowchart ◆ RMA Resolution Flow (SMLAC) ◆ SOAC/TIRKS Resolution Flow (SMLAC-1)

Test Reference	Evaluation Criteria	Result	Comments
PPR-10-4	Outputs from the engineering system(s) are prioritized using the same method for retail and wholesale.	Satisfied	The FMC uses LFACS, AARDWOLF, and EWOMS. The CPC and IOF group use TIRKS and LFACS. These systems process and distribute circuit designs in the same manner for both retail and wholesale. Work in the FMC is systematically prioritized on a due date basis. TIRKS systematically prioritizes orders based on critical dates determined by each team within the CPC. The service order group prioritizes orders based on the Schedule Issue Date (SID). LFACS prioritizes base on due date. KPMG Consulting observed engineering personnel access and work orders according to due date. Once the necessary work was complete for an order, the engineering personnel closed the order at which point the order could be considered an output of the engineering center.
PPR10-5	Inputs to the inventory system(s) are prioritized using the same method for retail and wholesale.	Satisfied	The NAC interacts with the majority of Verizon provisioning centers to establish the day-to-day inventory of the New Jersey region. Data are submitted to the inventory system via Lotus Notes, telephone, and fax for both retail and wholesale. The inventory center also processes RMAs. PAWS routes RMAs for POTS orders with the "Switch Port Cannot Be Assigned" RMA code to the APC for processing. The APC subsequently sends these RMAs to the NAC for resolution. Input to the NAC is administered consistently between retail and wholesale. RMAs are prioritized according to due date within the PAWS system. KPMG Consulting observed inventory personnel accessing RMAs from PAWS according to due date. KPMG Consulting observed the NAC method of receipt for wholesale and retail assignment orders. All the orders were received via telephone or fax and processed in the same manner regardless whether they were wholesale or retail orders.

Test Reference	Evaluation Criteria	Result	Comments
PPR10-6	The inventory group's method for monitoring the NJ network is the same for retail and wholesale.	Satisfied	The NAC monitors utilization and inventory of TNs and office equipment; line balance load for each CO; networks switch surveillance; and generation of RMAs. Inventory management and RMA resolution is handled in the same manner for both retail and wholesale customers. KPMG Consulting observed inventory center personnel interacting with the same systems for both retail and wholesale. The Bellcore Provisioning Service Order Methods and Procedures Volume 1 (VZN DOC# BR 753-303-433) is used for both retail and wholesale.
PPR10-7	The method for prioritizing orders in the inventory group system(s) is the same for retail and wholesale.	Satisfied	The NAC receives the "switch port cannot be assigned" RMAs from the APC in the order that the APC pulls them from PAWS. PAWS is a due date driven distribution system. The NAC personnel process each RMA until the problem has been resolved. The NAC uses the same systems for retail and wholesale. KPMG Consulting observed inventory center personnel access and work both retail and wholesale orders from PAWS according to critical date. The NAC Information (VZN DOC Name Introduction Page_Item194.doc) is used for both retail and wholesale:.

Test Reference	Evaluation Criteria	Result	Comments
PPR10-8	Outputs from the inventory system(s) are prioritized using the same method for retail and wholesale.	Satisfied	All methods and systems used to communicate with other Verizon provisioning centers are the same for both retail and wholesale. KPMG Consulting observed inventory personnel access and work orders according to due date. Once the necessary work was complete for an order, the inventory personnel closed the order at which point the order could be considered an output of the inventory center. Once the NAC resolves the RMA trouble by assigning an available switch port, the order is sent back to the APC where it can be re-entered into the provisioning flow by the TISOC.
PPR10-9	Inputs to the facilities system(s) are prioritized using the same method for retail and wholesale.	Satisfied	SOAC systematically distributes orders for facility assignment to LFACS, SWITCH, and TIRKS. LFACS records and stores outside plant POTS facility (loop) records while SWITCH does the same for office equipment and switch ports. TIRKS stores circuit design information for Specials Service records. SOAC systematically prioritizes and distributes orders according to the sequence orders were input into the system. These records are administered and processed consistently between retail and wholesale. KPMG Consulting observed facility center personnel accessing both retail and wholesale orders from LFACS, SWITCH, and TIRKS according to critical date.

Test Reference	Evaluation Criteria	Result	Comments
PPR10-10	The method for prioritizing orders in the facility group system(s) is the same for retail and wholesale.	Satisfied	Facilities are handled by the APC, FMC, CPC, and IOF groups. The facility groups are responsible for the design and allocation of circuits and the resolution of RMAs that fall out of the automated provisioning process. In the APC and FMC, RMAs are received from PAWS. PAWS systematically distributes work on a due date basis. In the CPC, RMAs are typically received from SOAC, which systematically distributes orders based on first in first out. The CPC can also receive RMAs from TIRKS. In the IOF group, RMAs are received from TIRKS, which is Record Issue Date (RID) driven. Work in the CPCs and IOF groups is prioritized by (RID). The design process and the circuit allocations are due date driven in the APC and FMC, while it is RID driven in the IOF group and CPC. These centers use the same systems for retail and wholesale. The following facility group documents are used for both retail and wholesale: ◆ MLAC Handbook ◆ DS0 Regional Flowchart ◆ RMA Resolution Flow (SMLAC) ◆ SOAC/TIRKS Resolution Flow (SMLAC-1) ◆ Plant Assignment Clerk RCCC M&Ps KPMG Consulting observed facility center personnel access and work both retail and wholesale orders from the same systems according to critical date.

Test Reference	Evaluation Criteria	Result	Comments
PPR10-11	Outputs from the facilities system(s) are prioritized using the same method for retail and wholesale.	Satisfied	SOAC processes and systematically distributes orders to the facility-based systems. LFACS, SWITCH, and TIRKS receive the requests from SOAC and the facility orders are completed using these systems. Once the work flows completely through the facility systems it is re-entered into SOAC. Work received from the SOAC system is administered on a first in first out basis, both LFACs and SWITCH execute work based on the order it was received, therefore, work is re-entered into SOAC upon its completion. TIRKS completes work according to its RID date, completed RMA orders are returned to SOAC based on the RID. Neither LFACs, SWITCH, nor TIRKS differentiate between retail and wholesale. KPMG Consulting observed facility center personnel interacting with LFACS and SWITCH for both wholesale and retail.
PPR10-12	Inputs to the translation system(s) are prioritized using the same method for retail and wholesale.	Satisfied	SOAC is responsible for administering translation requests to the MARCH system. MARCH processes automated translations based upon switch types, and if manual work is required RMAs, then MARCH distributes it to TRACKER. SOAC systematically prioritizes and distributes orders according to the order the work is received. Orders are processed and distributed by the SOAC system consistently between retail and wholesale orders. KPMG Consulting observed translation center personnel accessing both retail and wholesale orders from MARCH according to due date.

Test Reference	Evaluation Criteria	Result	Comments
PPR10-13	The method for prioritizing orders in the translation group system(s) is the same for retail and wholesale.	Satisfied	The RCMAC receives RMAs from MARCH via TRACKER and re-administers the translations back to MARCH when the translation problem is resolved. Neither TRACKER nor MARCH differentiate between retail and wholesale orders. MARCH processes and systematically distributes orders to the switches based upon due date. KPMG Consulting observed translation center personnel accessing both retail and wholesale orders from MARCH according to due date. The MARCH System Administrator's Guide (VZN DOC# BR 190-537-100) is used for both retail and wholesale.
PPR10-14	Outputs from the translations system(s) are prioritized using the same method for retail and wholesale.	Satisfied	After a translation is provisioned, MARCH forwards the order back to SOAC so the order management process can continue. MARCH processes and systematically distributes orders to SOAC as switch translation assignments are completed. Retail and wholesale orders are handled in the same manner. KPMG Consulting observed translation center personnel access and work orders according to due date. Once the necessary work was complete for an order the translation personnel closed the order at which point the order could be considered an output of the translation center.

Test Reference	Evaluation Criteria	Result	Comments
PPR10-15	Inputs to the problem resolution system(s) are prioritized using the same method for retail and wholesale.	Satisfied	SOAC controls the progress of service orders through the provisioning process. SOAC sends loop assignment and office equipment or switch assignment orders to LFACS and/or SWITCH. Orders that fall out as RMAs are sent to PAWS for resolution. Translation orders that fall out of MARCH as RMAs are sent to TRACKER for resolution. Orders enter PAWS and TRACKER in the sequence they fall out of LFACS, SWITCH, or MARCH. LFACS, SWITCH, and MARCH do not differentiate between retail and wholesale. KPMG Consulting observed problem resolution center personnel accessing both retail and wholesale orders from PAWS according to due date.
PPR10-16	The method for prioritizing orders in the problem resolution group system(s) is the same for retail and wholesale.	Satisfied	Problem resolution can take place in APC, FMC, CPC, NAC, and RCMAC. The systems and methods used to assign priority to RMAs in these centers do not differentiate between retail and wholesale. KPMG Consulting observed inventory center personnel interacting with the same systems for both retail and wholesale. Centers prioritize work according to critical dates; the APC, FMC, NAC, and RCMAC prioritize according to due date, while the CPC prioritizes orders according to RID. KPMG Consulting observed problem resolution center personnel access and work both retail and wholesale orders according to due date.

Test Reference	Evaluation Criteria	Result	Comments
PPR10-17	Outputs from the problem resolution system(s) are prioritized using the same method for retail and wholesale.	Satisfied	Once an RMA is resolved, the facility or translation assignment is re-entered into the system it fell out of (LFACS, SWITCH, or MARCH) so that the order can continue to flow through the provisioning process. Orders are re-entered into the automated provisioning process based on the order the RMAs were completed. The systems used for problem resolution distribute work volumes consistently between retail and wholesale and do not track whether an order is retail or wholesale. KPMG Consulting observed problem resolution center personnel access and work orders according to due date. Once the necessary work was complete for an order, the problem resolution personnel closed the order at which point the order could be considered an output of the problem resolution center.
PPR10-18	Inputs to the system(s) within the dispatch center are prioritized using the same method for retail and wholesale.	Satisfied	The CSC, SSC, and NOC have dispatching functions. The CSC and SSC receive work orders from the WFA system. The NOC receives work orders from TIRKS. Inputs to these centers are organized by critical dates for both retail and wholesale. The Verizon NOC/DI Handbook is used for both retail and wholesale. KPMG Consulting observed a CSC representative accessing dispatch orders within the WFA/C and WFA/DO systems consistently between retail and wholesale according to due date.

Test Reference	Evaluation Criteria	Result	Comments
PPR10-19	The method for prioritizing orders in the dispatch center system(s) is the same for retail and wholesale.	Satisfied	The systems used in the CSC for retail are the same as the systems used in the wholesale services CSC. Dispatching functions are systematically prioritized based on due date. There is no difference in how the NOC or SSC process retail and wholesale orders. The following dispatch center documents are used for both retail and wholesale: ◆ SSC T1 Turn Up Procedures ◆ SSC Primary Rate ISDN Installation Procedures for "D" and "B" Channels ◆ Verizon NOC/DI Handbook KPMG Consulting observed dispatch center personnel access and process orders and verified that the systems are prioritized by due date for retail and wholesale.
PPR10-20	Outputs from the dispatch system(s) are prioritized using the same method for retail and wholesale.	Satisfied	Order processing and distribution from and within the dispatch centers is performed by either the WFA/DO or WFA/DI systems. Dispatch centers prioritize orders according to due date. Any outputs from the distribution center are prioritized according to when the dispatch center completed its necessary tasks. The prioritization of outputs is consistent between retail and wholesale. KPMG Consulting observed dispatch center personnel interacting with the WFA/C and WFA/DO systems, work was prioritized by critical date and was not based on whether the order was retail or wholesale. The Verizon NOC/DI Handbook is used for both retail and wholesale.
PPR10-21	Inputs to the system(s) within the Central Office are prioritized using the same method for retail and wholesale.	Satisfied	The CO technician receives work via the WFA/DI system and FOMS. Work is processed according to due date. KPMG Consulting personnel working on the Provisioning Verification and Validation (TVV4) test observed CO technicians accessing orders according to due date.

Test Reference	Evaluation Criteria	Result	Comments
PPR10-22	The method for prioritizing orders in the Central Office system(s) is the same for retail and wholesale.	Satisfied	The CO uses the same systems for retail and wholesale. The systems differentiate based on technology. KPMG Consulting personnel working on the Provisioning Verification and Validation test (TVV4) observed CO technicians access and work orders according to due date.
PPR10-23	Outputs from the system(s) within the Central Office are prioritized using the same method for retail and wholesale.	Satisfied	CO order processing and distribution from and within the WFA/DI system is consistent between retail and wholesale. Outputs from the CO are systematically prioritized according to completion date and time. KPMG Consulting observed CO personnel access and work orders according to due date. Once the necessary work was complete for an order the CO personnel closed the order at which point the order could be considered an output of the CO center.
Parity in Methods and Procedures (M&Ps)			
PPR10-24	M&Ps in the engineering center are the same or are functionally equivalent for retail and wholesale.	Satisfied	Methods and procedures in the FMC are the same for retail and resale circuit provisioning. KPMG Consulting observed that methods and procedures in the engineering centers were identical for retail and wholesale. The methods and procedures were onsite and available to center personnel. The following are examples of documentation used within the engineering center for both retail and resale: ◆ FMC Description of AT Responsibilities ◆ FMC RID Escalations ◆ Verizon South CPC TFAS Problem Codes

Test Reference	Evaluation Criteria	Result	Comments
PPR10-25	M&Ps in the engineering center are the same or are functionally equivalent for retail and resale.	Satisfied	The FMC designs circuits for POTS and Basic Rate ISDN orders. The CPC and IOF group design circuits for Special Services orders. Methods and procedures in the three centers for UNEs are the same for retail and wholesale. KPMG Consulting observed that methods and procedures in the engineering centers were identical for retail and wholesale. The methods and procedures were onsite and available to center personnel. The following are examples of documentation used within the engineering center for both retail and resale: ◆ FMC Description of AT Responsibilities ◆ FMC RID Escalations ◆ Verizon South CPC TFAS Problem Codes
PPR10-26	M&Ps in the inventory center are the same or are functionally equivalent for retail and wholesale.	Satisfied	Methods and procedures in the NAC are the same for retail and wholesale. M&Ps for the NAC can be found on the Verizon corporate intranet site. KPMG Consulting observed that methods and procedures in the inventory centers were identical for retail and wholesale. The methods and procedures were onsite and available to center personnel. The following is an example of documentation used within the inventory center for both retail and resale: ◆ Line and Number M&Ps – Switch/Premise Guidelines

Test Reference	Evaluation Criteria	Result	Comments
PPR10-27	M&Ps in the facilities center are the same or are functionally equivalent for retail and wholesale.	Satisfied	Methods and procedures in the APC, CPC, FMC, and IOF group are the same for retail and wholesale. KPMG Consulting observed that methods and procedures in the facility centers were identical for retail and wholesale. The methods and procedures were onsite and available to center personnel. The following are examples of documentation used within the facilities center for both retail and resale: ◆ Bellcore FACS Service Order Exception Message Performance Aid (Books 1, 2, & 3) ◆ CPC Design Handbook ◆ FMC Qualification Forms for ISDN, ADSL, DS1, and DS3 ◆ SOAC/TIRKS RMA Analysis
PPR10-28	M&Ps in the translations center are the same or are functionally equivalent for retail and wholesale.	Satisfied	Methods and procedures in the RCMAC are the same for retail and wholesale. KPMG Consulting observed that methods and procedures in the translations centers were identical for retail and wholesale. The methods and procedures were onsite and available to center personnel. The following are examples of documentation used within the translations center for both retail and resale: ◆ Bellcore MARCH System User Job Aid for 5ESS Switches, Bellcore Practice ◆ Bellcore MARCH System Administrator's Guide

Test Reference	Evaluation Criteria	Result	Comments
PPR10-29	M&Ps in the problem resolution center are the same or are functionally equivalent for retail and wholesale.	Satisfied	Methods and procedures in the APC, CPC, FMC, NAC, and RCMAC are the same for both retail and wholesale. KPMG Consulting observed that methods and procedures in the problem resolution centers were identical for retail and wholesale. The methods and procedures were onsite and available to center personnel. The following are examples of documentation used within the problem resolution center for both retail and resale: ◆ SOAC/TIRKS RMA Resolution ◆ FMC RMA Codes ◆ SOAC/TIRKS RMA Analysis
PPR10-30	M&Ps in the dispatch center are the same or are functionally equivalent for retail and wholesale.	Satisfied	Methods and procedures in the CSC Wholesale center are consistent, and functionally equivalent to methods and procedures in the CSC Retail center. Methods and procedures in the SSC and NOC are the same for retail and wholesale. KPMG Consulting observed that methods and procedures in the dispatch centers were identical for retail and wholesale. The methods and procedures were onsite and available to center personnel. The following are examples of documentation used within the dispatch centers for both retail and resale: ◆ SSC TI Turn-up Procedures ◆ Verizon NOC/DI Handbook

Test Reference	Evaluation Criteria	Result	Comments
PPR10-31	M&Ps in the network operations center are the same or are functionally equivalent for retail and wholesale.	Satisfied	Methods and procedures in the NOC are the same for retail and wholesale. KPMG Consulting observed that methods and procedures in the network operations center were identical for retail and wholesale. The methods and procedures were onsite and available to center personnel. The Verizon Network Operations Center Information Letter, Unbundled Network Element (UNE) Conversions is an example of documentation used within the network operations center for both retail and resale.
PPR10-32	M&Ps in the central office are the same or are functionally equivalent for retail and wholesale.	Satisfied	Methods and procedures in the CO are the same for retail and wholesale for comparable product offerings. An exception would be loop migration with local number portability, where there is not a retail equivalent. In these cases, Verizon NJ relies upon product specific M&Ps that are comparable in style and level of detail to retail M&Ps. KPMG Consulting observed that methods and procedures in the central offices were identical for retail and wholesale. The methods and procedures were onsite and available to center personnel.
Parity in Execution			
PPR10-33	The execution of work in the engineering center is the same for Verizon NJ retail and wholesale centers.	Satisfied	Work executed by the APC, CPC, and IOF group is prioritized by critical dates. All three centers work both retail and wholesale orders. In each center the same employees work both retail and wholesale orders; the processes for both retail and wholesale are the same. Engineering center personnel are not readily able to distinguish whether work is related to wholesale or retail accounts. KPMG Consulting observed engineering center personnel interacting with the same systems and processing work in the same manner for both retail and wholesale.

Test Reference	Evaluation Criteria	Result	Comments
PPR10-34	The execution of work in the inventory center is the same for Verizon NJ retail and wholesale.	Satisfied	The NAC provides administrative oversight for the entire Verizon NJ network. It does not differentiate between retail and wholesale. RMAs for "switch port cannot be assigned" failures are received and resolved in the same manner for both retail and wholesale. Inventory center personnel are not readily able to distinguish whether an RMA is related to a wholesale or retail account. KPMG Consulting observed inventory center personnel interacting with the same systems and processing work in the same manner for both retail and wholesale.
PPR10-35	The execution of work in the facilities center is the same for Verizon NJ retail and wholesale.	Satisfied	Work executed by the FMC is prioritized by date due. Processes are the same for both retail and wholesale orders. Work executed by the APC is prioritized by date due. Assignment Administrators are in charge of both retail and wholesale orders; the processes for both retail and wholesale are the same. Work executed by the CPC is prioritized by RID and the processes are the same for both retail and wholesale orders. Personnel in the three facilities centers are not readily able to distinguish whether work is related to wholesale or retail accounts. KPMG Consulting observed facility center personnel interacting with the same systems and processing work in the same manner for both retail and wholesale.

Test Reference	Evaluation Criteria	Result	Comments
PPR10-36	The execution of work in the translation center is the same for Verizon NJ retail and wholesale.	Satisfied	Work executed by the RCMAC is performed in the same manner for both retail and wholesale orders based on date due. Translation center personnel are not readily able to distinguish whether work is related to wholesale or retail accounts. KPMG Consulting observed translation center personnel interacting with the same systems and processing work in the same manner for both retail and wholesale.
PPR10-37	The execution of work in the problem resolution center is the same for Verizon NJ retail and wholesale.	Satisfied	Work executed by the APC is prioritized by date due. ELAs are responsible for both retail and wholesale orders. Processes for both retail and wholesale orders are the same. Work executed by the CPC is prioritized by RID and the processes are the same for both retail and wholesale orders. Work executed by the FMC is prioritized by date due. ELAs work and process orders the same for both retail and wholesale orders. The execution of orders by the RCMAC is the same for both retail and wholesale and is based on the date due of orders. Work executed by the NAC is the same for both retail and wholesale. Personnel in these resolution centers are not readily able to distinguish whether work is related to wholesale or retail accounts. KPMG Consulting observed problem resolution center personnel interacting with the same systems and processing work in the same manner for both retail and wholesale.

Test Reference	Evaluation Criteria	Result	Comments
PPR10-38	The execution of work in the dispatch center is the same for Verizon NJ retail and wholesale.	Satisfied	CSC order assignment is based upon appointment and due date for both the retail and wholesale centers. The execution of orders in the SSC and NOC is consistent and comparable between retail and wholesale. Dispatch center personnel are not readily able to distinguish whether work is related to wholesale or retail accounts. KPMG Consulting observed dispatch center personnel interacting with the same systems and processing work in the same manner for both retail and wholesale.
PPR10-39	The execution of work in the central office is the same for retail and wholesale.	Satisfied	The assignment of work in the CO is by due date and time, and is not based on wholesale or retail. COTs execute work volumes based upon frame due date and frame due time. COTs receive work via WFA/DI and SWITCH/FOMS systems. For all retail and wholesale equivalent orders, work is processed in the same manner and the technicians are not readily able to distinguish whether work is related to wholesale or retail accounts. Loop migrations (hot cuts) are specific to wholesale accounts and have no retail equivalent. Loop migrations were address in the Provisioning Verification and Validation (TVV4) test.

C. Test Results: Provisioning Coordination Process Evaluation (PPR11)

1.0 Description

The Provisioning Coordination Process Evaluation (PPR11) was a review of Verizon New Jersey's (Verizon NJ) procedures, processes, and operational environment used to support coordinated provisioning with Competitive Local Exchange Carriers (CLECs). The evaluation addressed products and situations that require coordinated provisioning, which is intended to minimize customer disruption. The objectives of this evaluation were:

- Determine the completeness and consistency of provisioning coordination processes;
- Determine whether the provisioning coordination processes are correctly documented, maintained, and published;
- Determine the accuracy, completeness, and functionality of procedures for measuring, tracking, projecting, and maintaining provisioning coordination process performance;
- Ensure the provisioning coordination processes have effective management oversight; and
- Ensure that the responsibilities for provisioning coordination process performance improvement are defined and assigned.

2.0 Methodology

This section summarizes the test methodology.

2.1 Business Process Description

The process flow for CLEC orders that require coordination is depicted in the following chart:

Figure 11-1: Verizon NJ Provisioning Process Overview

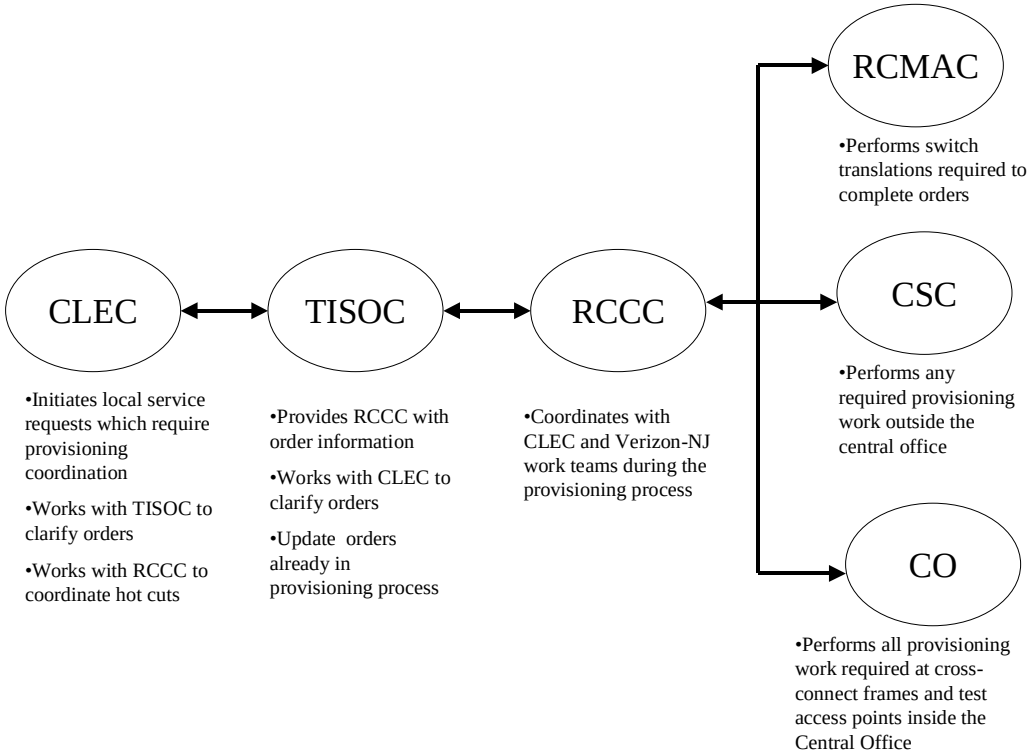

The Regional CLEC Coordination Center (RCCC) is divided into two functional centers. The first center, also referred to as the RCCC, handles provisioning coordination. This center's responsibilities includes hot cuts, hot cuts with IDLC, Local Number Portability (LNP), screening, training, flow-through orders, and new analog loops. The focus of this center is to establish partnerships with CLECs and to provide service in a manner to maintain parity with Verizon NJ retail. The RCCC does not have a role in provisioning Plain Old Telephone Service (POTS) or Special Services for resale. The second center, the CLEC Loop Provisioning Center (CLPC), is responsible for handling line sharing orders and loop qualifications for the entire Verizon footprint.

The provisioning process begins when the RCCC receives Local Service Requests (LSRs) through Verizon NJ's provisioning systems. A coordinator in the RCCC verifies the order and places an initial call to the CLEC to confirm order information such as the due date, type of service order, and number of lines involved. Telephone calls are placed to the CLEC before provisioning when it is necessary to coordinate the exact timing of service installation. For wholesale products that require coordinated provisioning, the RCCC directs the workflow of relevant Verizon NJ organizations. These organizations include technician teams in the central office or field and switch translation personnel in the Recent Change Memory Administration Center (RCMAC). Once the circuit is provisioned, the RCCC places another telephone call to the CLEC to confirm service installation completion.

The RCCC has seven major functional groups:

- Screeners – This group screens and distributes POTS orders to Maintenance Administrator (MA) Coordinators on the Unbundled Network Element (UNE) MA teams. Direct Inward Dialing (DID) circuits, trunks and Special Services orders are screened and distributed to Central Office Technicians (COT) on the UNE COT teams.
- Plant Assignment - Plant Assignment, formerly performed by the RCCC, is now performed by the Assignment Provisioning Center (APC). Plant Assignment Clerks (PACs) within the APC assign loops and office equipment for UNE POTS and Special Services orders that fall out of Verizon NJ's provisioning assignment systems as Requests for Manual Assistance (RMA). An RMA is generated for an order when conditions for flow-through are not met. The team also performs digital loop qualifications for the region.
- UNE Maintenance Administrators (MA) – MAs coordinate hot cuts, provision new POTS lines, and process LNP orders.
- UNE Engineering Assistants (EA) – EA teams design circuits for Special Services.
- UNE Specials Provisioning – After UNE special circuits are designed, COTs work on circuit tests and turn-ups.
- Complex Services – The Complex Services team performs complex cut-overs for DID circuits and trunks.
- Process Management – Assigned RCCC staff work on enhancing processes related to computer systems and workflow.

The RCCC interacts with the Telecom Industry Services Ordering Center (TISOC), the Facilities Management Center (FMC), Inter-Office Facilities (IOF), the Recent Change Memory Administration Center (RCMAC), the Network Operation Center (NOC), the Customer Service Center (CSC), COTs, outside plant technicians, and CLECs.

2.1.1 Workflow Process for Non-Designed Services Requiring Coordination

After CLEC orders for unbundled POTS lines are entered into the Service Order Processor/Direct Order Entry System (SOP/DOE), the orders flow downstream for assignment, see Figure 10-1 in the Provisioning Process Evaluation (PPR10).

The provisioning of non-designed services is as follows:

Screeners – Screeners prioritize orders by due date. The Screeners decide which orders go to UNE MAs or Complex Services COTs based on skill level and load balancing considerations. Loop and switch port assignments for UNE POTS and Special Service orders are performed by the APC before the RCCC working the order. The Screener team leader performs a weekly quality audit by sampling and reviewing each Screener's work.

UNE Maintenance Administrators (MAs) – MAs receive hot cut and LNP orders in Work Force Administration Control (WFA/C) from the Screener MAs. The MA reviews the order for accuracy and then begins the process for executing an LNP or hot cut order. MAs log activities into the WFA Operational Support Systems Log (OSSLOG). Activities performed by the MA for hot cuts include CTR1, CTR2, and Due Date (DD) as described below:

- CTR1 events, normally performed four days before the Due Date (DD-4), involve connection and disconnection verification, cable pair verification, determination of whether an integrated Subscriber Loop Carrier (SLC) conversion is involved, coordination with internal centers, and information exchange with the CLEC.
- CTR2 events, performed the day before the Due Date (DD-1), involve identification of order corrections or modifications, verification of pre-wiring completion, and confirmation of correct order status.
- Due Date (DD) events involve final verification of correct order status, final CLEC confirmation for the cutover, CLEC dial tone verification, CLEC notification of completion, and order completion in internal systems.

MA team leaders perform monthly audits on a sample of each MA's work including determining whether CTR1 and CTR2 coordinating events were performed when processing orders and verifying whether all coordinating activities were documented in the OSSLOG of WFA/C. The assessment made through these audits forms the basis of part of the MA's qualitative performance evaluation. The MA's quantitative performance is evaluated by assessing how many orders the MA processed during the month as compared to the average number of orders processed by all MAs.

2.1.2 Workflow Process for Designed Services Requiring Coordination

After CLEC orders for Special Services are entered into SOP/DOE, the orders flow downstream for assignment, circuit design, and translations, see Figure 10-2 in the Provisioning Process Evaluation (PPR10).

The provisioning of designed services is as follows:

Plant Assignment – The Plant Assignment team assigns loops and switch ports for Special Services orders that fall out of Verizon NJ's provisioning assignment systems as RMAs. RMAs are worked in the order they are received at the RCCC. The goal is to complete all work necessary to clear the RMA within 24 hours of receipt. The Plant Assignment team also performs loop qualifications for Integrated Services Digital Network (ISDN) Basic and Digital Subscriber Loop (xDSL) services by executing Mechanized Loop Tests (MLT) and verifying whether the circuit is copper or Digital Loop Carrier (DLC). PAC's goal is to respond to a loop qualification request from the TISOC within one hour. The PAC team leader performs a weekly quality audit by receiving a sample of each PAC's assignment work.

UNE Engineering Assistant (EAs) – EAs, within the Circuit Provisioning Center (CPC), design DS-0 and high capacity (DS-1 and DS-3) circuits in the Trunk Integrated Record Keeping System (TIRKS). UNE orders are prioritized by Record Issue Date (RID). The RID is one of the critical dates in the provisioning cycle for Special Services or Access Services orders. The objective in the provisioning process is to create and distribute circuit designs to the UNE Provisioning team, the central offices, and the Customer Service Center (CSC) through TIRKS on or before the RID. The RCCC has an annual goal of issuing designs by the RID for 95% of orders processed. The design process for a DS0 circuit consists of assembling all of the required circuit components for the circuit from the "A" location to the "Z" location, for point-to-point circuits.

Designs for DS0 orders are processed by TIRKS in an automated manner except that the Connecting Facility Assignment (CFA) from the main distribution frame to the co-location cage is added to the design by the EA. However, when circuit design elements other than the CFA are not performed automatically by TIRKS because of an error or problem with components of the design, the order falls out to the Facility Pending Date (FPD) or Facility Exception (FE) list in the TIRKS Program Control Feature (PCF).

Analysts on the DS0 Design team objective is to issue designs on or before an order's RID. Analyst productivity is rated by comparing the number of designs issued per month to the average for all DS0 design analysts.

High-Capacity orders for DS1s and DS3s come to the RCCC for design via the Pending Completion (PC) List of TIRKS. The design process for a DS1 circuit consists of assembling all required circuit components from the "A" location to the "Z" location, for point-to-point circuits.

The DS1 circuit components are assembled from inventories in TIRKS. The Facilities Management Center (FMC) performs loop assignments for DS1 circuits. The Loop Facility Record (LFR) is received by fax from the FMC by the RID. The most economical IOF route for the design is provided in an automated manner by TIRKS or the IOF Group on or before the RID. If not received by the RID, the analyst notifies the IOF Group on the RID and the IOF Group has four hours to respond back to the RCCC with IOF circuit details. In addition, if any of the loop components are fiber, the IOF Group provides the fiber loop circuit design details to the RCCC. Escalations with the FMC or the IOF Group occur if loop assignment and the IOF are not provided on time. The Primary Digital Access Cross-Connect (PDAC) route or SONET ring channels for a high capacity circuit and the terminating equipment in each central office from the "A" to "Z" location may already exist as available inventory in TIRKS. If the inventory is available, TIRKS designs the circuit in an automated manner and the Circuit Provisioning Center (CPC), Carrier Account Team Center (CATC), or the RCCC verifies the accuracy of the design, potentially without any involvement from the IOF Group. If the PDAC does not exist or has no spare capacity, the high capacity circuit order falls out to the IOF Group as an RMA.

The design process for DS3 circuits is identical to the design process for DS1 circuits.

UNE Specials Provisioning – After UNE Special Circuits have been designed, circuit test and turn-up is performed by COTs. COTs perform activities to comply with critical dates, including: Work Start Date (WSD); Design, Verified, and Assigned Date (DVA); Wired and Office Tested Date (WOT); Frame Continuity Date (FCD); Plant Test Date (PTD); and Due Date (DD).

The CLEC is advised of any jeopardy conditions that prevent service delivery on the due date.

Complex Services – COTs on this team perform complex cutovers for DID circuits and Trunks. COTs perform work in the WFA/C. Screener MAs monitor WFA/C and schedule COTs workload via the WFA OSSLST. To perform cutovers for DID circuits and trunks, the COTs perform the same CTR1 and CTR2 steps that UNE MAs perform for hot cuts.

2.2 Scenarios

For CLEC scenarios see Provisioning Verification and Validation (TVV4).

2.3 Test Targets & Measures

The test target was Verizon NJ's Provisioning Coordination process, which included reviews of the following sub-processes:

- Provisioning orders requiring coordination with CLECs
- Request coordination
- Notification of provisioning schedule
- Coordinate provisioning
- Jeopardy notification

2.4 Data Sources

The data collection performed for this test centered on interviews, direct center observations, and reviews of documentation supplied by Verizon NJ at the request of the Test Manager. The sources of data for this test include Methods and Procedure (M&P) documents from the Regional CLEC Coordination Center (RCCC) and the Telecom Industry Services Operations Center (TISOC).

2.4.1 Data Generation/Volumes

This test did not rely on data generation or volume testing.

2.5 Evaluation Methods

The procedural steps applied in testing the provisioning coordination process consisted of the following:

1. Interviews of personnel in the TISOC, including the director, center manager, quality assurance manager, metrics manager, and service representatives to review:

- Order Processing for LNP and non-LNP UNE-loops; and
- Order processing for unbundled Special Services circuits.

2. Interviews were conducted with personnel in the RCCC and the CO, including the director, center manager, process manager, team leaders, UNE engineering assistants, screener maintenance administrators, maintenance administrators, and technicians to review:

- Work assignment and provisioning coordination procedures with the CLECs, the RCMAC, and central office frame for UNE-loop with and without LNP provisioning, and LNP provisioning;

- Work assignment and provisioning coordination procedures with the CLECs, the COTs, and the outside plant system technicians for provisioning unbundled Special Services circuits;
- The center's policy and process to measure, track, and maintain the coordination procedure and improvements; and
- The director's and the center manager's oversight regarding performance management and process improvements.

3. Interviews with central office first-level managers and technicians to review work assignment and the RCCC coordination procedures with the central office frame for performing lay-ins (cross-connects) and UNE-loop with LNP hot cut migrations (line cutovers).

4. Interviews with the director, quality assurance manager, team leaders, and translation administrators in the RCMAC to review the work assignment process and the RCCC coordination procedures with the RCMAC for performing switch translations.

5. Interviews with personnel in the APC, FMC, NOC, CSC, and IOF including the director, first-level managers, team leaders, and associates.

6. A review of the provisioning coordination M&P documentation for the applicable products.

7. Observations of central office technicians performing cutovers at the frame for two wire analog UNE-loops with LNP migrations (hot cuts) to assess:

- The actual performance and effectiveness of the provisioning coordination process; and
- The extent to which the M&Ps are followed and practiced in the field.

2.6 Analysis Methods

The Provisioning Coordination Process Evaluation (PPR11) included a checklist of evaluation criteria developed by the Test Manager during the initial phase of the Verizon NJ OSS Evaluation. These evaluation criteria provided the framework of norms, standards, and guidelines for the Provisioning Coordination Process Evaluation (PPR11).

The data collected were analyzed employing the evaluation criteria described in Section 3.1 below.

3.0 Results

This section identifies the evaluation criteria and test results.

3.1 Results Summary

The results of this test are presented in the table below.

Table 11-1: PPR11 Evaluation Criteria and Results

Test Reference	Evaluation Criteria	Result	Comments
PPR11-1	Coordinated provisioning procedures are practiced in the field accurately and consistently.	Satisfied	A complete description of the procedures is provided in the CLEC Handbook. The CLEC Handbook can be located on the internet. Volume III addresses all provisioning procedures. It can be accessed by going to http://www.bellatlantic.com/wholesale/html/handbooks/clec/c3toc.htm. All of the elements of coordination, including exception handling and escalations, are defined between the CLECs and the Verizon NJ work teams. Coordination procedures are consistently performed. The RCCC directs the relevant Verizon NJ provisioning organizations through the process, including the technician team in the central office or field, and switch translation personnel in the RCMAC. Following provisioning, the RCCC places another telephone call to the CLEC to confirm completion of ordered service installation. KPMG Consulting observed that RCCC personnel accurately and consistently implemented the hot cut process. Additionally, hot cuts were observed with two additional KPMG Consulting personnel in the Central Office. The processes were followed as outlined in the methods and procedures for transactional analysis. For supporting details see the final report section for Provisioning Verification and Validation (TVV4).

Test Reference	Evaluation Criteria	Result	Comments
PPR11-2	Coordinated provisioning performance measures and process improvement practices are defined, tracked, and controlled.	Satisfied	Process performance measures are defined, and performance is measured, tracked, and controlled. The RCCC is due date driven with an annual objective of meeting the due date for 97% of all POTS orders and 92% of all Special Services orders. Other RCCC performance objectives are to limit premature disconnects to less than 1% of monthly orders and to limit trouble reports within 30 days on services turned up to less than 5% of turned up orders per month. Each of the seven groups within the RCCC measures, tracks, and controls its performance on a weekly, monthly, and annual basis. Process improvement practices are documented and readily available. The RCCC has a documented process to manage coordination procedures. Quality of service and performance in meeting goals set for executing provisioning coordination processes are measured and tracked. Ongoing control of the coordinated provisioning is managed through a quality review of a sample of work performed by each center's staff members.
PPR11-3	Coordination Center manual coordination procedures with the CLECs are defined and consistent.	Satisfied	The procedures for the notification of the completion of provisioning are complete and consistent. The documented procedures state that: the RCCC notifies the CLEC Implementation Contact (IMPCON) immediately after the COT or the Outside Service Technician completes the order. The RCCC coordination procedures are defined in the following documents: ◆ Conversions Coordination for Non-Design UNE. ◆ Two-Wire Analog Loop including LNP/IDLC (VZN DOC# RCO-99-1014). ◆ Customer Specified Signaling & EEL Analog M-Loop Hot Cuts (VZN DOC# RCO-00-2013) ◆ RCCC and CLEC Interface Guide (RCO-99-0028)

Test Reference	Evaluation Criteria	Result	Comments
PPR11-4	CLEC manual coordination procedures with the translations group, central office frame, and dispatch out work team are defined and consistent.	Satisfied	The manual coordination procedures in place among the RCMAC, central office frame, and dispatch out work team are defined and consistent with the RCCC coordination procedures, which are defined in the following documents: ◆ Conversions Coordination for Non-Design UNE. ◆ Two-Wire Analog Loop including LNP/IDLC (VZN DOC# RCO-99-1014). ◆ Customer Specified Signaling & EEL Analog M-Loop Hot Cuts (VZN DOC# RCO-00-2013)
PPR11-5	Process errors and exceptions are tracked using a defined process.	Satisfied	Manual procedures exist for exceptions handling such as order postponement, cancellation, switchback, and missed order. KPMG Consulting observed that these documents are readily available to the RCCC and Central Office personnel.
PPR11-6	Orders are tracked using a defined escalation process.	Satisfied	Order escalation procedures are defined. The procedures begin with the RCCC Coordinator and can escalate up to the Executive level. The escalation procedures and call numbers at each level are documented in the CLEC Handbook. The procedures for escalation are also available to the CLECs on the Verizon website. The website address is: ◆ http://128.11.40.241/east/wholesale/resources/master.htm. Additional information on escalation procedures can be found in the: ◆ RCCC and CLEC Interface Guide (RCO-99-0028) ◆ KPMG Consulting observed that these documents are readily available to the RCCC personnel.

Test Reference	Evaluation Criteria	Result	Comments
PPR11-7	Processes within the CLEC coordination center and central offices are defined and tracked.	Satisfied	Documents were available in both the RCCC and Central Offices. Technicians were familiar with the documents. A complete description of the procedures is provided in the CLEC Handbook. All of the elements of coordination are defined between the CLECs and Verizon NJ work teams. The website address for the CLEC Handbook is: http://www.bellatlantic.com/wholesale/html/handbooks/clec/c_home.htm

This page is intentionally blank.

D. Test Results: Provisioning Verification and Validation (TVV4)

1.0 Description

The Provisioning Verification and Validation (TVV4) test evaluated the capability of Verizon New Jersey (Verizon NJ) to provision Competitive Local Exchange Carrier (CLEC) orders on the committed due date and in accordance with Verizon NJ's documented methods and procedures.

Provisioning tests were performed on orders submitted through the Electronic Data Interface (EDI) and the Verizon Web Graphical User Interface (GUI) for Resale, UNE-Platform (UNE-P), and UNE-Loop (UNE-L) delivery methods. The test examined the effects of provisioning service elements, including switch translations (STs), directory listings (DLs), coordinated UNE-loop migrations, local number portability (LNP) activation, DS0, DS1 and xDSL loops (Digital Subscriber Loop), ADSL Line Sharing loops and High Capacity Circuit installations. Sample orders were selected from the test bed and analyzed for the types of provisioning elements required. Test methods included field inspections of physical provisioning installations, verification by analyzing Verizon NJ information system reports, and examining external resources such as the Number Portability Administration Center (NPAC) system.

2.0 Methodology

This section summarizes the test methodology.

2.1 Business Process Description

Verizon NJ performs provisioning activities to establish services requested by customers. CLECs issue Local Service Requests (LSRs) to Verizon NJ to migrate, install, change, or disconnect services. After receiving the LSR, Verizon NJ generates a Local Service Request Local Response (LSRLR) notification to the CLEC. The LSRLR confirms the committed due date and time, as well as other information from the CLEC's LSR. Verizon NJ notifies the CLECs that the LSR was provisioned using a Provisioning Completion Message (PCM). Following the PCM, Verizon NJ sends a Billing Completion Message (BCM).

Elements of the provisioning process include:

- Directory Listing (DL) – During this process, a DL is modified based on information contained in the LSR. Verizon NJ provisions changes to the DL and directory assistance database on the due date. An exception to this process involves Local Number Portability (LNP) service requests. A LNP request requires the CLEC to submit a DL service request to retain or make changes to the DL. Verizon NJ is expected to perform the LNP DL provisioning at Frame Due Date + 1 day or less.
- Switch Translations – During this process, the CLEC's LSR is analyzed for feature changes. All feature changes are provisioned in the Verizon NJ switch on the due date and availability is expected at the time of provisioning completion.
- Loop Migrations (Hot Cuts) – During this process, existing Verizon NJ lines are migrated to the CLEC collocation facility inside a Verizon NJ central office. Verizon NJ frame technicians migrate the lines at the main distribution frame (MDF) on the committed due date. The hot cut is expected to start at the Frame Due Time (FDT) as indicated on the LSR. Cases involving Integrated Digital Loop Carrier (IDLC) migrations require outside technicians to perform field work on the due date and time of day (a.m./p.m.)

- Local Number Portability (LNP) – During this process, Verizon NJ coordinates actions with the CLEC acquiring the account and the NPAC (agency that maintains LNP databases), thereby allowing customers to retain their existing telephone number when they migrate to a CLEC.
- High Capacity Circuits – During this process, Verizon NJ provisions high-capacity facilities requested by CLECs. CLECs request these types of circuits in order to establish a backbone for unbundled loops with Enhanced Extended Loop (EEL) arrangements.
- Unbundled Network Elements (UNE) Loops – During this process, physical connectivity is established from a subscriber location to a local serving office (Verizon NJ Central Office) where the CLEC maintains a collocation arrangement. UNE-loops are available in several varieties including DS0, DS1, ISDN, xDSL, ADSL Line Sharing and EEL M-loops.

2.2 Scenarios

Provisioning testing and analysis were based on a representative set of Resale, UNE-P, UNE-loop and High Capacity Circuit scenarios. For many of the provisioning scenarios, CLECs conducting business in New Jersey took an active part in the testing process by allowing KPMG Consulting to observe commercial installations. The scenarios tested during the Provisioning Verification and Validation (TVV4) test included:

- Installation of new services for Resale, UNE-P and UNE-loop (including xDSL and ADSL Line Sharing) delivery methods:
  - With DL changes
  - Without DL changes
- Migration of Verizon NJ services to UNE-loops, specifically:
  - DS0 without number porting
  - DS0 with number porting
- Resale and UNE-P service requests that required switch translations, specifically:
  - POTS
  - ISDN/BRI
  - ISDN PRI
  - Centrex (including Direct Inward Dialing (DID) and Digital Handoff or Flexpath)
- Installation of High Capacity Circuits, specifically:
  - DS1
  - DS3
  - EEL

2.3 Test Targets & Measures

The test targets were Verizon NJ's provisioning of Resale, UNE-P and UNE-loop services and included reviews of the following processes:

- Directory Listing Provisioning Verification
- xDSL Provisioning Verification
- ADSL Line Sharing Provisioning Verification
- Hi-Capacity Circuit Provisioning Validation
- Loss of Line Report Verification
- Disconnected Orders Verification
- Hot Cut Provisioning Verification
- Provisioning Completion Messages Verification
- Customer Service Records Verification
- Switch Feature Provisioning Verification

2.4 Data Sources

The data collected for the test included the following:

- Verizon-South Order Business Rules, Version 4.3.1
- 2-Wire Unbundled Digital ADSL Loop and 2 or 4-Wire HDSL Loop- Designed (South) , New Line Installation (South), Doc #RCO-99-1003
- I/M Field Support, 2/4-Wire HDSL Qualified Digital Loop, Doc # 2000-00125-MDP
- Flash- Wholesale and Resale I&M Support – Wholesale I&M Cooperative Continuity Testing, Doc #1999-00538-MDP
- UNE Digital Loop Technical Specifications, Doc # TR72575
- RCCC Coordinators Guide DS1, Doc #RCO-98-0026
- Loop Qualification Process for Unbundled Digital Loops, Doc #RCO-99-1063
- Unbundled DS3 Loop, Doc #RCO-99-10101
- NOCIL UNE, Doc #9807-18
- 2-Wire Analog Loop Provisioning, Including LNP and IDLC, Doc #RCO-99-0014
- OSS Implementation and Standardization for Conversion Coordination for Non-Design UNE, Doc #1999-002MP-OSS
- Job Aid for UNE Coordinated Conversion Process, Doc # NOCIL 9907-012A, issue #4
- Line Sharing Provisioning & Maintenance Procedure, Doc # 2000-00322-MDP
- Line Sharing – Network Creation, Provisioning and Maintenance Central Office, Doc # NOCIL 0006-021 Issue #02
- Line Sharing – TISOC, Bulletin: 2000-06-001-B

2.4.1 Data Generation/Volumes

This test relied on data generated as part of the POP Functional Evaluation (TVV1) transaction test and “live” commercial CLEC orders.

2.5 Evaluation Methods

The primary focus of TVV4 was to evaluate the following:

- Accuracy – The extent to which Verizon NJ provisioned services as specified on the LSRs.
- Timeliness – The degree to which the orders were provisioned on the committed due dates and times.
- Timeliness and Accuracy of notifications – The accuracy of information and timeliness of the notifications that Verizon NJ sent to the CLECs relative to the Local Service Request Local Response (LSRLR) and Provisioning Completion Messages (PCM).
- Communication and Coordination – The ability of Verizon NJ to coordinate work activities and communicate with the CLECs when physical work required coordination.
- Compliance with Methods and Procedures (M&P) – Verizon NJ's compliance with its internal methods and procedures to the extent that they affected the provisioning outcomes.

Evaluation methods for provisioning tests involved reviewing KPMG Consulting transactions submitted as part of the POP Functional Evaluation (TVV1) test. KPMG Consulting testers completed the following activities as part of this review:

- Switch Translation Verification – A sample of Resale and UNE-P orders was generated from the population of LSRs. Features on the requests were compared to the Switch Translation screen printouts submitted by Verizon NJ. Discrepancies were analyzed and noted.
- Directory Listing (DL) Verification – A sample of Resale and UNE-P was derived from the population of telephone numbers with DL requests. The requests were compared to (i) Verizon NJ Directory Listings Verification Reports and (ii) directory assistance database screen prints. Discrepancies were analyzed and reported for each telephone number.
- DS0 Loop Migrations (Hot Cuts) – Data were gathered during field inspections of hot cut activities in Verizon NJ central offices. Information about telephone contacts from the Regional CLEC Coordination Center (RCCC) were logged and analyzed for compliance with Verizon NJ standard M&Ps.
- High Capacity Circuits – Information was gathered during installation inspection in Verizon NJ central offices and premise locations.
- Local Number Portability (LNP) – Information about LNP provisioning was gathered from information stored in the NPAC System and from logs of telephone calls made from Verizon NJ switches. LNP information was gathered during observations of CLEC commercial installations.
- Provisioning Completion Messages (PCMs) – Required field inputs contained in PCMs and timeliness of PCMs were analyzed.
- Customer Service Records – Information contained within CSRs was evaluated for accuracy against field inputs from submitted LSRs.
- Loss of Line Report – Information contained within the Loss of Line reports was evaluated for accuracy against field inputs from submitted LSRs.
- Disconnect Orders – A sample of Resale and UNE-P orders was generated from the population of LSRs. Disconnect features on the requests were manually tested and the results noted.

2.6 Analysis Methods

The Provisioning Verification and Validation (TVV4) test included a checklist of evaluation criteria developed by the Test Manager during the initial phase of the Verizon NJ OSS Evaluation. These evaluation criteria provided the framework of norms, standards, and guidelines for the Provisioning Verification and Validation (TVV4).

The data collected were analyzed employing the evaluation methods referenced above.

3.0 Results

This section identifies the evaluation criteria and test results.

3.1 Results Summary

The results of this test are presented in Table 4-1 below.

Table 4-1: TVV4 Evaluation Criteria and Results

Test Reference	Evaluation Criteria	Result	Comments
TVV4-1	Verizon NJ's directory listings database contains required field inputs.	Satisfied	162 Directory Listings were reviewed to determine if Verizon NJ provisioned the listings correctly. 152 listings (94%) were provisioned correctly. The difference between the test result of 94% and the KPMG Consulting benchmark of 95% is not statistically significant. According to the test design, any p-value below .0500 leads to a conclusion of a statistically significant deviation from the standard. The p-value for this test was .2929.
TVV4-2	Verizon NJ's Post-Order Customer Service Records (CSRs) contain required field inputs from LSRs.	Satisfied	79 Post Order Customer Service Records (CSRs) were analyzed to determine if Verizon NJ provisioned the CSRs correctly. KPMG Consulting applied a benchmark of 95% for provisioning accuracy. 78 CSRs (99%) were provisioned correctly.
TVV4-3	Verizon NJ provisions CLEC ADSL loops on the committed due date.	Satisfied	KPMG Consulting observed 58 live CLEC ADSL installations to verify that the installations were completed on the agreed-upon due date. KPMG Consulting testers analyzed each observation to compare the installation results to the Carrier-to-Carrier Performance Standard metric PR-4-16 Missed Appointment.[18] Verizon NJ provisioned 95% of the 58 circuits where facilities were available,

[18] PR4-16 Missed Appointment - % Missed Appointment – missed appointment – Verizon NJ –Dispatch. The % of dispatched orders completed after the commitment date due to Verizon NJ reasons.

Test Reference	Evaluation Criteria	Result	Comments
			on the agreed-upon due date. KPMG Consulting testers observed that 3% of the submitted orders were unable to be provisioned because there were no qualified facilities available to the customer's premises.
TVV4-4	Verizon NJ provisions ADSL circuits by completing documented Method and Procedure tasks.	Satisfied	KPMG Consulting measured Verizon NJ's ability to adhere to tasks defined in their M&P documentation.[19] KPMG Consulting evaluated each ADSL installation to validate that Verizon NJ technicians followed the proper chronology for the defined tasks. It is not necessarily the case that non-adherence to methods and procedures results in adverse impact to the CLECs. For example, tasks that were executed out of sequence presented no adverse impact to the ADSL installation. Verizon NJ's M&Ps identify certain tasks that technicians must complete during ADSL installations. Depending on the type of the NID, a step might need to be added to check for the presence of a half ringer. The half ringer introduces added capacitance on the line, which must be removed before ADSL service can be provisioned. During the 58 installations, KPMG Consulting observed 411 tasks. KPMG Consulting applied an internal benchmark of 85% for provisioning accuracy. 406 tasks (99%) were executed in accordance with Verizon NJ's methods and procedures. The 1% non-adherence finding did not have an adverse impact to the CLECs.
TVV4-5	Verizon NJ reports CLEC Loss of Line activity accurately.	Satisfied	KPMG Consulting reviewed production service orders for New Jersey for a one-week period in February 2001. A total of 743 working telephone numbers met the criteria for the CLECs' Line Loss Report provided by Verizon.

[19] The following Method and Procedure documents were reviewed by KPMG Consulting: UNE Digital Loop Technical Specifications, document # TR72575, RCCC Coordinator's Guide DS1 Unbundled Loop Service RCCC-South, document # RCO-99-1063, ADSL/HDSL – 2 Wire Unbundled Digital ADSL Loop and 2 or 4 Wire HDSL Loop- Designed –South – New Line Installation (South), document # RCO-99-1003, Wholesale I&M Cooperative Continuity Testing, document # 1999-00538-MDP.

Test Reference	Evaluation Criteria	Result	Comments
			The criteria encompass the following scenarios: a. Disconnect a Resale account b. Disconnect a UNE-Platform account c. CLEC Migration from a Resale CLEC to another Resale CLEC d. CLEC Migration from a UNE-Platform CLEC to another UNE-Platform CLEC e. CLEC Migration from a Resale CLEC to another UNE-Platform CLEC f. CLEC Migration from a UNE-Platform CLEC to another Resale CLEC g. Conversion from a Resale CLEC to a Facilities-based CLEC (UNE-L Conversion) h. Conversion from a UNE-Platform CLEC to a Facilities-based CLEC (UNE-L Conversion) i. Verizon Winback KPMG Consulting measured the accuracy of the line loss report KPMG Consulting applied a benchmark of 95% for loss of line accuracy. Verizon posted 98.5% of the available lines accurately to the loss of line report.
TVV4-6	Verizon NJ's switch translations for disconnected orders were deprovisioned with the proper intercept-recording message.	Satisfied	KPMG Consulting reviewed 45 orders. These orders were submitted via EDI or GUI to request disconnection of working telephone lines with an intercept recording or a blank number intercept recording (transfer of call option). KPMG Consulting measured provisioning accuracy and timeliness. 42 of the orders (93%) were provisioned in conformance with the due date The difference between the test result of 93% and the KPMG Consulting benchmark of 95% is not statistically significant. According to the test design, any p-value below .0500 leads to a conclusion of a statistically significant deviation from the standard. The p-value for this test was .3923.

Test Reference	Evaluation Criteria	Result	Comments
TVV4-7	Verizon NJ provisions EEL/DS1/DS3 circuits on the committed due date.	Satisfied	KPMG Consulting observed 33 Loop installations (14 DS1s, one DS3, 18 DS1/EELs) to verify that the installations were completed on the agreed-upon due date. KPMG Consulting applied a benchmark of 85% for provisioning timeliness. Verizon NJ provisioned all 33 orders (100%) on the agreed-upon due date and time.
TVV4-8	Verizon NJ provisions EEL/DS1/DS3 circuits by completing documented Method and Procedure tasks.	Satisfied	KPMG Consulting measured Verizon NJ's ability to adhere to tasks defined in their M&P documentation.[20] KPMG Consulting evaluated installation of each circuit to validate that Verizon NJ technicians followed the proper chronology for the defined tasks. Tasks that were executed out of sequence presented no adverse impact to the Loop installations Verizon NJ's M&Ps identify certain tasks that technicians must complete during the installations. During the 33 installations, KPMG Consulting observed 152 tasks. KPMG Consulting applied a benchmark of 85% for provisioning accuracy. 134 of these tasks (88%) were executed in accordance to Verizon NJ's M&Ps. The 12% non-adherence finding did not have an adverse impact to the CLECs.
TVV4-9	Verizon NJ provisions loop migrations within the Cut-Over window	Satisfied	KPMG Consulting observed 80 loop migration (hot cut) orders with a total of 208 lines. Of the 80 orders, 95% were provisioned within the allotted timeframe. These orders consisted of live CLEC installations and KPMG Consulting initiated installations, migrating from one Verizon NJ switch to another Verizon NJ switch. For the two installation types, KPMG Consulting measured Verizon NJ's ability to complete the migration within the cutover window as defined in the NJ

[20] The following Method and Procedure documents were reviewed by KPMG Consulting: UNE Digital Loop Technical Specifications, document # TR72575, RCCC Coordinator's Guide DS1 Unbundled Loop Service RCCC-South, document # RCO-99-1063, Unbundled DS3 Loop, document # RCO-99-10101, I & M Field Support 2/4 Wire HDSL Qualified Digital Loop, document # 2000-00125-MDP, Wholesale I&M Cooperative Continuity Testing, document # 1999-00538-MDP.

Test Reference	Evaluation Criteria	Result	Comments
			Carrier-to-Carrier Guidelines PR-9-01 performance standards and reports.[21]
TVV4-10	Verizon NJ provisions hot cuts by completing documented Method and Procedure tasks.	Satisfied	KPMG Consulting measured Verizon NJ's ability to adhere to tasks defined in their M&P documentation.[22] KPMG Consulting evaluated each hot-cut to validate that Verizon NJ technicians followed the proper chronology for the defined tasks. Verizon NJ's M&Ps identify certain tasks that technicians must complete during the installations. During the 80 migrations, KPMG Consulting observed approximately 11 tasks per line for a total of 2089 tasks. Factors affecting the number of tasks observed in a given migration include the presence or absence of LNP requirements and existence of a trouble on the line at the time of the migration. KPMG Consulting applied a benchmark of 85% for provisioning accuracy. 2039 of these tasks (97.6%) were executed in accordance to Verizon NJ's M&Ps.
TVV4-11	Verizon NJ's Provisioning Completion Message (PCM), completion dates accurately reflect the service order completion due date.	Satisfied	1156 Provisioning Completion Messages (PCMs) were analyzed to determine if the completion date was consistent with the LSC due date. KPMG Consulting measured provisioning timeliness. KPMG Consulting applied a benchmark of 95% for provisioning accuracy. 1112 PCMs (96%) were provisioned in conformance with the requested due date.
TVV4-12	Verizon NJ's switch translations contain	Satisfied	121 lines were reviewed to determine if Verizon NJ provisioned the switch

[21] Metric PR-9-01: 95% completed within Cut-Over Window. Cut-Over Window: Amount of time from start to completion of physical cut-over of lines: 1 to 9 lines: 1 Hour; 10 to 49 lines: 2 Hours; 50 to 99 lines: 3 Hours; 100 to 199 lines: 4 Hours; 200 or more lines: 8 Hours; if IDLC is involved – 4 Hour Window (8 AM to 12 Noon or 1 PM to 5 PM).

[22] The following Method and Procedure documents were reviewed by KPMG Consulting: RCCC Coordinator's Guide DS1 Unbundled Loop Service RCCC-South, document # RCO-99-1063, NOCIL UNE, document # 9807-18, Operations and Assurance Support Wholesale and Resale I&M Field Support, document # 1999-00320-OSP, OSS Implementation and Standardization for Conversion Coordination for Non-Design UNE, document # 1999-002MP-OSS, Job Aid for UNE Coordinated Conversion Process, document # NOCIL 9907-012A, 2 Wire Analog Loop Provisioning, Including LNP, and IDLC, document # RCO-99-0014.

Test Reference	Evaluation Criteria	Result	Comments
	required field inputs.		translations correctly. KPMG Consulting measured provisioning accuracy. KPMG Consulting applied a benchmark of 95% for provisioning accuracy. 117 lines (97%) were provisioned with the correct switch translations.
TVV4-13	Verizon NJ meets the benchmark for Installation Troubles Reported Within 30 Days.	Satisfied	KPMG Consulting reviewed 138 live CLEC ADSL and hot cut installations to verify that the installations were completed on the agreed-upon due date and that a trouble report was not opened on the circuit within 30 days of order completion. KPMG testers reviewed each circuit to compare the installation quality results to the Carrier-to-Carrier Performance Standard metric PR-4-06-01 Installation Quality.[23] This metric calls for performance results to be compared to Verizon NJ Retail results. Neither Verizon NJ nor CLEC trouble report history logs identified that a trouble was reported on any of these circuits (100% defect free). During the testing period Verizon NJ's retail organization provisioned 92% or 459,481 that satisfied the tenants of this metric and were defect free for greater than 30 days following the completion of the provisioning process.
TVV4-14	Verizon NJ meets the benchmark for percent Installation Troubles Reported Within 7 Days.	Satisfied	KPMG Consulting reviewed 138 live CLEC ADSL and hot cut installations to verify that the installations were completed on the agreed-upon due date and that a trouble report wasn't opened on the circuit within 7 days of order completion. KPMG testers reviewed each circuit to compare the installation quality results to the Carrier-to-Carrier Performance Standard metric PR-4-06-02 Installation Quality. This metric calls for performance results to be compared to Verizon NJ Retail results. Neither Verizon NJ nor CLEC trouble report history logs identified that a

[23] PR4-06-01, PR4-06-02 evaluates the percentage of circuits where a trouble was reported and found in the Verizon network within 30 days (and within 7 days for POTS services) of order completion. This metric includes Drop Wire troubles (Disposition Code 3), Cable troubles (Disposition Code 4), and Central Office troubles (Disposition Code 5).

Test Reference	Evaluation Criteria	Result	Comments
			trouble was reported on any of these circuits (100% defect free). During the testing period Verizon NJ's retail organization provisioned 99% or 465,989 that satisfied the tenants of this metric and were defect free for greater than seven days following the completion of the provisioning process.
TVV4-15	Verizon NJ provisions ADSL Line Sharing circuits by completing documented Method and Procedure tasks.	Satisfied	KPMG Consulting measured Verizon NJ's ability to adhere to tasks defined in their M&P documentation. KPMG Consulting evaluated each ADSL Line Sharing installation to validate that Verizon NJ technicians followed the proper chronology for the defined tasks. Verizon NJ's M&Ps identify certain tasks that technicians must complete during the installations. During 97 installations, KPMG Consulting observed 679 tasks. KPMG Consulting applied a benchmark of 85% for provisioning accuracy. 671 of these tasks (98.8%) were executed in accordance to Verizon NJ's M&Ps.
TVV4-16	Verizon NJ provisions ADSL Line Sharing circuits on the committed due date.	Satisfied	KPMG Consulting observed 97 ADSL Line Sharing installations to verify that the installations were completed on the agreed-upon Frame due date. KPMG Consulting applied a benchmark of 95% for provisioning timeliness. Verizon NJ provisioned 100% of the circuits where facilities were available, on the Frame due date. KPMG Consulting testers observed that 9% of the submitted orders were unable to be provisioned because facilities were unavailable due to a lack of suitable cable and pair outside plant.
TVV4-17	Verizon NJ meets the benchmark for Installation Troubles Reported Within 30 Days for ADSL Line Sharing circuit installations.	Satisfied	KPMG Consulting analyzed 140 live CLEC ADSL Line Sharing installations to verify that the installations were completed on the agreed-upon due date and that a trouble report was not opened on the circuit within 30 days of order completion. KPMG testers reviewed each circuit to compare the installation quality results to the Carrier-to-Carrier

Test Reference	Evaluation Criteria	Result	Comments
			Performance Standard metric PR-4-06-01 Installation Quality.[24] This metric calls for performance results to be compared to Verizon NJ Retail results. Verizon NJ trouble report history logs identified 97.1% of these circuits were defect free. During the testing period Verizon NJ's retail organization provisioned 92%, or 459,481 circuits that satisfied the tenants of this metric and were defect free for greater than 30 days following the completion of the provisioning process.
TVV4-18	Verizon NJ meets the benchmark for Installation Troubles Reported Within 7 Days.	Satisfied	KPMG Consulting reviewed 140 live CLEC ADSL Line Sharing installations to verify that the installations were completed on the agreed-upon due date and that a trouble report was not opened on the circuit within seven days of order completion. KPMG testers reviewed each circuit to compare the installation quality results to the Carrier-to-Carrier Performance Standard metric PR-4-06-02 Installation Quality. This metric calls for performance results to be compared to Verizon NJ Retail results. Verizon NJ trouble report history logs identified that four troubles were reported within seven days following the installation completion. This resulted in a 97.1% compliance rate. During the testing period Verizon NJ's retail organization provisioned 99% or 465,989 circuits that satisfied the tenants of this metric and were defect free for greater than seven days following the completion of the provisioning process. According to test design, any p-value below .0500 leads to a conclusion of a statistically significant deviation from the standard. The p-value for this test was .1344.

[24] PR4-06-01, PR4-06-02 evaluates the percentage of circuits where a trouble was reported and found in the Verizon network within 30 days (and within 7 days for POTS services) of order completion. This metric includes Drop Wire troubles (Disposition Code 3), Cable troubles (Disposition Code 4), and Central Office troubles (Disposition Code 5).

VI. Maintenance and Repair Domain Results and Analysis Section

This page is intentionally blank.

A. Test Results: End-to-End M&R Process Evaluation (PPR15)

1.0 Description

The End-to-End Maintenance and Repair (M&R) Process Evaluation (PPR15) evaluated the functional equivalence of Verizon New Jersey's (Verizon NJ) Maintenance and Repair (M&R) processing for wholesale and retail trouble reports. The end-to-end M&R process includes all activities from the moment a trouble repair call is received by the repair receipt bureau or a trouble ticket is captured in Verizon NJ's systems until the same trouble is closed and the customer is notified of the resolution.

Additionally, this test reviewed wholesale and retail process flows and related methods and procedures adhered to by the various Verizon NJ M&R work centers involved in the end-to-end M&R process. These activities were performed to assess whether there are substantive differences between Verizon NJ retail and wholesale M&R processes and to identify any differences between the processes practiced in the related work centers.

2.0 Methodology

This section summarizes the test methodology.

2.1 Business Process Description

The following sections describe the M&R end-to-end process for wholesale and retail Verizon NJ services.

2.1.1 M&R End-to-End Business Process Description – CLEC/Wholesale

Verizon NJ wholesale customers, specifically, Competitive Local Exchange Carriers (CLECs), contact the Verizon Regional CLEC Maintenance Center (RCMC) with M&R concerns. The RCMC serves as the single point of contact for CLECs verbally reporting troubles. Alternately, CLECs may initiate trouble reports through the Repair Trouble Administration System (RETAS) Web GUI.

CLEC troubles reported via telephone through the RCMC are handled by Repair Service Clerks (RSCs). RSCs are responsible for (i) identifying the type of trouble and affected network element, (ii) checking the trouble ticket to ensure that it was correctly entered (iii) initiating a Mechanized Loop Test (MLT), if appropriate, (iv) providing the customer with a commitment for the completion of the repair, and (v) managing the repair process to closure.

Trouble tickets are created in different systems depending on whether they are for Plain Old Telephone Service (POTS) or Special Service type troubles. POTS and UNE-P trouble tickets are entered into the Loop Maintenance Operations System (LMOS). Special Service trouble tickets for problems affecting Interoffice Facilities (IOF), Unbundled Network Elements (UNEs), DS1 and DS3 circuits are entered into the Workforce Administration Control (WFA/C) system. Troubles entered into either system are designated by handle codes that determine where the trouble ticket is to be routed.

Dispatch in (DI) troubles are routed through WFA/C to WFA/DI (dispatch in) to the Network Operations Center (NOC) for trouble isolation and closeout. DI handle codes route trouble tickets to the following organizations:

- Frame – handles basic troubles such as jumper problems, open heat coils, etc.
- Switching – handles switch troubles other than line translations (e.g., direct-in-dialing and Centrex issues).
- Recent Change Memory Administration Center (RCMAC) – handles troubles such as line translation issues.

Dispatch out (DO) trouble reports are electronically delivered via WFA/DO (dispatch out) to the Verizon NJ Customer Service Center (CSC), which dispatches an outside technician to resolve the reported trouble. Trouble reports are dispatched on a due date and due time basis with no distinction made between wholesale and retail customer circuits. Troubles are prioritized based on (i) whether or not they are out of service trouble reports, and (ii) on system generated repair commitment dates and times.

CLEC/Wholesale customers have the ability to request expedites in out-of-service or other special needs situations as well as escalate repair commitment times verbally with the RCMC and electronically through RETAS. Troubles that require further involvement, such as an unclear determination of the cause of a trouble, the CLEC may wish to schedule a coordinated vendor meet at either a field location, or in the Central Office (CO). At the request of the CLEC, Verizon NJ will send a network technician to meet with the CLEC designee to locate the cause of the trouble for repair by either organization. Appointments are scheduled for the following business day between the hours of 9:00 a.m. and 4:00 p.m.

2.1.2 M&R End-to-End Business Process Description – Retail

Verizon NJ retail customers report trouble calls to their regional Customer Repair Service Center (VRRC). The RSC creates a ticket in either the LMOS or WFA/C systems. Once a retail trouble report is entered, the ticket follows the same resolution process as described above for CLEC faults until the matter is resolved. Additionally, the retail business process flow is consistent with the wholesale process flow with regard to the escalation and expedite of trouble tickets and the coordination of vendor meets. The closure reporting procedure differs from a CLEC trouble in that the Verizon NJ technician notifies the retail customer for ticket closure confirmation upon completing the closeout; however, in the wholesale process the Verizon NJ technician notifies the CLEC for ticket closure confirmation who then notifies its customer, or end user.

The process for wholesale and retail business M&R trouble reporting activity is summarized below in Figure 15.1.

Figure 15-1: Wholesale and Retail Business Process Flow

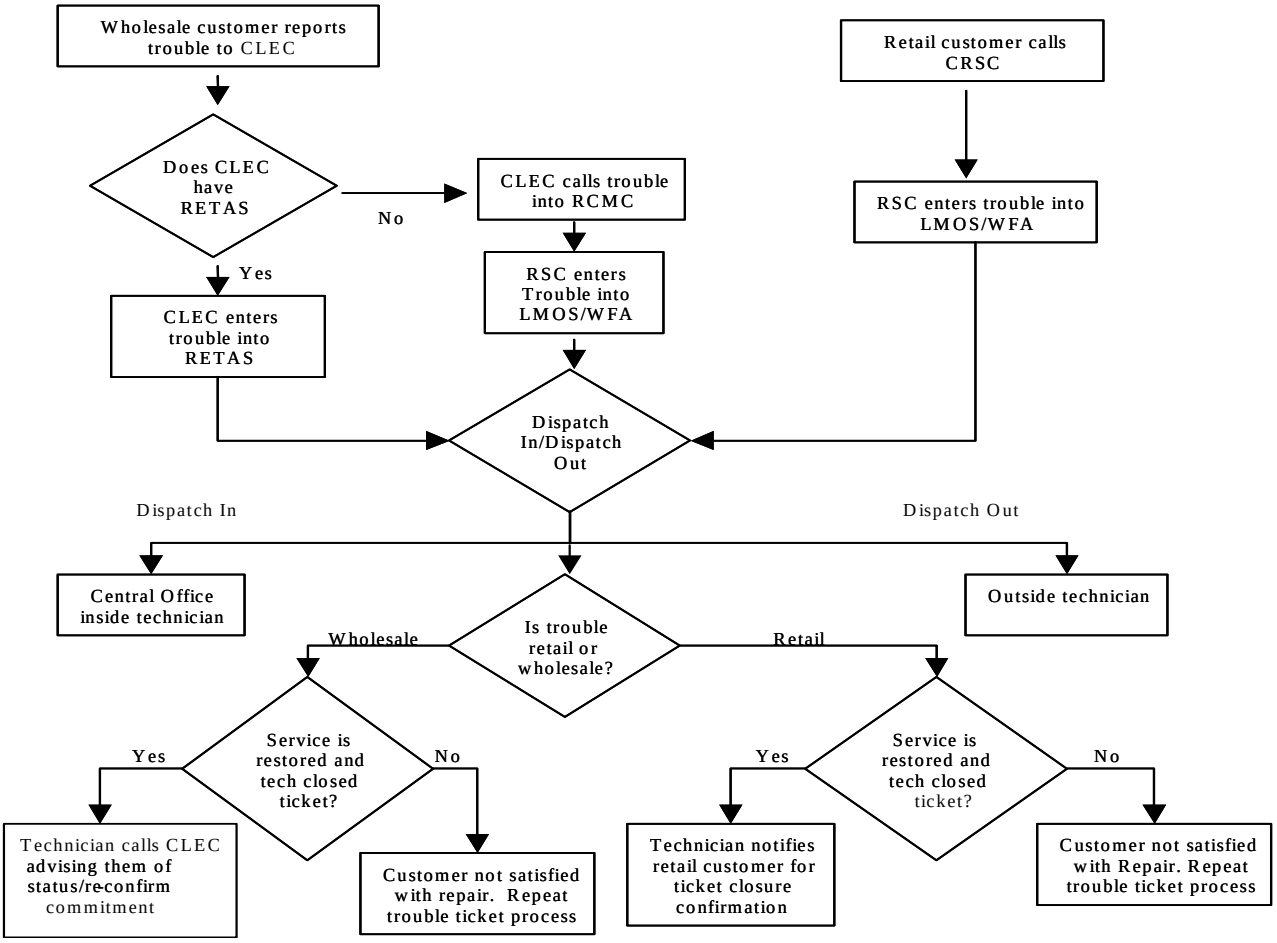

2.2 Scenarios

Scenarios were not applicable to this test.

2.3 Test Targets & Measures

The test target was Verizon NJ's End-to-End M&R Process Evaluation (PPR15) for retail and wholesale, which included reviews of the following processes:

- End-to-End M&R Process Flow: Resale
- End-to-End M&R Process Flow: UNE/UNE-P
- Capacity Management Processes and Procedures

2.4 Data Sources

The data collection performed for this test centered on (i) interviews with and observations of Verizon NJ RCMC personnel with direct responsibility and knowledge of processes and procedures targeted for review, and (ii) reviews of documentation supplied by Verizon NJ at the request of the Test Manager. Primary sources of data include:

- CLEC and Reseller Handbook Series (Volume III) (dated March 2000)
- RCMC Repair Service Clerks' (RSC) training manual (dated January 1, 2000)
- Escalation Policy (WFA Circuits) Maintenance RCMC North and South (dated January 20, 2000)
- Retail and Wholesale trouble ticket handling process flow charts

2.5 Data Generation/Volumes

This test did not rely on data generation or volume testing.

2.6 Evaluation Methods

Verizon NJ end-to-end M&R procedures were reviewed and evaluated according to targets established by the Test Manager. The following provides additional detail on the testing methods used to conduct the evaluation:

- Interviews – KPMG Consulting conducted on-site interviews with Verizon NJ management and staff with direct responsibility and knowledge of targeted processes at retail and wholesale M&R work centers including: (i) Regional CLEC Maintenance Center (RCMC), (ii) Verizon Repair Resolution Center (VRSC)[25], (iii) National Dispatch Resource Center (NCSC[26]), and (iv) Network Operations Center/Dispatch In (NOC/DI).
- Observations – KPMG Consulting performed observations of work center personnel handling trouble-processing activities in order to identify substantive differences between the processes practiced in the work centers and those processes defined in Verizon NJ methods and procedures documentation.

[25] Please note that the VRRC was formerly called the Customer Repair Service Center (CRSC).
[26] Please note that the NCSC was formerly called the Customer Service Center (CSC).

- Documentation Review – KPMG Consulting conducted a review of process flow documentation, methods and procedures, and performance data related to Verizon NJ's retail and wholesale end-to-end M&R business operations.

2.7 Analysis Methods

The End-to-End M&R Process Evaluation (PPR15) included a checklist of evaluation criteria developed by the Test Manager during the initial phase of the Verizon NJ OSS Evaluation. These evaluation criteria provided the framework of norms, standards, and guidelines for the End-to-End M&R Process Evaluation (PPR15).

The data collected were analyzed employing the evaluation criteria referenced in Table 15-1.

3.0 Results

This section identifies the evaluation criteria and test results.

3.1 Results Summary

The results of this test are presented in Table 15-1 below.

Table 15-1: PPR15 Evaluation Criteria and Results

Test Reference	Evaluation Criterion	Result	Comments
End to End M&R Process: Resale and UNE/UNE-P			
PPR15-1	The M&R trouble-handling process is comparably administered for wholesale and retail customers.	Satisfied	KPMG Consulting observed the trouble handling process used by retail and wholesale work center personnel and verified that the trouble handling process (i) followed documented methods and procedures (M&Ps), and (ii) comparably serves retail and wholesale customer needs. Verizon NJ provides its CLEC customers with high-level descriptions of the steps required prior to contacting the RCMC. Additionally, Verizon NJ maintains an Intranet, which is a repository for all M&Ps, job aids, contact information and technical reference materials related to the wholesale and retail M&R trouble handling process. KPMG Consulting reviewed this documentation and verified that it defines trouble-handling procedures that are designed to produce equivalent levels of service for both wholesale and retail customers. KPMG Consulting also reviewed internal Verizon NJ process flows for handling retail and wholesale trouble reports and verified that once a trouble ticket is submitted into Verizon NJ's M&R support systems, the M&R trouble resolution process is the same for retail and wholesale services. Processes relating to the handling of CLEC and retail customer troubles are defined and documented in the

Test Reference	Evaluation Criterion	Result	Comments
			following: ◆ Verizon CLEC Handbook, Volume III ◆ Verizon Resale Handbook, Volume III ◆ RCMC RSC Training Guide (lists all common procedures for resolving troubles with CLECs) ◆ RCMC Job Aid (defines wholesale process responsibilities and activities) ◆ RETAS CLEC Handbook ◆ Retail and Wholesale Trouble Ticket Handling Process Flow Charts
PPR15-2	The process for trouble diagnosis and appointment scheduling is comparably administered for wholesale and retail customers.	Satisfied	Through interviews conducted with Verizon NJ retail and wholesale work center personnel, KPMG Consulting verified that the process for trouble diagnosis and appointment scheduling is comparably administered for wholesale and retail customers. The RCMC provides its RSCs with documentation regarding common procedures for trouble diagnosis and scheduling appointments. RSCs have the RCMC training guide and the Regional CLEC Maintenance Center – Center Job Aid. These documents are available to personnel on the Verizon Intranet.
PPR15-3	Customer dispute resolution procedures are comparably administered for wholesale and retail customers.	Satisfied	Through on-site interviews conducted with Verizon NJ retail and wholesale work center personnel, KPMG Consulting verified that customer dispute resolution procedures are comparable between wholesale and retail. Additionally, KPMG Consulting observed work center personnel handling customer requests for escalations and coordinated Vendor Meets and verified that dispute resolution procedures are handled comparably between retail and wholesale work centers. Following is a list of Verizon NJ documentation that defines policies for trouble ticket dispute resolution procedures, including escalation and vendor meet procedures. KPMG Consulting reviewed this documentation and verified that it defines trouble ticket dispute resolution procedures that are designed to produce equivalent levels of service for both wholesale and retail customers. ◆ Vendor Meet Process for UNE Loops – Dispatch Out – Regional RCMC ◆ Verizon Vendor Meets FLASH ◆ Verizon Method & Procedure Release – Operations Staff – Service Delivery – Dispatch/Administration Support ◆ Verizon M&P Release – Operations Assurance and

Test Reference	Evaluation Criterion	Result	Comments
			Support (Wholesale & Resale I/M Field Support) – Unbundled 2 Wire Digital Loop – ADSL Qualified ◆ RCMC Escalation Policy
PPR15-4	The trouble ticket closing process is comparably administered by wholesale and retail customers.	Satisfied	Through interviews conducted with Verizon NJ retail and wholesale work center personnel, KPMG Consulting verified that the trouble ticket closing process for trouble diagnosis and appointment scheduling is comparably administered for wholesale and retail customers. Following is a list of Verizon NJ job aides and M&Ps that discuss trouble ticket close out procedures. KPMG Consulting reviewed this documentation and verified that it defines trouble ticket close out procedures that are designed to produce equivalent levels of service for both wholesale and retail customers. ◆ Trouble Close Out Process ◆ Vendor Meet Process for UNE Loops
Capacity Management			
PPR15-5	Established processes for evaluating and adjusting resource and office space utilization are comparable between retail and wholesale work centers.	Satisfied	Through interviews conducted with Verizon NJ retail and wholesale work center personnel, KPMG consulting verified that established processes for evaluating and adjusting resource utilization are comparable between retail and wholesale work centers. At the RCMC, the volume of calls received, trouble tickets generated, and other measures are tracked by the Pinnacle ACD Looking Glass reporting system. Similar plans are in place at the VRRC. This center also tracks call volume, trouble tickets generated, and other work measures captured by their ACD system, which is equipped with an RT 1000 Management Information System (MIS). This enables the VRRC centralized staff to forecast 13 months out, as well as allow for a certain amount of customization of the forecast. Reports generated by operational support systems, such as LMOS and WFA, are also utilized. Both the wholesale and retail work centers use the reporting information generated from the Pinnacle ACD system to submit forecasts annually for approval and funding allocation. Personnel decisions are based on the forecasts and business trends, as are decisions involving the addition or deletion of physical facilities. KPMG Consulting reviewed performance metric documentation generated from the Pinnacle ACD system and found that information necessary to evaluate and adjust resources is captured comparably between wholesale and retail work centers.

Test Reference	Evaluation Criterion	Result	Comments
PPR15-6	Established processes for incorporating capacity management plans into the business plan are consistent between wholesale and retail work centers.	Satisfied	During interviews with wholesale and retail work center personnel, KPMG Consulting verified that the established processes for incorporating capacity management into the business plan are consistent between wholesale and retail work centers. The volume of calls received, trouble tickets generated, and other measures are tracked by the Pinnacle ACD Looking Glass reporting system. The center director uses this information to forecast volumes and required resources for the three RCMCs. These forecasts are submitted annually to the Regional Operations staff for inclusion in the Regional Operations long-range business plan and are also used to support center budgets. This process is the same for both wholesale and retail work centers. KPMG Consulting reviewed the RCMC Operations Plan for the fourth quarter 1999 through 2000 and verified that it contains resource forecasts based on projected call volumes.

B. Test Results: M&R Work Center Support Evaluation (PPR16)

1.0 Description

The Maintenance and Repair (M&R) Work Center Support Evaluation (PPR16) was a comprehensive operational analysis of the work center processes developed by Verizon New Jersey (Verizon NJ). These processes and procedures provide support to Competitive Local Exchange Carriers (CLECs) with questions, problems, and issues related to wholesale trouble reporting and repair operations. Work center processes include creating trouble tickets, managing and monitoring open trouble tickets, resolving troubles, closing trouble tickets, and providing trouble ticket status information. Basic functionality, performance and escalation procedures were evaluated. In addition, this evaluation included a review of the activities associated with the Repair Trouble Administration System (RETAS) Help Desk that is also supported by the work center.

2.0 Methodology

This section summarizes the test methodology.

2.1 Business Process Description

2.1.1 Work Center Business Process Description

The CLECs operating in New Jersey are provided M&R support by Verizon NJ through the Regional CLEC Maintenance Center (RCMC). The RCMC has three locations: (i) Richmond, VA, (ii) Bridgewater, NJ, and (iii) East Brunswick, NJ. The RCMC records and responds to CLEC questions regarding trouble tickets for the states in the Verizon operating area. The RCMC is the primary point of contact for CLEC reported troubles regardless of the type of service being reported, including Unbundled Network Elements (UNE), Resale and Interoffice Facilities (IOF). The RCMC is accessible to CLECs 24 hours a day, seven days a week, 365 days a year.

The business process is identical for the three offices and all RCMCs operate according to the same methods and procedures; however, each center has a different product line that it covers for the entire Verizon footprint. The Richmond RCMC serves as the primary call receipt center for the region and deals mainly with Plain Old Telephone Service (POTS) troubles. The center is responsible for opening trouble tickets pertaining to any type of trouble except for high capacity circuits and line sharing, managing POTS tickets during the repair process, and closing UNE-Loop tickets after being cleared by technicians. The Bridgewater, NJ RCMC is responsible for managing, screening, and closing troubles pertaining to DSL stand alone loops, and handling escalations for DSL and line sharing troubles. Twenty-eight Network Technicians, who assist Verizon field technicians, also work in the Bridgewater RCMC. Most of the calls received by Network Technicians are internal and involve cooperative testing. The East Brunswick, NJ RCMC opens, manages, and closes troubles relating to line sharing, high capacity circuits, and collocation. This center also manages escalations pertaining to line sharing troubles.

Calls coming into the RCMC are routed through the Pinnacle Automatic Call Distributor (ACD), which captures call metrics including the time and duration of each call. The ACD is linked to the Total View system, which is a tool employed by Verizon NJ to develop call volume forecasts and workforce schedules. Call metrics captured in the ACD are viewed and reported through the Pinnacle Looking Glass system, which produces call statistics used to manage the center.

Repair Service Clerks (RSCs)/Maintenance Administrators (MAs)[27] open trouble tickets and log each trouble report into the appropriate internal Verizon system. The Work Force Administration (WFA) system is used to report special circuits problems and the Loop Maintenance Operating System (LMOS) is used to report POTS problems. Both systems assign tracking numbers to trouble tickets. Relevant customer information and a description of the problem are then captured. The trouble tickets are closed out when the problem is resolved immediately, or routed to the appropriate work group for repair. The trouble tickets are closed upon resolution and the closure time and date are entered into the database by the RSCs. CLECs are notified of closures and a notation of such contacts is entered into the database.

Figure 16-1 below depicts the relationships between the RCMC and other Verizon NJ organizations. The single or bi-directional arrows illustrate the information flow between the various centers. The diagram also identifies the functional areas covered by the relationships.

Figure 16-1: RCMC Relationships

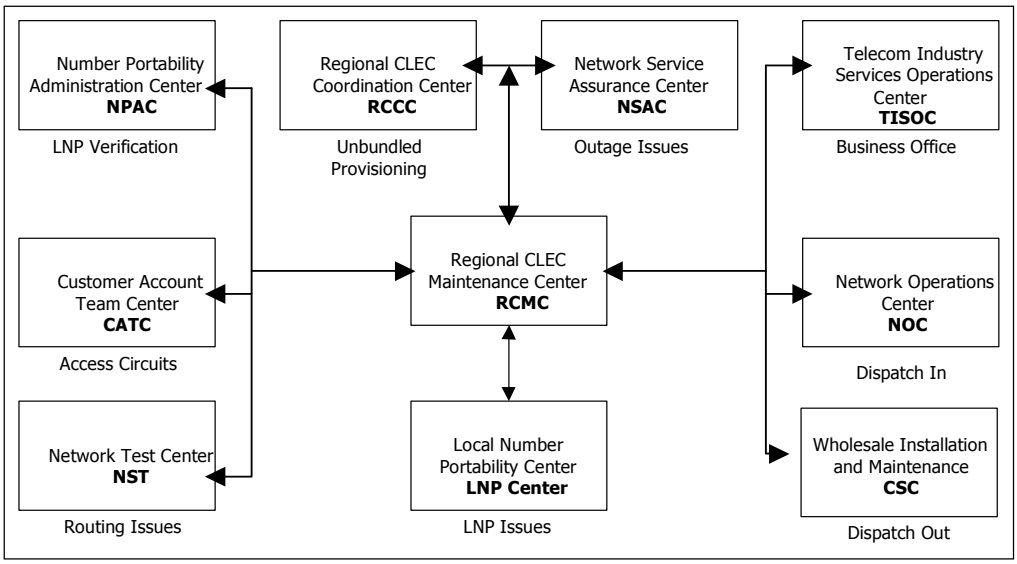

[27] Repair Service Clerk (RSC) is interchangeable with Maintenance Administrator (MA). Both RSC and MA are used to refer to the RCMC representative responsible for handling incoming maintenance trouble calls. RSC is the term used at the East Brunswick, NJ and Bridgewater, NJ RCMCs while the Richmond, VA RCMC uses the term MA.

RETAS Help Desk Process Description

The RETAS Help Desk is located within the RCMC and serves as the single point of contact for CLECs needing assistance with the Repair Trouble Administration System (RETAS). RETAS is a web based Graphical User Interface (GUI) used by CLECs to communicate their maintenance requests to Verizon NJ.[28] CLECs experiencing issues with RETAS transactions, including data entry problems or user error messages, call the RETAS Help Desk via a toll free number. The RETAS Help Desk is accessible to CLECs 24 hours a day, seven days a week, 365 days a year. The Bridgewater, NJ RCMC manages the RETAS help desk between 7 a.m. and 12 a.m.; the East Brunswick, NJ RCMC is responsible for coverage between 12 a.m. and 7 a.m.

2.2 Scenarios

Scenarios were not applicable to this test.

2.3 Test Targets & Measures

The test target was Verizon NJ's work center support functions, which included reviews of the following process areas and sub-processes:

- Call Processing
  - Call Answer
  - Call logging
  - Prioritization
- Problem Tracking and Resolution
  - Documentation
  - Identify and Resolve
  - Track Problem
  - Log status and close
  - Notify Customer
- Expedite/Escalation Procedures
  - Documentation
  - Call answer
  - Escalation logging
  - Identify and resolve
  - Log status and close
  - Notify customer
- Work Center Procedures
- Manual handling –Resale
- Manual handling UNE/UNE-P Combinations
- Capacity Management
  - Capacity management processes and procedures

[28] A detailed evaluation of the functionality of RETAS was performed as part of KPMG Consulting's M&R Functional Evaluation (TVV5).

2.4 Data Sources

The data collection performed for this test entailed (i) interviews with and observations of Verizon NJ RCMC personnel with direct responsibility and knowledge of processes and procedures targeted for review, and (ii) reviews of documentation supplied by Verizon NJ at the request of the Test Manager. Primary sources of data include:

- CLEC and Reseller Handbook Series (Volume III) (dated March 2000)
- RCMC Repair Service Clerks' (RSC) training manual (dated 1-1-00)
- Escalation Policy (WFA Circuits) Maintenance RCMC North and South (dated 1-20-00)
- Various RCMC Call Performance Metric Reports based call statistics captured from the ACD system
- RCMC Quality Assurance Plan (dated 6-1-99) and associated completed quality review forms

2.4.1 Data Generation/Volumes

This test did not rely on data generation or volume testing.

2.5 Evaluation Methods

Verizon NJ M&R Work Center procedures were reviewed and evaluated according to targets established by the Test Manager. The following provides additional detail on the testing methods used to conduct the M&R Work Center Support Evaluation:

- Interviews – KPMG Consulting conducted on-site interviews with management and staff with direct responsibility and knowledge of targeted processes in the Bridgewater, NJ, East Brunswick, NJ, and Richmond, VA RCMCs.
- Observations – KPMG Consulting performed observations of RCMC personnel performing trouble processing activities in order to identify substantive differences between the processes practiced in the RCMC and those processes defined in Verizon NJ methods and procedures documentation.
- Documentation Review – KPMG Consulting conducted a review of process flow documentation, methods and procedures, and performance data related to RCMC business operations.

2.6 Analysis Methods

The M&R Work Center Support Evaluation (PPR16) included evaluation criteria developed by the Test Manager during the initial phase of the Verizon NJ OSS Evaluation. These evaluation criteria provided the framework of norms, standards, and guidelines for this test.

The data collected from interviews, observations and documentation reviews were analyzed against the evaluation criteria referenced in Section 3.1 below.

3.0 Results

This section identifies the evaluation criteria and test results.

3.1 Results Summary

The results of this test are presented in Table 16-1 below.

Table 16-1: Evaluation Criteria and Results

Test Reference	Evaluation Criteria	Results	Comments
Call Processing			
PPR16-1	M&R work center responsibilities and activities are defined and documented.	Satisfied	The specific responsibilities and activities of the RCMC are defined and documented in the RCMC Repair Service Clerks' (RSC) training manual as well as in various job aids provided in hard copy to each RSC. These documents describe the requirements for trouble identification, trouble ticket creation, standard intervals, and monitoring ticket status. As procedures change, new job aids and memos are created and distributed via the Verizon intranet and in hard copy. In addition to the RSC training manual and related job aids, the following documents outline RCMC, CLEC and Reseller responsibilities and activities: ◆ Verizon Trouble Reporting Requirements for CLECs ◆ CLEC Handbook Series (Volume III) – Section 8.2 The CLECs Role in Trouble Administration and Section 8.3 Verizon's Role in Trouble Administration ◆ Resellers Handbook Series (Volume III) – Section 6.2 The Reseller's Role in Trouble Administration and Section 6.3 Submitting Trouble Reports in Verizon Electronically During a visit to the RCMC, KPMG Consulting observed that formal written policies and procedures are available to employees on the Verizon intranet and hard copies are located throughout the center. When updates are made to the methods and procedures, they are posted on the Verizon intranet prior to the implementation of changes.

Test Reference	Evaluation Criteria	Results	Comments
			KPMG Consulting reviewed these documents and found that the documents define the scope and objectives of the RCMC as well as customer responsibilities and activities.
PPR16-2	M&R work center call intake and trouble ticket generating procedures are operationally complete.	Satisfied	During interviews with RCMC personnel, KPMG Consulting verified that the RCMC has complete call intake and trouble ticket generating methods and procedures, which are defined in the RCMC Repair Service Clerks' (RSC) training manual. Additionally, RSCs are provided with worksheets that detail information needed to complete trouble tickets. Issues that cannot be resolved by an RSC are resolved via an existing and defined escalation process.[29] Incoming calls are automatically routed through the Pinnacle ACD system. Once a caller selects an option from the main menu, the call is sent into the call queue where calls are handled on a first in first out basis. Incoming calls are not prioritized beyond that regardless of severity, category or CLEC. Callers placed on hold are tracked by the ACD system by elapsed time (i.e., the timing begins when the caller is placed on hold and stops at the conclusion of the conversation with the RSC). The three RCMCs can transfer calls between locations, in case of unexpected call volumes, service interruptions and to improve caller response times. KPMG Consulting reviewed the training manual referenced above as well as related directives and job aids, and found that the documents define the scope of M&R work center call intake and trouble ticket generating procedures.
Problem Tracking and Resolution			
PPR16-3	M&R work center procedures for trouble ticket status tracking are operationally complete.	Satisfied	Trouble tickets are assigned a tracking number and maintained in the Pinnacle ACD. At any time, CLECs have the ability to call the RCMC to receive trouble ticket status information. In addition, CLECs can track the status of a trouble ticket by accessing RETAS. The procedures for providing status to a CLEC are defined in a job aid in the RCMC RSC Training Manual. KPMG Consulting reviewed this documentation and verified that it defines the procedures for tracking the status of a trouble ticket.

[29] The defined Verizon-NJ escalation process is detailed in the comments related to reference PPR16-6 in this table.

Test Reference	Evaluation Criteria	Results	Comments
PPR16-4	M&R work center procedures for trouble ticket closure and customer notification are operationally complete.	Satisfied	During interviews with RCMC personnel, KPMG Consulting verified that inside technicians work through the RCMC to close out tickets. The outside technician's process is to contact the CLEC; however, they may call the RCMC and request that the contact is made by the RCMC. During a visit to the RCMC, KPMG Consulting observed MAs closing out CLEC trouble tickets in accordance with documented methods and procedures. The trouble closeout process is defined and documented in a Verizon Flash entitled TXNU & TXSU Trouble Close Out in WFA/C – RCMC Doc. No. RCO-99-1004. The WFA/C Quality Control for Maintenance Trouble Tickets M&P Doc. No. RCO-99-1001, outlines the process RSC attendants must follow for trouble ticket close outs. KPMG Consulting reviewed this documentation and verified that it defines the procedures for trouble ticket closure and customer notification.
PPR16-5	The M&R work center RETAS Help Desk is available to assist users with the RETAS application.	Satisfied	During interviews with RCMC personnel, KPMG Consulting verified that CLECs experiencing problems entering troubles via RETAS, including data entry problems or user error messages, can call the RETAS Help Desk via a toll free number for assistance. The RETAS Help Desk is accessible to CLECs 24 hours a day, seven days a week, 365 days a year. Using a universal CLEC code that provides read-only access, RETAS Help Desk personnel can view data transmitted by the CLEC, isolate errors and advise the CLEC on how to properly enter the trouble ticket. Calls relating to RETAS navigational and process issues are referred to the GUI Help Desk located in the Newark, NJ Verizon TISOC. As part of transaction testing activities for End-to-End Trouble Report Processing, KPMG Consulting accessed the RETAS Help Desk on several occasions during peak business hours (7:00 a.m. and 7:00 p.m.) Additionally, KPMG Consulting made test calls between the hours of 7:00 p.m. and 7:00 a.m. and verified that the RETAS Help Desk was also available during non-peak hours.

Test Reference	Evaluation Criteria	Results	Comments
Expedite/Escalation Procedures			
PPR16-6	Work center problem escalation/expedite procedures are operationally complete.	Satisfied	During observations of personnel working at the RCMC Escalation Help Desk, KPMG Consulting verified that when handling escalations, the RCMC follows methodologies described in the escalation procedure for POTS UNE loops and vendor meets.[30] This procedure details first, second, and third level escalation criteria as well as proper logging methodologies. Escalations are logged in a LOTUS Notes database as standard trouble reports. Additional escalation procedures are outlined in the Verizon Job Aid – Escalation Policy (WFA Circuits) – Maintenance RCMC Doc. No. RCO-99-1080. Back down procedures are used for negotiating escalation or commitment times. A Verizon Flash entitled Regional Appointment Backdown Procedures Doc. No. RCO-98-0012 outlines the process to follow in the RCMC when an earlier commitment time is requested by the CLEC. The Service Delivery Escalation Process for CLECs and Resellers is posted on the Verizon NJ external website. CLECs also have the direct contact number for the Verizon NJ escalation manager. KPMG Consulting reviewed the RCMC escalation documentation and verified that it outlines the escalation procedures and process flow and provides contact information needed to escalate a trouble.
Work Center Procedures			
PPR16-7	M&R work center procedures include contingency action plans for business functions in the event of a system outage.	Satisfied	During interviews with RCMC personnel, KPMG Consulting verified that the RCMC has documented plans in the event of a system outage. If there is a major system outage with LMOS or WFA-C, the RSCs will follow the "Manual Process" outlined on page 2 of the RCMC Major System Failure Procedures, Doc. No. RCO-99-1053. As an added measure, the RCMC has backup power protection via UPS (uninterrupted power supply) as well as a backup generator with a one second delay. Procedures for continued operation during environmental, major and minor systems failures are outlined in the RCMC Center Manager Business Continuity Plan. During a visit to the RCMC, KPMG Consulting observed that the written policies and procedures noted above are available electronically to employees on the Verizon intranet as well as in hard copy throughout the

[30] For a more detailed assessment of the Vendor Meet process, see the M&R Coordination Process Evaluation (PPR17) section of this report.

Test Reference	Evaluation Criteria	Results	Comments
			center. KPMG Consulting reviewed these documents and found that they define the contingency action plans for business functions in the event of a system outage at the RCMC.
PPR16-8	Procedures for staff training at M&R work centers are operationally complete.	Satisfied	During interviews with RCMC personnel, KPMG Consulting verified that the RCMC has an internal training organization that provides training for new employees and retraining for existing employees on policy and procedure changes. This group is also responsible for frequent updates to the training manual given to each RSC. New hires undergo structured training and receive a comprehensive training manual (the RCMC Repair Service Clerks' (RSC) training manual), which details call handling procedures and processes as well as tips, hints, and scripts for call handling. KPMG Consulting reviewed the training curriculum outlined in the RCMC RSC training manual and found it to be operationally complete.
PPR16-9	Staff performance monitoring procedures at M&R work centers are operationally complete.	Satisfied	During interviews with RCMC personnel, KPMG Consulting verified that the RCMC maintains processes and procedures for monitoring staff performance. Verizon NJ maintains measurements used to judge RSC performance based on call response time, quality of service and accuracy. After initial training, RSCs receive monthly reviews to assess performance and individual training is provided to correct deficiencies and improve call-handling skills. In order to ensure established procedures and policies are enforced, assistant managers at the RCMC regularly screen calls (ghosting). In addition, a staff of screeners reviews every trouble report prior to closeout. Assistant managers are also required to conduct service observations of each employee a minimum of four times per year. After an observation, an assistant manager provides feedback within 24 hours. The above procedures are referenced in the Quality Assurance Plan. KPMG Consulting reviewed this document and found that it defines the scope of Verizon NJ's staff performance monitoring process.[31]
PPR16-10	Procedures for capturing M&R work center business and transaction volumes are operationally complete.	Satisfied	The Pinnacle ACD Looking Glass system produces reports that show call volumes by half-hour segment and speed of answer. Reports are generated by designating variables such as type of call or geographic area.

[31] See reference PPR16-9 in this table for additional information on work center staff performance objectives.

Test Reference	Evaluation Criteria	Results	Comments
	operationally complete.		Reports are generated daily and used for forecasting and performance evaluation. KPMG Consulting reviewed various RCMC call metrics reports generated from the Looking Glass system and found that the service results are tabulated and reported.
PPR16-11	M&R work centers have procedures for maintaining security and integrity of data access controls.	Satisfied	During interviews with RCMC personnel, KPMG Consulting verified that CLECs are required to access the trouble reporting system RETAS using Secure IDs and passwords. Verizon RSCs have read-only access to CLEC RETAS information and need the CLEC's password to gain access. A lockout mechanism requires reestablishing a password in person after a certain number of failed attempts. CLEC problems with Secure ID card access and password resets are referred to the Verizon Virtual Solutions Center located in Maryland. An RSC is required to verify the caller's identification as well as the CLEC customer's name and address before a trouble ticket is processed. During a visit to the RCMC, KPMG Consulting observed MAs answering CLEC calls and adhering to this process. The policies and procedures outlined above are documented in the RCMC Repair Service Clerks' (RSC) training manual and are available electronically to employees on the Verizon intranet as well as in hard copy throughout the Center.
Manual Handling Resale and UNE/UNE-P			
PPR16-12	The M&R work center has call handling objectives that are based on satisfying defined performance objectives.	Satisfied	During interviews with RCMC personnel, KPMG Consulting verified that work center performance objectives are set in accordance with guidelines in the Quality Assurance Plan. Additionally, the guidelines include procedures for handling errors and are available electronically to employees on the Verizon intranet as well as in hard copy throughout the work center. The plan dictates that eighty-five percent (85%) of the center's calls be answered within 20 seconds. These call statistics are measured and reported through the ACD management information system. In addition, team leaders monitor a minimum of four customer call sessions per attendant each month for quality assurance purposes. Procedures to resolve attendant errors are defined in the following documents: ◆ WFA/C Quality Control for Maintenance Trouble Tickets M&P Doc. No. RCO-99-1001

Test Reference	Evaluation Criteria	Results	Comments
			◆ RCMC Quality Assurance Plan A Jeopardy Management Group[32] (JMG) is responsible for screening trouble reports in order to manage and resolve errors within the stated intervals. JMG screeners identify and correct error and refer them to the appropriate manager, who provides feedback to the employee responsible for the creating the error. Error information is used to target training and job aid development. The information is also used to evaluate the impact of training within a work group or to support quality inspection programs within the RCMC. During a visit to the RCMC, KPMG Consulting observed a screener responsible for reviewing trouble cases to evaluate compliance with process requirements. All observed trouble cases were handled in accordance with methods and procedures. KPMG Consulting reviewed the methods and procedures referenced above and found that the documents define call-handling objectives for all call types.
Capacity Management			
PPR16-13	Procedures for evaluating and adjusting center resources are operationally complete.	Satisfied	During interviews with RCMC personnel, KPMG Consulting verified that the RCMC maintains a process for evaluating and adjusting resources and office space and that augmentation of the center's office infrastructure is based on projected growth. Long-range forecasting is done on a monthly and quarterly basis to develop a capacity plan that estimates future personnel, space, and equipment requirements. Projected increases in call volumes resulted in establishing the newest facility in Richmond, VA in 2000. Service level objectives require that 85% of the center's calls be answered within 20 seconds. Statistics are collected from the Pinnacle ACD system to monitor utilization and report compliance with service level objectives. Additional resources are deployed when service levels do not meet objectives. KPMG Consulting reviewed RCMC performance metric documentation generated from the Pinnacle ACD system and found that information necessary to evaluate and adjust resources is captured. Also during its analysis, KPMG Consulting verified that the Verizon RCMC has met or exceeded the service level of 85% of the calls handled in 20 seconds for its operations in New Jersey. Reports reviewed covered the period of August,

[32] Also referred to as the RCMC Screening Group.

Test Reference	Evaluation Criteria	Results	Comments
			2000 through June 2001.
PPR16-14	There are established processes for incorporating capacity management into the business plan.	Satisfied	During interviews with RCMC personnel, KPMG Consulting verified that the RCMC has established processes for incorporating capacity management into the business plan. The RCMC Director stated the following: The volume of calls received, trouble tickets generated, and other measures are tracked by the Pinnacle ACD Looking Glass reporting system. The RCMC Director uses this information to forecast volumes and required resources for the three RCMCs. This forecast is submitted annually to the Regional Operations staff for inclusion in the Regional Operations long-range business plan and is also used to support center budgets. Funding for capacity management plans is secured in two ways: (i) annually, an expense plan is submitted for future growth activity for the next fiscal year, and (ii) in the event of unexpected volume growth, a window exists for the center to solicit funds. The addition of the new RCMC in Richmond VA is a result of these contingency safe guards. KPMG Consulting reviewed the RCMC Operations Plan for the fourth quarter of 1999 through 2000, which contained resource forecasts based on projected call volumes. The RCMC Director stated that the information from the RCMC Operations Plan is used to define the overall Regional Operations business plan.

C. Test Results: M&R Coordination Process Evaluation (PPR17)

1.0 Description

The Maintenance and Repair (M&R) Coordination Process Evaluation (PPR17) was a review of the processes, procedures, and other operational elements associated with M&R coordination activities between Verizon New Jersey (Verizon NJ) and commercial Competitive Local Exchange Carriers (CLECs), including third party vendors.

2.0 Methodology

This section summarizes the test methodology.

2.1 Business Process Description

M&R coordination activities between Verizon NJ and CLEC organizations include participation in coordinated Vendor Meets. The Regional CLEC Maintenance Center (RCMC) is the single point of contact responsible for receiving and handling CLEC Vendor Meet requests.

A Vendor Meet is generally requested by a CLEC when either the CLEC or Verizon was able to successfully isolate and repair a trouble causing condition independently. Only the CLEC is authorized to request a Vendor Meet. Once this request is made, Verizon NJ and the affected CLEC schedule a Vendor Meet to interactively isolate and clear the trouble. The location of a Vendor Meet may vary, but it is typically held at a mutually agreed-upon location such as the origination point of the reported trouble, or at the demarcation of each company's testing capabilities for the reported circuit.

Verizon NJ classifies a Vendor Meet as either Dispatch-Out (DO) or Dispatch-In (DI). DO refers to a Vendor Meet that takes place outside Verizon NJ Central Offices, such as the customer's premise. DI refers to a Vendor Meet that takes places inside a Verizon NJ central office. Verizon NJ, CLECs, and, where appropriate, third-party vendors meet to attempt to resolve chronic troubles, conduct coordinated analysis on switch circuits, isolate hard-to-find faults, verify an existing trouble, diagnose cause, and take the proper action to resolve the fault. The tone of the meeting is informal, with the outcome generally producing a remedy to the issue.

The figure below illustrates the coordinated Vendor Meet process with associated systems:

Figure 17-1: Coordinated/Vendor Meet Process

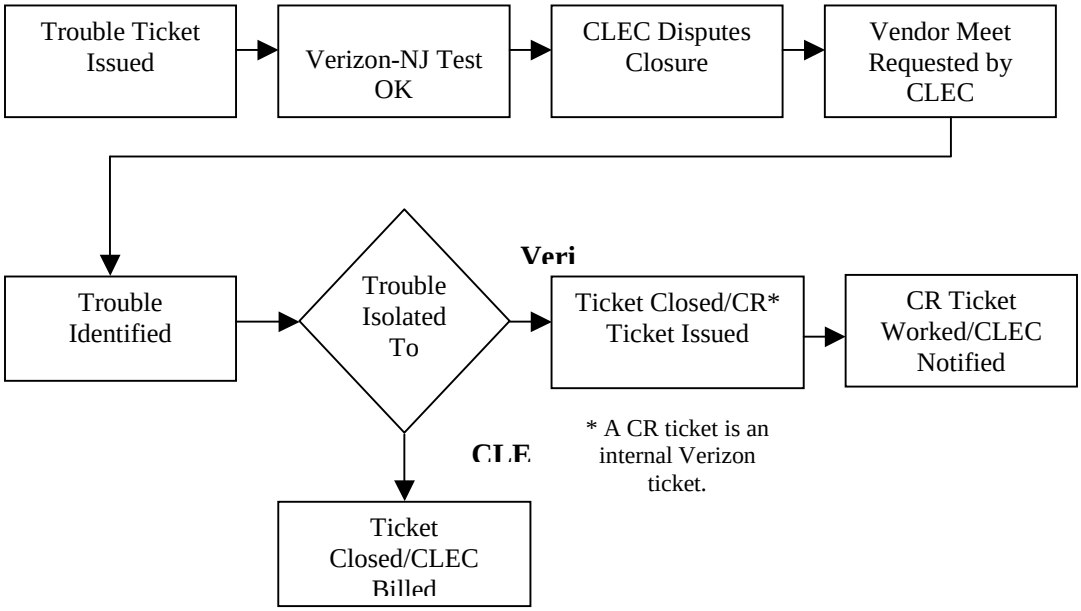

2.2 Scenarios

Scenarios were not applicable to this test.

2.3 Test Targets & Measures

The test targets were the Vendor Meet procedures and coordinated testing efforts between Verizon NJ and the participating CLECs including the following processes and sub-processes:

- Meet Procedures
  - Process Documentation
  - Notification Procedures
- Coordinated Testing
  - Process Documentation
  - Notification Procedures

2.4 Data Sources

The data collected for this test relied on (i) interviews conducted with Verizon NJ managers and personnel with direct responsibility and knowledge of targeted processes; (ii) observations of live CLEC coordinated vendor meets; and (iii) comprehensive reviews of internal coordinated vendor meet methods and procedures supplied by Verizon NJ at KPMG Consulting's request.

2.4.1 Data Generation/Volumes

This test did not rely on data generation or volume testing.

2.5 Evaluation Methods

Verizon Vendor Meet procedures were reviewed and evaluated according to targets established by the Test Manager. The following provides additional detail on the testing methods used to conduct the M&R Coordination Process Evaluation:

- Interviews – KPMG Consulting conducted on-site interviews with management and staff with direct responsibility and knowledge of targeted processes in the Bridgewater, NJ and Richmond, VA RCMCs.
- Observations – KPMG Consulting attended coordinated Vendor Meets to observe and document the processes of Verizon NJ and CLEC interaction toward completing unresolved trouble reports. These observations were performed to assess the compliance of Verizon NJ personnel handling Vendor Meets to methods and procedures defined in Verizon NJ supplied documentation.
- Documentation Review – KPMG Consulting conducted a review of internal documentation provided by Verizon NJ related to the CLEC Vendor Meet process. Additionally, a comprehensive review was conducted of the trouble ticket history and closeout information associated with the CLEC Vendor Meets observed. Particular focus was placed on verifying that proper Disposition Codes and Cause Codes were used when closing out the trouble tickets. A Disposition Code identifies defects in equipment or facilities, and customer error or misuse of telephone company or customer equipment. A Cause Code defines the immediate cause of a trouble.

2.6 Analysis Methods

The M&R Coordination Process Evaluation (PPR17) included a checklist of evaluation criteria developed by the Test Manager during the initial phase of the Verizon NJ OSS Evaluation. These evaluation criteria provided the framework of norms, standards, and guidelines for this test.

The data collected from interviews, observations and documentation reviews were analyzed by employing the evaluation criteria referenced in Section 3.1 below.

3.0 Results

This section identifies the evaluation criteria and test results.

3.1 Results Summary

The results of this test are presented in Table 17-1 below.

Table 17-1: PPR17 Evaluation Criteria and Results

Test Reference	Evaluation Criteria	Result	Comments
PPR17-1	Methods and procedures for CLEC coordinated Vendor Meets are defined and documented.	Satisfied	The following Verizon documentation outlines and defines policies for CLEC Vendor Meets: ◆ Vendor Meet Process for UNE Loops – Dispatch Out – Regional RCMC (dated December 12, 2000) ◆ Verizon Vendor Meets FLASH. Doc. No. 2000-00390-MDP Issue B (Dated December 12, 2000) ◆ Verizon Method & Procedure Release – Operations Staff – Service Delivery – Dispatch/Administration Support. Doc. No. 2000-003830-MDP (Dated December 12, 2000) ◆ Verizon M&P Release – Operations Assurance and Support (Wholesale & Resale I/M Field Support) – Unbundled 2 Wire Digital Loop – ADSL Qualified. Doc. No. 1999-00358-OSP (Dated July 1, 1999) These policies and procedures are distributed and explained to Verizon NJ technicians and work center personnel during training and small internal meetings to ensure that the scope and objectives are thoroughly understood. During a follow-up visit to the RCMC in Richmond, VA on December 12, 2000, KPMG Consulting observed that the documents identified are available to employees on the Verizon intranet. KPMG Consulting reviewed these documents and found that the documents define the scope and objectives of CLEC Vendor Meets.
PPR17-2	The process for requesting and scheduling Vendor Meets is operationally complete and communicated to CLECs and third-party vendors (if applicable).	Satisfied	During interviews with RCMC personnel, KPMG Consulting verified that Verizon NJ communicates Vendor Meet procedures to CLECs via industry letters. The RCMC in Richmond, VA is responsible for sending Vendor Meet requests to the Bridgewater, NJ RCMC where there is a group dedicated to ensuring Vendor Meet procedures are followed. During the documentation review phase of this

Test Reference	Evaluation Criteria	Result	Comments
			test, KPMG Consulting reviewed the Verizon document Vendor Meet Process for UNE Loops – Dispatch Out – Regional RCMC dated December 12, 2000 and confirmed that it defines responsibilities for scheduling CLEC Vendor Meets. The document states that when RSC's schedule a Vendor Meet, the information obtained from a CLEC is to include the circuit number in question, specific location for the Vendor Meet and the CLEC's available dates and times. Also Verizon NJ gives the Maintenance Service Charge warning. Verizon NJ then schedules the Vendor Meet and advises the CLEC of the scheduled meeting time. The document also states the process for the timely notification of joint meets, as well as the process for verifying pertinent information with the CLEC by the RSCs. Once verified, the following information is provided to technicians to ensure that Vendor Meet appointments are met: ◆ Time ◆ Customer premises contact name and number ◆ Customer requesting Vendor Meet contact name and number ◆ Vendor contact name and number (if applicable) ◆ Trouble reported or test results Between January 5, 2001 and January 23, 2001, KPMG Consulting observed five live Vendor Meets between Verizon and various commercial CLECs. During these observations, KPMG Consulting verified that Verizon technicians were provided with the information outlined above upon arrival to the Vendor Meet.

Test Reference	Evaluation Criteria	Result	Comments
PPR17-3	Verizon NJ M&R network technicians conduct CLEC Vendor Meets in accordance with documented methods and procedures.	Satisfied	Between January 5, 2001 and January 23, 2001, KPMG Consulting observed five live Vendor Meets between Verizon and various commercial CLECs. During these Vendor Meets, KPMG Consulting observed the following: ◆ In all instances, Verizon Network Technicians arrived at the Vendor Meet prior to the scheduled meet time. ◆ Verizon Network Technicians conducted testing activities on Verizon network circuits in accordance with the methods and procedures outlined on pages 19-20 of the Verizon Unbundled 2 Wire Digital Loop ADSL Qualified method and procedure dated July 1, 1999. ◆ In the instance in which the CLEC had not arrived at the scheduled meet time, Verizon acted in accordance with the Vendor Does Not Show procedures outlined on page 4 of the Vendor Meet Process for UNE Loops – Dispatch Out – Regional RCMC dated December 12, 2000.
PPR17-4	Vendor Meet trouble ticket closeout procedures are conducted in accordance with documented methods and procedures.	Satisfied	Between January 5, 2001 and January 23, 2001, KPMG Consulting observed five live Vendor Meets between Verizon and various commercial CLECs. KPMG Consulting reviewed the associated trouble ticket history and closeout information for each of these Vendor Meets and verified that proper disposition and cause codes (outlined in the Verizon Technicians Guide Book dated May 2000) were used and the tickets were closed in accordance with documented methods and procedures outlined in the comments for Test Reference PPR17-1 above.

D. Test Results: Network Surveillance Support Evaluation (PPR18)

1.0 Description

The Network Surveillance Support Evaluation (PPR18) was an analysis of the processes, procedures, and responsibilities associated with Verizon New Jersey's (Verizon NJ) Maintenance and Repair (M&R) network surveillance and network event notification as it relates to wholesale operations. Where applicable, KPMG Consulting examined network surveillance processes for both retail and wholesale operations to assess completeness. Additionally, the evaluation focused on the activities within the Network Services Assurance Center (NSAC) and the Network Operations Center (NOC). These centers are responsible for overseeing, monitoring, and maintenance of the Verizon NJ network.

2.0 Methodology

This section summarizes the test methodology.

2.1 Business Process Description

NSAC and NOC: Shared Responsibilities

The NSAC and NOC are jointly tasked with maintaining Verizon NJ network integrity, reliability, availability, and overall quality of service. These tasks are achieved through a combination of the following activities:

- Coordinated network monitoring and warning
- Proactive and reactive M&R
- Communications

The NSAC and NOC both monitor abnormal events that affect the service capability of the Verizon NJ network. Verizon NJ defines abnormal events as "unusual events, conditions, or situations that affect, or might be expected to affect, telephone company personnel, telephone service, equipment, or property."

The network elements for which the NOC and NSAC have surveillance and outage notification responsibilities are defined by Verizon NJ as follows:

- Interoffice Facilities (IOF) – A high capacity digital transmission path that is dedicated for the transport of local, toll, and/or access traffic between central offices. IOF can be dedicated to Verizon NJ, a CLEC or a combination of both. The CLEC can purchase IOF in DS1 through DS3 transport levels.
- IOF Dedicated Trunk Port – A dedicated high capacity termination on a Verizon NJ switch (i.e., tandem or end office) that provides signaling and transport options for moving local, toll, and/or access traffic between Verizon NJ unbundled switches or CLECs' collocated or non-collocated switches.

- Advanced Intelligent Network (AIN) – A network architecture that includes three basic call processing elements (i) Service Control Points (SCPs), (ii) Service Switching Points (SSPs), and (iii) Signal Transfer Points (STPs). An AIN SCP is a database that executes service application logic in response to queries sent to it by a SSP equipped with AIN functionality. AIN SSPs are digital phone switches that may query an SCP for customer specific instructions on how to process a call (routing, blocking, etc.). AIN STPs are packet switches that shuttle messages between an SSP and SCP or between SSP and SSP. All three communicate via out-of-band signaling using the Signaling System 7 (SS7) protocol as detailed below.
- Signal System 7 (SS7) – SS7 is a system used by network elements to exchange information over an out-of-band channel called an SS7 link. There are two distinct protocols used: (i) Integrated Services Digital Network User Part (ISUP), and (ii) Transaction Capabilities Application Part (TCAP). ISUP messaging allows an SSP to communicate with another SSP through an STP. Examples of information exchange include trunk reservation, trunk setup, and call teardown requests. SSPs may need additional information on how to route or treat a specific call request. This data may be found in an SCP. TCAP messaging allows an SSP to communicate with an SCP (or an SCP with another SCP) through an STP. Examples of information exchange include Local Number Portability related data queries and responses regarding Location Routing Numbers and Line Information Database addresses.

NOC: Comprehensive M&R Surveillance Responsibilities

The primary responsibility of the Verizon NJ NOC is the maintenance, repair, and provisioning of Verizon NJ switches and CLEC virtual switches and transport network elements. In support of these responsibilities, the NOC monitors the functionality and performance of all network elements within the Verizon NJ network. This monitoring provides the NOC with the ability to proactively and reactively coordinate their primary responsibilities. NJ NOC responsibilities are split between the Madison, NJ NOC and the Freehold, NJ NOC. The functional responsibilities between the centers are the same but are performed for different geographical regions. The state of New Jersey north of the Raritan River is the responsibility of the Madison, NJ NOC and the remaining Southern part of the state is the responsibility of the Freehold, NJ NOC.

The responsibilities of the NOC differ from those of the NSAC in that the NOC observes all elements of the network for all errors whereas the NSAC is concerned with reportable abnormal events. The difference arises from the fact that the NOC coordinates repair and service restoration activities and the NSAC's primary duty is to coordinate the communication of the occurrence of reportable network events (FCC defined). Thus, the NOC surveillance systems' alarm settings are set at lower thresholds than those of the NSAC. The following chart illustrates the NOC's major communications flows. The uni-directional and bi-directional arrows indicate who is responsible for initiating communication. WFA is the Work Force Administration system that the NOC uses to dispatch technicians.

Figure 18 - 1: NOC Interactions

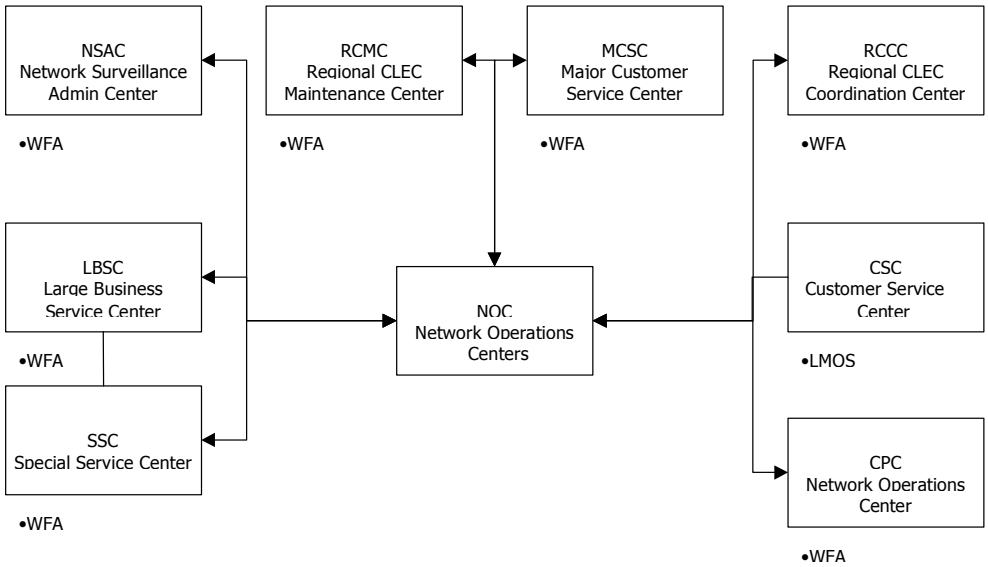

NSAC: Reportable Event Surviellence and Notification Responsibilities

The Verizon NJ NSAC is located in Newark, NJ and is responsible for monitoring the Verizon NJ network for service-affecting reportable network events, coordinating non-technical status communications during such events, and providing notification of these events to CLECs as well as Verizon NJ internal and external organizations. Thus, the level of monitoring that the NSAC performs is for more severe network events that are classified by Verizon NJ as "abnormal events". The NSAC provides information regarding these events to affected CLECs and regulatory agencies in the form of initial notification, status updates, resolution reports and after-action root cause analysis. The following chart illustrates the NSAC's major communications flows. The uni-directional and bi-directional arrows indicate who is responsible for initiating communication.

Figure 18 - 2: NSAC Interactions

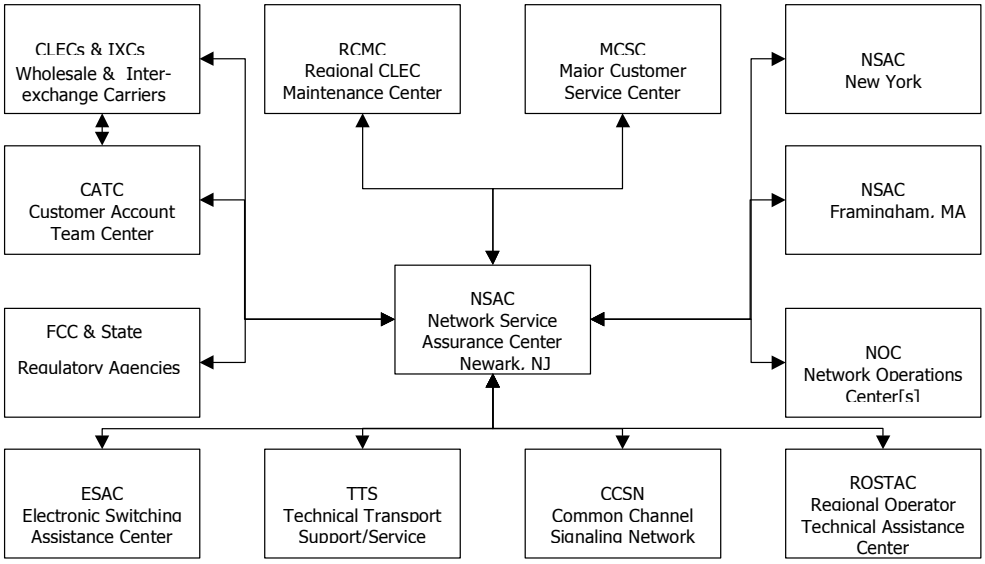

Network Surveillance Systems

The NSAC and NOC monitor and analyze the Verizon NJ network through the use of the surveillance, analysis and warning systems detailed below. All systems are online 24 hours per day and 365 days per year. Survivability of NOC and NSAC network surveillance functions is ensured by redundancy, meaning that in the event of either center going offline, the Pittsburgh, PA NOC and the remaining online NOC and/or NSAC have the ability to assume all of the offline center's surveillance duties.

- Network Traffic Manager (NSAC) – The Network Traffic Manager (NTM) system gives 30 second to five minute updates that provide the NSAC with traffic data on individual trunk groups, switch volumes, and congestion in the network. This system allows the technicians to control the availability of the network by rerouting traffic and activating "call gapping."[33]
- Network Traffic Patterns (NSAC) – The Network Traffic Patterns (NTP) system displays call irregularity messages that originate from switches. These messages provide information on occurrences of service affecting levels of network traffic, network congestion, or trunk group troubles. NTP is a passive system that provides information to the technicians. There are no network controls administered through this system. NTP also provides more detailed data on trunk groups.

[33] Call-gapping is a feature of SS7 that enables the automatic rerouting of a specified percentage of calls that are made to a specified range of addresses. During periods of network congestion, call gapping is used to reroute calls to reorder (attempt connection again) or an announcement circuit.

- Signaling Traffic Management (NSAC) – The Signaling Traffic Management (STM) system monitors flow pattern and volume of traffic data from the SS7 system. The STM analyzes this data and if certain trouble event risk thresholds are met, the system provides an electronic notification to the NSAC. This information is provided to the NSAC in real time.
- Network Monitoring and Analysis (NSAC and NOC) – The Network Monitoring and Analysis (NMA) system provides the NSAC and NOC with transport trouble alarm information. A technician can select the alarm's indicator on the NMA system's Graphical User Interface (GUI). This system capability provides additional details about the type and severity level of the trouble and identifies the affected transport facility. NMA generates alarms when transport conditions breach preset performance thresholds. The alarms are categorized by severity. These categories are Critical (outage), Major (service affecting), and Minor (non-service affecting). A Critical alarm requires immediate repair or other resolution. A Major alarm also requires immediate resolution as service to customers may be affected. A Minor alarm is non-service affecting, and can be repaired during the next safe time hours. In addition to providing alarms, NMA can be used to test network elements for localizing and diagnosing troubles. NMA also provides some repair functionality, which allows the NJ NOC to execute various remote electronic repairs. NMA also generates and submits a repair ticket to WFA when a fault is detected. NMA will issue a ticket to the "highest" entity involved in a trouble. For example, if NMA detects a trouble in two DS1 lines and both of the DS1s are sub-elements of a DS3, NMA will issue the ticket on the DS3.
- Network Fault Management (NSAC and NOC) – The Network Fault Management (NFM) system features awareness screens that provide alarm condition descriptions for switch and facility alarms. The NFM system is used for the monitoring and analysis of switches. All network switching elements deployed in the Verizon NJ network are digital. However, these switches are a combination of the 5 ESS (Lucent), DMS 100 (NorTel), and EWSD (Siemens) model switches, the majority of which are 5 ESS model switches. The NFM system receives alarms from Central Office (CO) switches and sorts the alarms based upon preset thresholds.
- The switch components for which NFM provides monitoring and alarms are switch processors, peripheral equipment, power, and miscellaneous. Switch processor modules monitored are the switching modules, communications modules, and administrative modules. Switch peripheral modules monitored consist of the line unit modules and trunk unit modules. Switch power dimensions monitored are outage, shortage, and surge.
- Alarms reported by NFM are categorized according to severity. These alarms range from most to least severe. The most severe is designated P1AB (service affecting, requires abnormal event report). This indicates a trouble that must be fixed immediately. The alarm is also reported to the NOC Single Point of Contact, (SPOC) and, if it occurs during off-hours, the closest CO technician with the appropriate training is dispatched to repair the trouble. The next level of severity is a P1 (service affecting). This indicates a trouble that Verizon NJ determines can be fixed during the next Central Office safe time opportunity. Safe time, which is between 11:00 p.m. and 7:00 a.m, are the hours of least network traffic and CO activity. Alarm conditions of P2 (potentially service affecting) and P3 (non-optimal performance but not potentially service affecting) are of lower priority and are scheduled into the workload at the most convenient time.

- Chatlos – (NOC) Chatlos is used to monitor air pressure conditions on pressurized cables. The NOC monitors these conditions from 5:00 p.m. to 8:00 a.m. on weekdays and for 24 hours during weekends and holidays. Local CO monitoring resumes at 8:00 a.m. on weekdays. A Chatlos alarm is reported when air pressure in cables reaches a predetermined low-pressure threshold. The purpose of having positive pressure on telephone cables is to prevent the entrance of water into the sheath of the cable, which may cause numerous types of cable failures if left undetected. Air pressure alarms assist in the determination of leaks and possible cable failures. When a drop in air pressure is encountered, the NOC notifies the local CO duty supervisor, who determines how to respond to the alarm.

Abnormal Event Process

The diagram below illustrates the actions and interactions between the NSAC and NOC during an abnormal event.

Figure 18 - 3: Overview of NOC/NSAC Abnormal Event Interactions

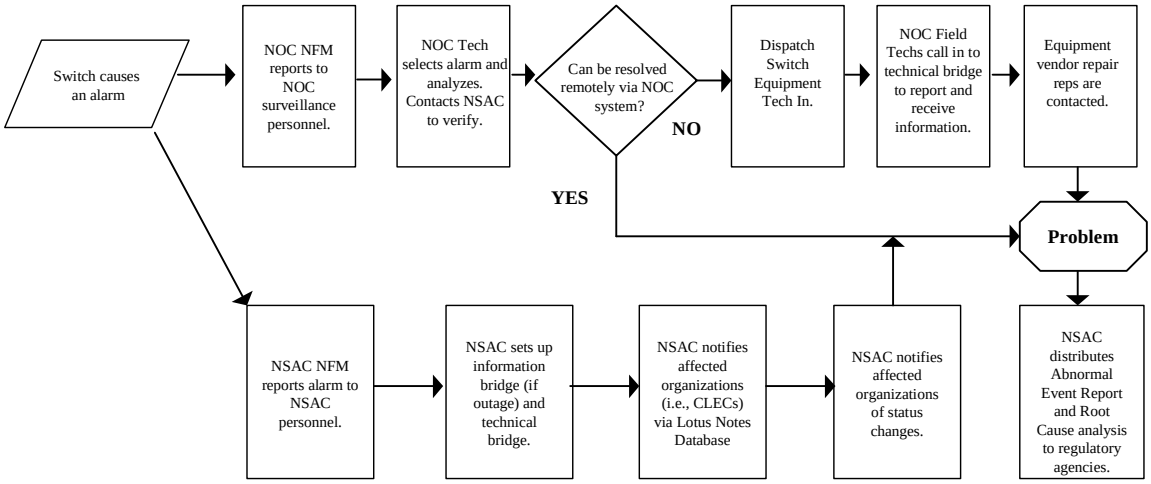

2.2 Scenarios

Scenarios were not applicable to this test.

2.3 Test Targets & Measures

The test targets are Verizon NJ's network surveillance and outage notification processes, which includes the following sub-processes:

- IOF Surveillance
- AIN Interconnect Surveillance
- SS7 Network Surveillance
- Process Documentation
- Notification Procedures

2.4 Data Sources

The data collection performed for this test included (i) interviews with and observations of Verizon NJ NOC and NSAC personnel with direct responsibility and knowledge of the targeted processes and procedures, and (ii) detailed reviews of documentation supplied by Verizon NJ at the request of the Test Manager. Primary sources of data include:

- Verizon CLEC Handbook, Volume III, Sections 8.4.6 & 8.4.7
- Verizon Practices Document: Guide to Inputting Verizon Lotus Notes Abnormal Events
- Verizon Practices Document: Restoration Practice for a Major Service Affecting Event
- Verizon Practices Document: Disaster Recovery – Central Office Restoration
- Verizon Practices Document: Reportable Abnormal Conditions
- Verizon Abnormal Event Reporting Guidelines
- FCC Guidelines Notification of Service Outage CFR, Title 47, Volume 3, Part 63, Section 63.100

2.4.1 Data Generation/Volumes

This test did not rely on data generation or volume testing.

2.5 Evaluation Methods

Verizon NJ network surveillance and outage notification procedures were reviewed and evaluated according to targets established by the Test Manager. The following provides additional detail on the testing methods used to conduct the Network Surveillance Support Evaluation:

- Interviews – KPMG Consulting conducted interviews of personnel with direct responsibility and knowledge of the targeted processes in the following Verizon NJ centers: (i) Freehold, NJ NOC, (ii) Madison, NJ NOC, and (iii) Newark, NJ NSAC.
- Observations – KPMG Consulting performed observations of the NSAC and NOC personnel coverage of the Verizon NJ network. This was done in order to identify the presence of any substantive differences between the processes practiced in the NSAC and NOC and those processes as detailed in the reviewed Verizon NJ methods and procedures documentation.
- Documentation Review – KPMG Consulting conducted a detailed review of process flow and methods and procedures documentation related to network surveillance and outage notification.

2.6 Analysis Methods

The Network Surveillance Support Evaluation (PPR18) used evaluation criteria developed by the Test Manager during the initial phase of the Verizon NJ OSS Evaluation. These evaluation criteria provided the framework of norms, standards, and guidelines for evaluating the identified test targets.

3.0 Results

This section identifies the evaluation criteria and test results.

3.1 Results Summary

The results of this test are presented in Table 18-1 below.

Table 18-1: PPR18 Evaluation Criteria and Results

Test Reference	Evaluation Criteria	Result	Comments
Network Surveillance			
PPR18-1	IOF surveillance exists and is operationally complete for CLEC IOFs that are part of Verizon NJ's network.	Satisfied	During interviews with NSAC and NOC personnel, KPMG Consulting verified that CLEC interoffice facilities (IOF) such as trunk groups and transports are monitored through the use of the Network Traffic Management (NTM), Network Monitoring and Analysis (NMA), and Network Fault Management (NFM) systems. Additionally, the same systems that are used to monitor Verizon NJ IOF are also used to monitor CLEC IOF. As part of its documentation review, KPMG Consulting reviewed the Verizon CLEC Handbook and verified that this document defines the surveillance of CLEC IOF. During visits to the Verizon NJ NSAC and NOC, KPMG Consulting observed network technicians using NTM, NMA and NFM to monitor and analyze the performance of CLEC and Verizon NJ IOF. These activities were performed in accordance with the practices defined in the Verizon CLEC Handbook.
PPR18-2	Service affecting events involving IOF are logged, categorized, and tracked and this information is made available to requesting CLECs.	Satisfied	During interviews with personnel at the Verizon NJ NSAC, KPMG Consulting verified that information regarding events affecting IOF is logged, categorized and tracked in an Abnormal Event form located within the Verizon Lotus Notes Abnormal Event database. This form is used to record initial, intermediate, restoration and resolution reports. Once an initial report is created, the same report and serial number is used for all updates. CLECs may establish a free subscription for notification of abnormal events by making a written request to their designated Verizon

Test Reference	Evaluation Criteria	Result	Comments
			NJ Account Manager. As part of its documentation review, KPMG Consulting verified that the activities and procedures for logging, categorizing, and tracking events affecting IOF are defined in the following Verizon NJ documents: ◆ Guide to Inputting Verizon Lotus Notes Abnormal Events ◆ Verizon Reportable Abnormal Conditions ◆ Verizon Abnormal Event Reporting Guidelines ◆ Verizon CLEC Handbook, Volume III, Section 8.3.7 Additionally, KPMG Consulting reviewed these documents and found that they defined the procedures for notifying CLECs of IOF events that may affect their customer service. During a visit to the Verizon NJ NSAC, KPMG Consulting observed Network Technicians logging and tracking categorized information regarding IOF events. These activities were performed in accordance with the practices defined in the documents noted above.
PPR18-3	AIN interconnection surveillance exists and is operationally complete for Verizon NJ AIN interconnections that service CLECs.	Satisfied	During interviews with NSAC and NOC personnel, KPMG Consulting verified that CLEC AIN connectivity is monitored by the use of the NMA and NFM systems. Additionally, the same systems that are used to monitor Verizon NJ AIN connectivity are also used to monitor CLEC AIN connectivity. As part of its documentation review, KPMG Consulting reviewed the Verizon CLEC Handbook and confirmed that this document defines the surveillance of AIN network elements that service CLECs. During visits to the Verizon NJ NSAC and NOC, KPMG Consulting observed network technicians using NMA and NFM to monitor and analyze the performance of CLEC and Verizon NJ AIN network elements.
PPR18-4	Service affecting events involving AIN interconnection are logged, categorized, and tracked and this information is made available to requesting CLECs.	Satisfied	During interviews with personnel at the Verizon NJ NSAC, KPMG Consulting verified that information regarding events affecting CLEC AIN is logged, categorized and tracked in an Abnormal Event form located within the Verizon Lotus Notes Abnormal Event database. This form is used to record initial, intermediate, restoration and resolution reports. Once an initial report has been created, the same report and serial number is used for all updates. CLECs may establish a free subscription for notification of abnormal events by making a written request of their

Test Reference	Evaluation Criteria	Result	Comments
			designated Verizon NJ Account Manager. As part of its documentation review, KPMG Consulting verified that the activities and procedures for logging, categorizing, and tracking events affecting AIN are defined in the following Verizon NJ documents: ◆ Guide to Inputting Verizon Lotus Notes Abnormal Events ◆ Verizon Reportable Abnormal Conditions ◆ Verizon Abnormal Event Reporting Guidelines ◆ Verizon CLEC Handbook, Volume III, Section 8.3.7 Additionally, KPMG Consulting reviewed these documents and found that they defined the procedures for notifying CLECs of IOF events that may affect their customer service. During a visit to the Verizon NJ NSAC, KPMG Consulting observed Network Technicians logging and tracking categorized information regarding AIN events. These activities were performed in accordance with the practices defined in the documentation noted above.
PPR18-5	SS7 network surveillance exists and is operationally complete for CLEC SS7 interconnections that are part of Verizon NJ's network.	Satisfied	During interviews with NSAC and NOC personnel, KPMG Consulting verified that CLEC SS7 connectivity is monitored by the use of the STM, NMA and NFM systems. Additionally, the same systems that are used to monitor Verizon NJ SS7 connectivity are also used to monitor CLEC SS7 connectivity. As part of its documentation review, KPMG Consulting reviewed the Verizon CLEC Handbook and confirmed that this document defines the surveillance of CLEC SS7. During visits to the Verizon NJ NSAC and NOC, KPMG Consulting observed network technicians using STM, NMA and NFM to monitor and analyze the performance of CLEC and Verizon NJ SS7. These activities were performed in accordance with the practices defined in the document noted above.
PPR18-6	Service affecting events involving the SS7 network are logged, categorized, and tracked and this information is made available to requesting CLECs.	Satisfied	During interviews with personnel at the Verizon NJ NSAC, KPMG Consulting verified that information regarding events affecting the SS7 network is logged, categorized and tracked in an Abnormal Event form located within the Verizon Lotus Notes Abnormal Event database. This form is used to record initial, intermediate, restoration and resolution reports. Once an initial report is created, the same report and serial number is used for all updates. CLECs may establish a

Test Reference	Evaluation Criteria	Result	Comments
			free subscription for notification of abnormal events by making a written request to their designated Verizon NJ Account Manager. As part of its documentation review, KPMG Consulting verified that the activities and procedures for logging, categorizing, and tracking events affecting the SS7 network are defined in the following Verizon NJ documents: ◆ Guide to Inputting Verizon Lotus Notes Abnormal Events ◆ Verizon Reportable Abnormal Conditions ◆ Verizon Abnormal Event Reporting Guidelines ◆ Verizon CLEC Handbook, Volume III, Section 8.3.7 Additionally, KPMG Consulting reviewed these documents and found that they define the procedures for notifying CLECs of IOF events that may affect their customer service. During visits to the Verizon NJ NSAC, KPMG Consulting observed Network Technicians logging and tracking categorized information regarding SS7 network events according to the methods and procedures outlined in the documentation noted above.
PPR18-7	Major service affecting events involving network elements that service CLECs are logged, categorized, and tracked and made available to affected CLECs.	Satisfied	Verizon NJ defines Major Service Affecting Events as any network event meeting the following criteria: ◆ Switch failure affecting 5,000 or more lines for more than 15 minutes. ◆ Central Office SS7 Isolation affecting 5,000 or more lines for more than 15 minutes. ◆ Transport outage of greater than or equal to 8 DS3 systems for more than 30 minutes. ◆ Power Outage - CO Equipment on CO Batteries greater than or equal to 30 minutes. During interviews with personnel at the Verizon NJ NSAC, KPMG Consulting verified that information regarding major service affecting events is logged, categorized and tracked in an Abnormal Event form located within a Lotus Notes database. As part of its documentation review, KPMG Consulting reviewed the Verizon NJ documentation listed below and confirmed that this documentation defines the procedures for logging, categorizing, tracking and notifying CLECs of major network element trouble events: ◆ Restoration Practice for a Major Service Affecting Event

Test Reference	Evaluation Criteria	Result	Comments
			◆ Guide to Inputting Verizon Lotus Notes Abnormal Events ◆ Verizon Reportable Abnormal Conditions ◆ Verizon Abnormal Event Reporting Guidelines Because it is not feasible for KPMG Consulting to be present at the Verizon NJ NSAC during an actual major service affecting event, KPMG Consulting observed Network Technicians using training mode to log and track categorized information regarding major service affecting events. This information was logged on abnormal event data forms in the Verizon Lotus Notes Abnormal Event database. These activities were performed in accordance with the methods and procedures outlined in the documentation noted above.
Network Event Notification			
PPR18-8	An operationally complete policy and procedure is in place for notifying affected CLECs of a network outage.	Satisfied	During interviews with personnel at the Verizon NJ NSAC, KPMG Consulting verified that notification to CLECs potentially impacted by a network outage is identical to procedures for network outage notification. A Lotus Notes Abnormal Event database contains contact information for CLECs who made a request through their Account Manger to receive the network outage notification list. These CLECs are notified via telephone, facsimile or email. The activities, policy and procedures for notifying CLECs of network outages are defined in the following Verizon NJ documents: ◆ Restoration Practice for a Major Service Affecting Event ◆ Guide to Inputting Verizon Lotus Notes Abnormal Events ◆ Verizon Reportable Abnormal Conditions ◆ Verizon Abnormal Event Reporting ◆ Verizon CLEC Handbook, Volume III, Section 8.3.7 KPMG Consulting reviewed this documentation and verified that the documentation defines the policy and procedure for notifying CLECs of network outages. More specifically, KPMG Consulting confirmed that the documentation: ◆ Defines reporting responsibilities, reportable conditions, and when and whom to notify in Verizon NJ organizations. ◆ Defines specific notification requirements for the NOC in its Tier I surveillance role and the NSAC in its Tier II role.

Test Reference	Evaluation Criteria	Result	Comments
			◆ Defines outage notification time triggers and the process for CLECs to establish outage notification. ◆ Is consistent with Federal Communications Commission Guidelines as set forth in the Code of Federal Regulations, Title 47, Volume 3, Part 63, Section 63.100, Notification of Service Outage. Because it is not feasible for KPMG Consulting to be present at the Verizon NJ NSAC during an actual major service affecting event, KPMG Consulting observed Network Technicians using training mode to log and track categorized information regarding major service affecting events. This information was logged on abnormal event data forms in the Verizon Lotus Notes Abnormal Event database. These activities were performed in accordance with the methods and procedures outlined in the documentation noted above.
PPR18-9	Operationally complete procedures exist for major service affecting event notification.	Satisfied	During interviews with personnel at the Verizon NJ NSAC, KPMG Consulting verified that the procedures for major service affecting event notification are identical to procedures for network outage notification. A Lotus Notes Abnormal Event database contains contact information for CLECs who made a request through their Account Manger to receive the major service affecting event notification list. Notification to CLECs potentially impacted by a major service-affecting event is executed via telephone, facsimile and emails from the Lotus Notes Abnormal Event database. The activities, policy and procedures for notifying CLECs of major service affecting events are defined in the following Verizon NJ documentation: ◆ Restoration Practice for a Major Service Affecting Event ◆ Guide to Inputting Verizon Lotus Notes Abnormal Events ◆ Verizon Reportable Abnormal Conditions ◆ Verizon Abnormal Event Reporting Guidelines ◆ CLEC Handbook, Volume III, Section 8.3.7. KPMG Consulting reviewed this documentation and verified that the documentation defines the policy and procedure for notifying CLECs of major service affecting events. More specifically, KPMG Consulting confirmed that the documentation: ◆ Defines reporting responsibilities, reportable conditions, and when and whom to notify in Verizon NJ organizations. ◆ Defines specific notification requirements for the NOC in its Tier I surveillance role and the NSAC

Test Reference	Evaluation Criteria	Result	Comments
			in its Tier II role. ◆ Defines major service affecting event notification time triggers and the process for CLECs to establish event notification. ◆ Is consistent with Federal Communications Commission Guidelines as set forth in the Code of Federal Regulations, Title 47, Volume 3, Part 63, Section 63.100, Notification of Service Outage. Because it is not feasible for KPMG Consulting to be present at the Verizon NJ NSAC during an actual major service-affecting event, KPMG Consulting observed Network Technicians using training mode to send Lotus Notes email, telephone and facsimile notifications of major service affecting events to a CLEC. These activities were performed in accordance with the practices defined in the documents noted above.

E. Test Results: M&R RETAS Functional Evaluation (TVV5)

1.0 Description

The Maintenance and Repair (M&R) Repair Trouble Administration System (RETAS) Functional Evaluation (TVV5) validated the capability of Verizon New Jersey (Verizon NJ) trouble administration system available to Competitive Local Exchange Carriers (CLECs) to perform as documented in the RETAS Student Guides, CLEC handbooks and other applicable documents. As part of this evaluation, the general usability of both the RETAS web interface and the RETAS Student Guides were considered. In addition, a review was performed of Verizon NJ's ability to execute trouble ticket create functions, both manually and via RETAS, on newly migrated services within 24 hours of the service order due date.

Verizon NJ's RETAS is a front-end tool that allows CLECs and Resellers to interface with Verizon NJ's backend M&R systems. CLECs and Resellers use RETAS to both manage instances of trouble with a line or service and also to enter M&R service requests. Requests are entered into RETAS using a web-based graphical user interface (GUI). The current RETAS application is accessible from the Verizon Web GUI – Phase III.

2.0 Methodology

This section summarizes the test methodology.

2.1 Business Process Description

RETAS provides CLECs and Resellers access to Verizon's backend M&R systems as illustrated in Figure 5-1:

Figure 5-1: Verizon- NJ Trouble Administration Systems Used by CLECs [34]

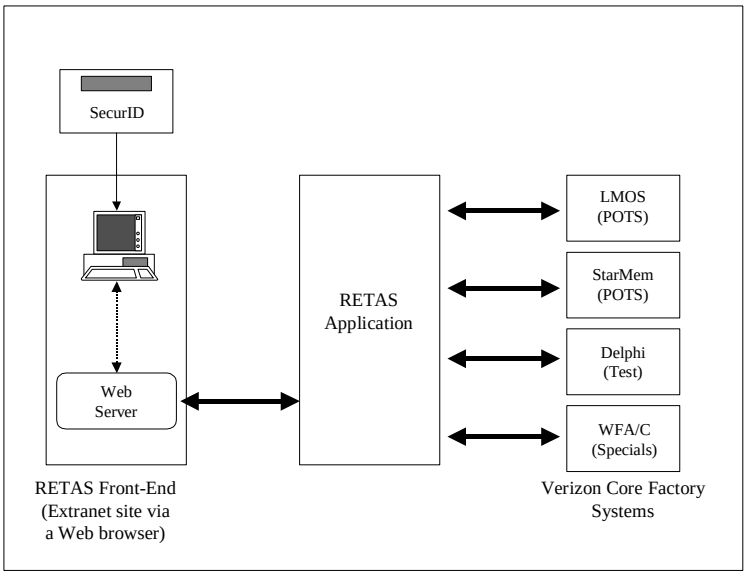

[34] In general, Specials are maintained in WFA/C and POTS is maintained in LMOS. However, basic UNE-Loops, which are considered POTS, are an exception as they are maintained in WFA/C for trouble administration.

For the purposes of M&R activity, Verizon's backend comprises a set of systems that support the following three categories of activity:

- Trouble administration systems for plain old telephone service (POTS),
- Trouble administration systems for special circuits (Specials), and
- Test systems for fault identification for Resale and Unbundled Network Elements-Platform (UNE-P).

In Verizon NJ terminology, for the purpose of trouble entry, integrated services digital network (ISDN), Centrex, private branch exchange (PBX), unbundled network element–switch (UNE-Port), and local number portability (LNP) are considered POTS for maintenance purposes. UNE-Loops, inter-office facilities (IOF), high capacity circuits, private lines and unbundled signaling system #7 (SS7) are considered Specials.

POTS-related trouble administration activities are processed through the Loop Maintenance Operating System (LMOS) and the StarMem system. LMOS provides overall maintenance, tracking and dispatch functionality. StarMem is a specialized application that allows automatic feature updates to switches. Switches are updated when a feature (e.g., call waiting, call forwarding, etc.) paid for by the end user customer is not active. For Specials trouble administration activities, the Work Force Administration/Control system (WFA/C) is the counterpart application to LMOS.

The internal security of RETAS requires ownership validation before transactions can be performed against a circuit number. For newly provisioned lines, RETAS provides the option of adding new service order information, which enables the system to access the new service order information in order to validate ownership and allow the creation of trouble tickets on that account prior to the establishment of the updated LMOS line record.

The Delphi system provides connectivity to Verizon NJ test systems. In the case of POTS circuits, the Delphi system routes the test request to the Mechanized Loop Test (MLT) system. In the case of Specials circuits, the Delphi system routes the test request to the Hekimian test system, which performs an analysis on special circuits such as multi-point private line circuits.

Table 5-1: Verizon NJ Backend Systems

Circuit Type	M&R Activity	Verizon NJ Backend System
POTS: Resale, ISDN, PBX, Centrex, UNE-Platform, UNE-Port, INP, LNP	Trouble administration	LMOS/StarMem
	Test	Delphi, MLT
Specials: Complex UNE, UNE-Loop, IOF, Unbundled SS7, High Capacity Circuits, Private Lines	Trouble administration	WFA/C
	Test (Designed Circuits only)	Delphi, Hekimian

CLECs and Resellers access RETAS through the web-based GUI. The GUI presents screens for entering the following types of M&R transactions:

- Mechanized loop test
- Hekimian test
- Create trouble ticket
- Create trouble ticket using new service order ID
- Modify trouble ticket
- Status Inquiry
- Close trouble ticket
- Service recovery
- Trouble ticket history
- Trouble ticket extended history

The main RETAS application is a routing tool that accepts trouble administration messages, routes requests to the appropriate Verizon backend systems for processing and returns electronic responses. While RETAS manages the transactional aspect of M&R by steering troubles to the backend systems, it does not perform any of the physical maintenance and repair functions. These functions are administered by the backend systems. Since Verizon NJ's CLEC and Reseller customers share RETAS, Verizon NJ has implemented several layers of security to prevent unauthorized use and preserve data confidentiality. At the customer level, RETAS limits access to persons with a valid user ID and password. An additional level of security validates each RETAS transaction.

Figure 5-2 highlights the functional components of RETAS:

Figure 5-2: RETAS Architecture[35]

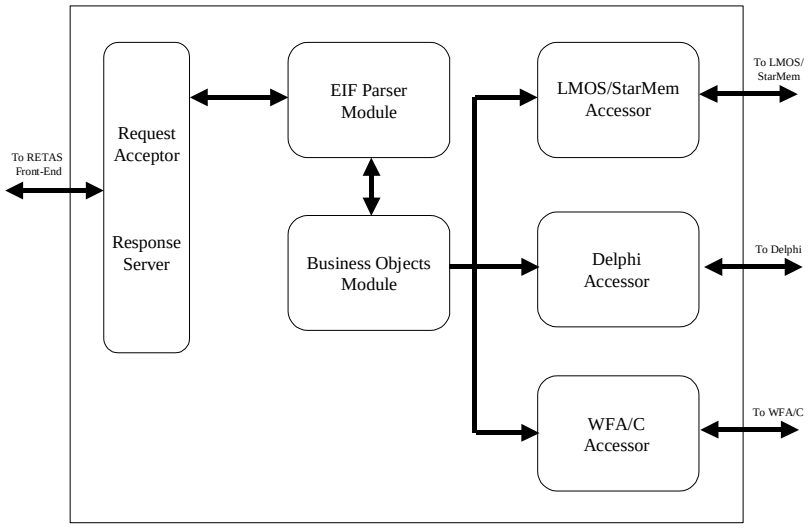

[35] The source for this information is the Verizon NJ, RETAS Business Events Flow, Version I

Trouble administration messages enter RETAS via the Request Acceptor module. The electronic interface (EIF) parser performs field-level validation by checking for the presence of required/conditional inputs and ensures that data was provided in the correct format. The business objects module contains the routing intelligence needed to interact with Verizon NJ backend systems via the three accessor modules (LMOS/StarMem, Delphi and WFA/C).

RETAS interacts with Verizon NJ backend systems in a two step process: a security/validation procedure followed by the submission of data. In the security/validation step, the user's right to access the circuit is verified, and, if needed, the existence of a previously reported trouble is checked.

The RETAS Student Guides for CLECs and Resellers are provided to individuals who attend Verizon NJ Wholesale Services RETAS training and education courses. Verizon NJ offers a three-day training class for CLECs and a two-day training class for Resellers.

2.2 Scenarios

Scenarios were not applicable to this test, however, RETAS transactions were conducted for a variety of line types. Table 5-2 below summarizes the transaction mix for the line types used for the test.

Table 5-2: Transaction Mix

Line Type	Create	Modify	Close	Status Inquiry	History	Ext. History	MLT	Hekimian	Service Recovery
Resale POTS	X	X	X	X	X	X	X		X
UNE-Platform	X	X	X	X	X	X	X		X
UNE-Loop	X	X	X	X	X	X			
Private Line	X	X	X	X	X	X		X	
DS1	X	X	X	X	X	X			
EEL	X	X	X	X	X	X			
PBX	X	X	X	X	X	X			

2.3 Test Targets & Measures

The test target was the accessibility and functionality of the RETAS M&R GUI, which included reviews of the following processes and sub-processes:

- Trouble Reporting
  - Create and Enter Trouble Report (TR)
  - Modify TR
  - Close TR
  - Retrieve TR Status

- Trouble Reporting on Newly Migrated Service
  - Create and Enter TR
  - Close TR
- Trouble History Access
  - Retrieve Trouble History
  - Retrieve Extended Trouble History
- Access to Test Capability
  - Initiate MLT Test
  - Receive MLT Test Results
  - Initiate Hekimian Test
  - Receive Hekimian Test Results
- Line Treatment Capability
  - Create Service Recovery Request

2.4 Data Sources

The sources of data for this test included reviews of RETAS Student Guides and CLEC handbooks.

2.4.1 Data Generation/Volumes

This test did not rely on data generation or volume testing.

2.5 Evaluation Methods

The following ten functions available in RETAS were used in the M&R RETAS Functional Evaluation (TVV5):

- Mechanized loop test
- Hekimian test
- Create trouble ticket
- Create trouble ticket using new service order ID
- Modify trouble ticket
- Status inquiry
- Close trouble ticket
- Service recovery
- Trouble ticket history
- Trouble ticket extended history

The test consisted of the following steps:

1). The RETAS Student Guides were reviewed to understand how each functional request is processed using RETAS.

2). Test scripts for each RETAS transaction were designed. As part of this process, the KPMG Consulting M&R RETAS Functional Analysis (TVV5) team gave consideration to testing the completeness, ease of use and clarity of the RETAS Student Guides.

3). The test scripts from Step 2 were entered into RETAS and submitted. System responses were collected. RETAS transaction requests and responses were documented and screen prints maintained for each transaction request and response. Error responses were analyzed to determine underlying causes such as unclear documentation, RETAS functional deficiency, or user error (e.g., data entry mistakes, etc.). Transactions with user errors were corrected and resubmitted.

4). During the data-entry process outlined in Step 3, edit rules for required, conditional, and optional fields were validated. These fields were tested to ensure that they were required and that invalid entries were flagged correctly.

5). Because the manual reporting of troubles is documented as the back-up process to electronically entering troubles, test scripts for additional manual trouble reporting transactions to be called into the Regional CLEC Maintenance Center (RCMC) were designed. As part of this process, the KPMG Consulting team gave consideration to testing the completeness, ease of use and clarity of the documentation available to CLECs and Resellers.

6). KPMG Consulting attempted to open tickets on newly migrated lines manually within 24 hours of the service order due date. This necessitated a call into the RCMC that handles wholesale trouble reports.[36] Service Order ID information was provided as necessary. All requests and subsequent responses were documented.

7). Following the review of RETAS functions in Step 3 and the RCMC role in Step 5, the KPMG Consulting test team closed trouble tickets.

RETAS was also employed during the M&R RETAS Performance Evaluation (TVV6) and End-to-End Trouble Report Processing Test (TVV7). Observations made during these tests were incorporated into the TVV5 test.

2.6 Analysis Methods

The M&R RETAS Functional Evaluation (TVV5) included a checklist of evaluation criteria developed by the Test Manager during the initial phase of the Verizon NJ OSS Evaluation. These evaluation criteria provided the framework of norms, standards, and guidelines for the M&R RETAS Functional Evaluation (TVV5).

The data collected were analyzed employing the evaluation criteria referenced in Section 3.1 below.

3.0 Results

This section identifies the evaluation criteria and test results.

3.1 Results Summary

[36] The Provisioning Completion Message (PCM) signifies the end of the provisioning process. Prior to the receipt of the PCM, any trouble report is considered by Verizon NJ a provisioning issue and should be reported to the Retail Service Center (RRSC); KPMG Consulting did not test this process. Attempts to report troubles to the RCMC prior to the receipt of the PCM were, however, successful in certain instances.

KPMG Consulting submitted a total of 564 M&R transactions using RETAS. Four additional trouble reporting transactions were called into the RCMC. The results of this test are presented in Tables 5-3 below.

Table 5-3: TVV5 Evaluation Criteria and Results

Test Reference	Evaluation Criteria	Result	Comments
TVV5-1	The user is able to enter a trouble report on an established account using RETAS and receive a satisfactory response.	Satisfied	Following the steps outlined in the RETAS Student User Guide, RETAS was used to process 98 create requests and 100% (98) satisfactory responses were received.
TVV5-2	The user is able to modify a trouble report using RETAS and receive a satisfactory response.	Satisfied	Following the steps outlined in the RETAS Student User Guide, RETAS was used to modify 30 trouble reports and 100% (30) satisfactory responses were received.
TVV5-3	The user is able to close a trouble report using RETAS and receive a satisfactory response.	Satisfied	Following the steps outlined in the RETAS Student User Guide, RETAS was used to close 34 trouble tickets and 100% (34) satisfactory responses were received.
TVV5-4	The user is able to check the status of a trouble report using RETAS and receive a satisfactory response.	Satisfied	Following the steps outlined in the RETAS Student User Guide, RETAS was used to retrieve the status of 26 trouble tickets and 100% (26) satisfactory responses were received.
TVV5-5	The user is able to access historical trouble information using RETAS and receive a satisfactory response.	Satisfied	Following the steps outlined in the RETAS Student User Guide, RETAS was used to retrieve 181[37] trouble ticket histories and 100% (181[37]) satisfactory responses were received.
TVV5-6	The user is able to access extended historical trouble information using RETAS and receive a satisfactory response.	Satisfied	Following the steps outlined in the RETAS Student User Guide, RETAS was used to request 40 extended trouble histories and 100% (40) satisfactory responses were received.
TVV5-7	The user is able to initiate and conduct a Mechanized Loop Test (MLT) using RETAS.	Satisfied	Following the steps outlined in the RETAS Student User Guide, RETAS was used to initiate and conduct 45 MLT tests and 100% (45) transactions were completed.

[37] This total includes histories pulled for tickets opened within 24 hours of the service order date on newly migrated Resale, UNE-P, and UNE-L lines.

Test Reference	Evaluation Criteria	Result	Comments
TVV5-8	The user is able to receive MLT results using RETAS.	Satisfied	Following the steps outlined in the RETAS Student User Guide, 45 MLTs were conducted and 100% (45) satisfactory responses were received through RETAS. The responses indicated both test results and recommendations for remediation.
TVV5-9	The user is able to initiate and conduct a Hekimian test using RETAS.	Satisfied	Following the steps outlined in the RETAS Student User Guide, RETAS was used to initiate and conduct 14 Hekimian tests and 100% (14) responses were successfully received.
TVV5-10	The user is able to conduct a Hekimian test using RETAS and receive a satisfactory response.	Satisfied	Following the steps outlined in the RETAS Student User Guide, 14 Hekimian tests were conducted and 100% (14) satisfactory responses were received through RETAS. The responses indicated both test results and recommendations for remediation.
TVV5-11	The user is able to implement Service Recovery using RETAS and receive a satisfactory response.	Satisfied	Following the steps outlined in the RETAS Student User Guide, RETAS was used to implement five[38] service recoveries and 100% (five) satisfactory responses were received. The service recovery function is available when the trouble is in either a Pending Dispatch, or Dispatched Out state.

[38] ***Verizon-NJ informed the Test Manager that the Service Recovery function was available on Nortel DMS-100 or Lucent 5-ESS switches, but not supported on EWSD (Siemens) switches. This limited the number of Service Recovery transactions conducted during the test.***

Test Reference	Evaluation Criteria	Result	Comments
TVV5-12	The user is able to enter a Resale trouble report using RETAS within 24 hours of the service order due date and receive a satisfactory response.	Satisfied	Following the steps outlined in the RETAS Student User Guide, RETAS was used to process 33 create requests and 100% (33) satisfactory responses were received. KPMG Consulting used a benchmark of 95%. Twenty-seven test cases provided satisfactory responses before midnight on the service order due date. Six additional satisfactory responses were obtained before noon on the day following the service order due date.
TVV5-13	The user is able to enter a Resale trouble report manually through a phone call to the RCMC immediately following receipt of the provisioning completion message and obtain a satisfactory response.[39]	Satisfied	Following the steps outlined in the RETAS Student User Guide, RETAS was used to process 22 create requests and 100% (22) satisfactory responses were received. KPMG Consulting used a benchmark of 95%. Seventeen test cases provided satisfactory responses before midnight on the service order due date. Five additional satisfactory responses were obtained before noon on the day following the service order due date.
TVV5-14	The user is able to enter a UNE-P trouble report using RETAS within 24 hours of the service order due date and receive a satisfactory response.	Satisfied	Following the steps outlined in the RETAS Student User Guide, RETAS was used to process 25 create requests and 100% (25) satisfactory responses were received. KPMG Consulting used a benchmark of 95%. Nine test cases provided satisfactory responses before midnight on the service order due date. Sixteen additional satisfactory responses were obtained before noon on the day following the service order due date.

[39] See note 3 *supra*.

Test Reference	Evaluation Criteria	Result	Comments
TVV5-15	The user is able to enter a UNE-P trouble report manually through a phone call to the RCMC immediately after the receipt of the provisioning completion message and obtain a satisfactory response.[40]	Satisfied	Following the steps outlined in the RETAS Student User Guide, RETAS was used to process 25 create requests and 100% (25) satisfactory responses were received. KPMG Consulting used a benchmark of 95%. Twenty-two test cases provided satisfactory responses before midnight on the service order due date. Three additional satisfactory responses were obtained before noon on the day following the service order due date.
TVV5-16	The user is able to enter a trouble report within 24 hours of an Unbundled Loop migration using RETAS and receive a satisfactory response.	Satisfied	Following the steps outlined in the RETAS Student User Guide, RETAS was used to process 33 create requests and 100% (33) satisfactory responses were received. KPMG Consulting used a benchmark of 95%. 100% of the 33 test cases provided satisfactory responses before midnight on the service order due date.
TVV5-17	The user is able to enter a trouble report for an Unbundled Loop manually through a phone call to the RCMC immediately after the receipt of the provisioning completion message and obtain a satisfactory response.[41]	Satisfied	Following the steps outlined in the RETAS Student User Guide, RETAS was used to process 26 create requests and 100% (26) satisfactory responses were received. KPMG Consulting used a benchmark of 95%. 100% of the 26 test cases provided satisfactory responses before midnight on the service order due date.

[40] *Ibid*.
[41] See note 3 *supra*.

F. Test Results: M&R RETAS Performance Evaluation (TVV6)

1.0 Description

The Maintenance and Repair (M&R) Repair Trouble Administration System (RETAS) Performance Evaluation (TVV6) was a transaction driven test designed to evaluate the behavior of the Verizon New Jersey (Verizon NJ) trouble administration system and its interfaces under load conditions. The objective of this evaluation was to test the responsiveness of the Verizon NJ trouble administration system developed for Competitive Local Exchange Carriers (CLECs) during normal hour, peak hour and stress load conditions.

The M&R RETAS Performance Evaluation (TVV6) was conducted in three phases. In Phase I, RETAS responsiveness was measured for normal hour load. In Phases II and III, RETAS responsiveness was measured for peak and stress loads. Phase I used transaction sets established to simulate projected December 2001 volumes for normal day operations. Phase II and III simulated progressively more aggressive volume forecasts than Phase I.

2.0 Methodology

This section summarizes the test methodology.

2.1 Business Process Description

For a description of the RETAS Business Process, refer to M&R RETAS Functional Evaluation (TVV5), Section 2.1.

2.2 Scenarios

Scenarios are not applicable to the M&R RETAS Performance Evaluation (TVV6); however the transaction sets included a mix of the following M&R transactions types consistent with current system usage. [42]

- Perform mechanized loop test
- Perform Hekimian test
- Create trouble ticket [43]
- Modify trouble ticket
- Request trouble ticket status
- Close trouble ticket
- Request trouble ticket history
- Request trouble ticket extended history

[42] Successful Service Recovery transactions require trouble tickets in a Dispatch Out (DO) state. Since the dispatching of technicians was avoided during the RETAS performance evaluation, the Service Recovery function was not included in the transaction mix for the volume test.

[43] A special Override Handle Code (OHC) was used for all *create* transactions. The OHC is an optional field in the Trouble Create screen of Verizon's GUI Phase III that is used as a mechanism to prevent Verizon-NJ technicians from being dispatched on these troubles.

2.3 Test Targets & Measures

The test target was system response times of RETAS that provides CLECs access to Verizon's core factory M&R systems. Included in the evaluation were the following process and sub-processes:

- Performance
  - Projected Normal Loads
  - Projected Stress Loads

2.4 Data Sources

Data used to support the test consisted of historical maintenance data and line growth projections supplied by Verizon NJ in addition to the RETAS Users Guide and CLEC Handbooks.

2.4.1 Data Generation/Volumes

The baseline volume for each test day consisted of the sum of 11 normal hours and one peak hour. The volume for a stress hour is defined as 2.4 times a normal hour. Table 6-1 summarizes the different load conditions tested.

Table 6-1: RETAS Load Conditions

Load Condition	Definition for TVV6
Normal hour load	Forecasted load based on December 2001 normal hour
Peak hour load	Load defined as 1.5 X December 2001 normal hour
Stress hour load	Load defined as 2.4 X December 2001 normal hour

2.4.2 December 2001 Normal Hour Load Calculation

The M&R RETAS Performance Evaluation (TVV6) test was executed in October 2000. In an effort to keep results current, the test was conducted using forecasted volumes for December 2001. The forecasted December 2001 installed base of wholesale plain old telephone service (POTS) and Specials circuits was based on estimates received from Verizon NJ, as shown in Table 6-2 below.

Table 6-2: Projected December 2001 Installed Base

	NJ [44]	Verizon [45]
POTS [46]	269K lines	3,393K lines
Specials [47]	78K lines	619K lines
Total	347K lines	4,012K lines

Based on the average 1.0% monthly RETAS trouble rate reported by Verizon, POTS circuits in New Jersey will generate 2.69K (269K multiplied by .01) reports per month and Specials circuits in New Jersey will generate 0.78K (78K multiplied by .01) reports per month. Assuming that 90% of trouble reports occur during the 22 weekdays in an average month, the calculated number of daily trouble reports is 110 ((2.69K multiplied by .9) divided by 22) for POTS and 32 ((0.78K multiplied by 9) divided by 22) for Specials.

Over a 12-hour day, which consists of 11 normal hours plus one peak hour (1.5 normal hours), the calculated normal hour trouble report rate is 9 per hour (110 divided by 12.5) for POTS and 3 per hour (32 divided by 12.5) for Specials, as shown in Table 6-3 below.

Table 6-3: December 2001 Normal Trouble Report Rate (Per Hour)

	NJ	**Verizon**
POTS	9	111
Specials	3	20
Total	12	131

Verizon NJ's M&R transaction data for December 1999 through July 2000 indicates that *create trouble tickets* account for 19.3% of all transactions. Each create transaction generates 4.18 other transactions. Similar statistics for Specials are unavailable due to a low level of M&R activity. Therefore, the Test Manager used the same transaction mix for both POTS and Specials testing. Table 6-4 illustrates the transaction mix, using the ratios derived from the Verizon NJ transactions and the total Verizon transactions reported.

[44] Bell Atlantic-New Jersey Telecom Industry Services Comprehensive Demand Forecast: 1998-2003 ("NJ" worksheet from Verizon line count info.xls).
[45] Total Bell Atlantic Telecom Industry Services Comprehensive Demand Forecast: 1998-2003 ("Total Bell Atlantic" worksheet from Verizon line count info.xls).
[46] From the above Demand Forecast: Total resale lines plus total combinations and UNE Platform forecasts for December 31, 2001.
[47] From the above Demand Forecast: Total unbundled loops and resale specials forecast for December 31, 2001.

Table 6-4: M&R Transaction Mix

	RETAS Activity: NJ		RETAS Activity: Verizon	
	% of Total	Ratio of Transaction to Create Transaction	% of Total	Ratio of Transaction to Create Transaction
Test	61.5%	3.19	48.8%	2.24
Create	19.3%	1.00	21.7%	1.00
Modify	0.1%	0.003	0.1%	0.002
Close	0.6%	0.03	0.4%	0.02
History	13.1%	0.68	25.3%	1.2
Status	5.4%	0.28	3.7%	0.17
Total	100.0%	5.183	100.0%	4.632

Applying the ratios in Table 6-4: M&R Transaction Mix to the trouble report numbers developed in Table 6-3: December 2001 Normal (per hour) Trouble Report Rate yields Table 6-5, which follows.

Table 6-5: Calculated December 2001 Normal Hour Load (Per Hour)

	RETAS Activity: NJ		RETAS Activity: Verizon	
	POTS	Specials	POTS	Specials
Test	29	9	249	49
Create	9	3	111	20
Modify	0	0	0	0
Close	0	0	2	0
History	6	2	133	24
X History [48]	6	2	133	24
Status	3	1	19	3
Total	53	17	647	120

Since the percentage of modify and close transactions are close to zero, the calculated number of transactions was less than one per hour. An adjustment was made to include a minimum of one modify and one close transaction which were submitted each hour. Table 6-6 includes these adjustments.

[48] The Test Manager used the assumption that the number of requests for History and Extended History are the same. The data provided by Verizon did not include separate transaction counts for Extended History.

Table 6-6: December 2001 Normal Hour Load (Per Hour)

	RETAS Activity: NJ		RETAS Activity: Verizon	
	POTS	**Specials**	**POTS**	**Specials**
Test	29	9	249	49
Create	9	3	111	20
Modify	1	1	1	1
Close	1	1	2	1
History	6	2	133	24
X History	6	2	133	24
Status	3	1	19	3
Total	55	19	648	122

2.5 Evaluation Methods

An automated scripting tool (see Section 2.5.1) was used to submit transactions to RETAS at a pre-determined rate. Consequently, RETAS was evaluated on the basis of performance under varying load conditions (see Table 6-1).

2.5.1 RETAS Front-end and Automated Scripting Tool

CLECs can access RETAS through a web-based graphical user interface (GUI). The web interface contains screens for entering each type of M&R transaction.

A scripting tool was used to accommodate the high transaction rate required for the RETAS performance test. Interaction with the GUI interface was automated using the scripting tool. The scripting tool consists of two software programs: (i) the Rational Software Corporation's SQA Suite; and (ii) instruction and data tables stored in Microsoft Access. Functionally, the SQA program polls the instruction table for a transaction, collects the required information from the data tables, and transmits the information to RETAS at a pre-defined rate.

2.5.2 RETAS Processing and Response Time Intervals

RETAS processing involves two steps. In the first step, transactions are submitted to the Verizon NJ backend systems using the RETAS front-end, and a response is returned to the front-end web server. In the second step, a separate query instruction is used to retrieve responses from the web server, described as T0-T9 in Figure 6-1 below. Additionally, the path from T1 to T8 illustrates the submission and response process.

Figure 6-1: Time Intervals Associated with RETAS Transaction Processing

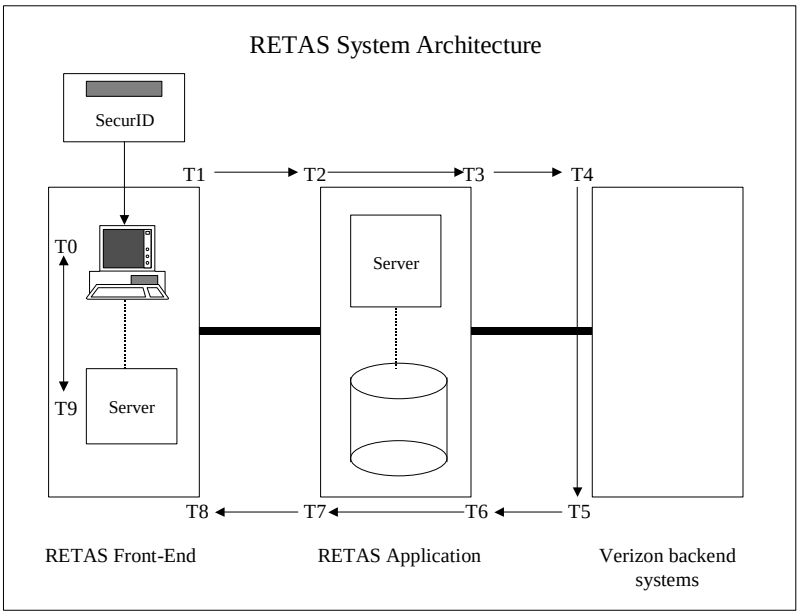

2.5.3 Time Intervals Associated with RETAS Transaction Processing

The combined responsiveness of M&R systems (RETAS front-end, RETAS and Verizon NJ backend) and the connectivity between them is measured by the time interval T1-T8, as illustrated in Figure 6-1 above. Time T2-T7, which is the interval from receipt of an instruction by RETAS to exit of a response from RETAS, is used to calculate metrics that are publicly reported by Verizon NJ.

This is an appropriate measure of RETAS performance under the following assumption:

Time T0-T9 was not evaluated in this test because this time interval depends on the connectivity option selected by Verizon NJ's wholesale customers. CLECs can use dial-up, 56 Kbps or T-1 circuits to connect the web client and the web server.

The scripting tool was used to submit transactions at December 2001 normal, peak, and stress loads. KPMG Consulting and Verizon NJ collected the response data from the scripting tool and the Verizon transaction logs.

This test simulated total Verizon volumes entering RETAS but only Verizon NJ transactions entering the backend systems. This approach, as illustrated in Figure 6-2 below, was used to include the potential impact of transactions submitted by other states on RETAS performance for New Jersey.

Figure 6-2: Verizon Impact on Verizon NJ RETAS Performance

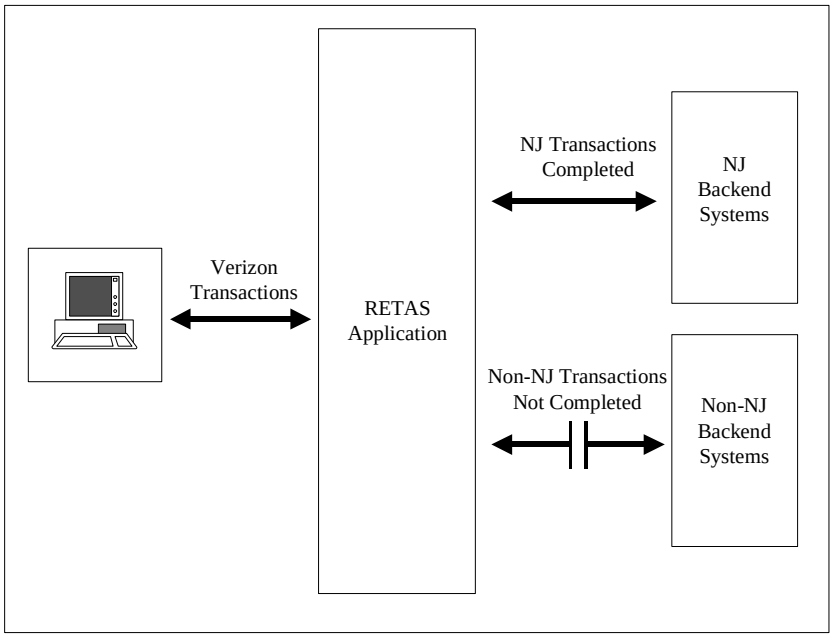

2.6 Analysis Methods

The M&R RETAS Performance Evaluation (TVV6) included a checklist of evaluation criteria developed by the Test Manager during the initial phase of the Verizon NJ Operations Support Systems (OSS) Evaluation. These evaluation criteria provided the framework of norms, standards, and guidelines for the M&R RETAS Performance Evaluation (TVV6).

The data collected were analyzed employing the evaluation criteria described in Section 3.1 below.

3.0 Results

This section identifies the evaluation criteria and test results.

3.1 Results Summary

The results of this test are presented in Table 6-7 below.

Table 6-7: TVV6 Evaluation Criteria and Results

Test Reference	Evaluation Criteria	Result	Comments
TVV6-1	Normal load transaction volumes are satisfactorily submitted and returned through the RETAS gateway.	Satisfied	756 normal hour transactions were submitted to determine if Verizon NJ's RETAS system processed the transactions accurately. Of the 756 transactions, 719 (95%) resulted in a successful response as defined in the RETAS Users Guide. KPMG Consulting applied a benchmark of 95%.
TVV6-2	Peak load transaction volumes are satisfactorily submitted and returned through the RETAS gateway.	Satisfied	589 peak hour transactions were submitted to determine if Verizon NJ's RETAS system processed the transactions accurately. Of the 589 transactions, 568 (96%) resulted in a successful response as defined by the RETAS User Guide. KPMG Consulting applied a benchmark of 95%.
TVV6-3	Stress load transaction volumes are satisfactorily submitted and returned through the RETAS gateway.	Satisfied	630 stress hour transactions were submitted to determine if Verizon NJ's RETAS system processed the transactions accurately. Of the 630 transactions, 597 (95%) resulted in a successful responses as defined by the RETAS User Guide. KPMG Consulting applied a benchmark of 95%.
TVV6-4	The Create Trouble transaction response time is parity with Verizon retail plus not more than seven seconds.	Satisfied	POTS wholesale average response time for metric MR1-01-Create Trouble, based on 296 transactions, was calculated to be 10 seconds per transaction. The Verizon NJ retail average response time for Create Trouble was 5.91 seconds per transaction. Verizon's retail average plus seven seconds indicate that the Carrier-to-Carrier standard parity measure was 12.91 seconds or less. The comparison of these two results conforms to the metric performance standard response time intervals as detailed in the New Jersey Carrier-to-Carrier Guidelines.

Test Reference	Evaluation Criteria	Result	Comments
TVV6-5	The Status Trouble transaction response time is parity with Verizon retail plus not more than seven seconds.	Satisfied	POTS wholesale average response time for metric MR1-02-Status Trouble, based on 130 transactions was calculated to be seven seconds per transaction. The Verizon NJ retail average response time for Status Trouble was 1.09 seconds per transaction. Verizon's retail average plus seven seconds indicate that the Carrier-to-Carrier parity measure was 8.09 seconds or less. The comparison of these two results conforms to the metric performance standard response time intervals as detailed in the New Jersey Carrier-to-Carrier Guidelines.
TVV6-6	The Modify Trouble transaction response time is parity with Verizon retail plus not more than seven seconds.	Satisfied	POTS wholesale average response time for metric MR1-03-Modify Trouble, based on 121 transactions was calculated to be seven seconds per transaction. The Verizon NJ retail average response time for Modify Trouble was 5.91 seconds per transaction. Verizon's retail average plus seven seconds indicate that the Carrier-to-Carrier parity measure was 12.91 seconds or less. The comparison of these two results conforms to the metric performance standard response time intervals as detailed in the New Jersey Carrier-to-Carrier Guidelines.
TVV6-7	The Request Cancellation of Trouble transaction response time is parity with Verizon retail plus not more than seven seconds.	Satisfied	POTS wholesale average response time for metric MR1-04-Request Cancellation of Trouble, based on 148 transactions, was calculated to be 14 seconds per transaction. The Verizon NJ retail average response time for Request Cancellation of Trouble was 7.44 seconds per transaction. Verizon's retail average plus seven seconds indicate that the Carrier-to-Carrier parity measure was 14.44 seconds or less. The comparison of these two results

Test Reference	Evaluation Criteria	Result	Comments
			conforms to the metric performance standard response time intervals as detailed in the New Jersey Carrier-to-Carrier Guidelines.
TVV6-8	The Trouble Report History transaction response time is parity with Verizon retail plus not more than seven seconds.	Satisfied	POTS wholesale average response time for metric MR1-05-Trouble Report History was based on 225 transactions, calculated to be 5 seconds per transaction. The Verizon NJ retail average response time for Trouble Report History was 0.49 seconds per transaction. Verizon's retail average plus seven seconds indicate that the Carrier-to-Carrier parity measure was 7.49 seconds or less. The comparison of these two results conforms to the metric performance standard response time intervals as detailed in the New Jersey Carrier-to-Carrier Guidelines.
TVV6-9	The Test Trouble (POTS only) transaction time is parity with Verizon retail plus not more than seven seconds.	Satisfied	POTS wholesale average response time for metric MR1-06-Test Trouble (POTS only) was, based on 782 transactions, calculated to be 54 seconds per transaction. The Verizon NJ retail average response time for Test Trouble (POTS only) was 54.57 seconds per transaction. Verizon's retail average plus seven seconds indicate that the Carrier-to-Carrier parity measure was 61.57 seconds or less. The comparison of these two results conforms to the metric performance standard response time intervals as detailed in the New Jersey Carrier-to-Carrier Guidelines.

G. Test Results: End-to-End Trouble Report Processing (TVV7)

1.0 Description

The objective of the End-to-End Trouble Report Processing (TVV7) test was to evaluate the timeliness and accuracy of Verizon New Jersey's (Verizon NJ) performance in conducting end-to-end maintenance and repair (M&R) for wholesale customers, including Competitive Local Exchange Carriers (CLECs).

2.0 Methodology

This section summarizes the test methodology.

2.1 Business Process Description

Wholesale Maintenance and Repair Process

Wholesale customers (CLECs) contact the Regional CLEC Maintenance Center (RCMC) to report maintenance and repair trouble conditions. The RCMC serves as the wholesale customers' single point of contact for verbally reporting troubles to Verizon NJ. Alternately, CLECs may initiate trouble reports through the Repair Trouble Administration System (RETAS).

Troubles reported through the RCMC are verified by Repair Service Clerks (RSCs) in the RCMC. RSCs (i) obtain the necessary trouble and access information (ii) initiate tests, if appropriate, to assist in the identification of fault and trouble type as well as the affected network element; and (iii) check the trouble ticket to ensure that it was correctly entered.

Trouble tickets for basic plain old telephone service (POTS) are entered into the Loop Maintenance Operating System (LMOS) and dispatched in to the central office or out to a field technician based on the type of fault to be repaired. Handle codes are used by both Verizon NJ and CLECs to route troubles to the frame/central office or the outside technician. RSCs enter handle codes in the LMOS system to direct dispatch to the appropriate work center. Similarly, a CLEC entering a trouble via RETAS is also capable of providing a handle code to control the dispatch.

Troubles for designed service (Specials) and UNE Loops are entered into the Work Force Administration/Control (WFA/C) system where, at the CLECs direction, the RCMC performs a hand-off to the central office or field technicians using WFA/Dispatch In (DI) or WFA/Dispatch Out (DO).

POTS troubles are prioritized based on system generated repair commitment dates and times provided by Verizon NJ. Special services troubles receive shorter repair intervals than POTS and are handled according to the type of service on a first come, first served basis. The RSCs can escalate a repair in response to a justifiable request and a CLEC entering a trouble via the RETAS system also has the ability to request an earlier appointment.

2.2 Scenarios

Table 7-1 shows the scenarios from Appendix A of the Master Test Plan (MTP) that were tested.

Table 7-1: Stand Alone Maintenance & Repair

Activity	Res. POTS	Bus. POTS	Res. ISDN	Bus. ISDN	Centrex	Private Line	PBX
Short on outside plant facility	X	X					X
Open on outside plant facility	X	X		X			
Short on the line within the central office	X	X			X	X	
Open on the line within the central office	X	X	X	X	X	X	X
Noise on line	X	X		X			
Echo on line	X	X					
Customer w/LNP not receiving incoming calls	X	X					
Customer receiving incoming calls intended for another customer's number.	X						
Call waiting not working	X	X					
Repeat dialing not working	X						
Customer cannot call 900 numbers	X						
Calls do not roll-over for customer w/ multi-line hunt group		X			X		
Call forwarding not working		X					
Caller ID not working	X	X					
Pick-up group order for large Centrex customer not functioning properly					X		
DS1 loop MUXed to DS3 IOF not functioning.							X

2.3 Test Targets & Measures

The test targets were the working resale and UNE circuits, which were evaluated for timeliness and accuracy of the repair and maintenance activities performed on them.

2.4 Data Sources

Information on the retail metrics used for comparison was gathered from the New Jersey Carrier-to-Carrier Guidelines. Additionally, Verizon NJ provided detailed trouble histories on all of the trouble tickets created for this test.

2.4.1 Data Generation/Volumes

This test does not rely on volume testing. The data generated during this test captured the Test Manager's verification of inserted and repaired faults and Verizon NJ trouble resolution data obtained using the history function in RETAS, as well as detailed trouble histories provided by Verizon NJ.

The following table details the faults evaluated at different Verizon NJ central office locations.

Table 7-2: TVV7 Types of Faults Observed

Process Area	Detail	KPMG CLEC Faults	Commercial CLEC Faults	Total
Dispatch In	Troubles handled by CO technicians	35	6	41
Dispatch Out	Troubles handled by outside plant technicians	12	43	55
Found OK (F/OK) / Customer Provided Equipment (CPE)		0	14	14
	Total	47	63	110

2.5 Evaluation Methods

For this test, Verizon NJ provisioned a test bed of circuits specified by the Test Manager. The test bed contained circuit types and features representative of those provisioned by Verizon NJ for its wholesale customers. The test bed was designed to let the Test Manager introduce all categories of commonly reported faults.

The initial phase of this test was conducted by field teams, who inserted the faults into working test bed lines according to the M&R test scenarios. The field teams were supported by KPMG Consulting personnel responsible for calling troubles in to the RCMC or entering them using RETAS. The faults were placed in circuits served by Marlton, Haddonfield, New Brunswick and Jersey City (Journal Square) central offices (COs). Each field team consisted of at least one KPMG Consulting team member and one Verizon NJ representative; the Verizon NJ representative inserted the faults under the direction of the KPMG Consulting testers.

Next, KPMG Consulting reported troubles caused by these faults to Verizon NJ either using the RETAS GUI interface or the toll free number for the RCMC. KPMG Consulting tracked Verizon NJ's response to reported troubles and gathered data for analysis. Specifically, data was collected relating to timeliness of repair and accuracy in diagnosing and resolving troubles. Once Verizon NJ closed out a trouble ticket, KPMG Consulting printed a trouble history from RETAS and checked the circuits to confirm that the repairs were made.

In addition to inserting its own faults, KPMG Consulting worked with a CLEC to further evaluate Verizon NJ's response to actual troubles during the months of December 2000 and January 2001. KPMG Consulting conducted observations at a CLEC's Repair Call Center as end-users called in actual troubles and the CLEC reported these troubles to Verizon NJ either over the phone or via RETAS. The description of the trouble as well as the Verizon NJ provided appointment and closeout times were recorded. Upon repair completion, these trouble tickets were reviewed for timeliness and to determine whether the trouble was successfully identified and the repair successfully executed. However, the accuracy of the closeout codes provided for these CLEC initiated trouble reports was not assessed as KPMG Consulting could not validate the exact nature of the fault.

2.6 Analysis Methods

The End-to-End Trouble Report Processing (TVV7) test included a checklist of evaluation criteria developed by the Test Manager during the initial phase of the Verizon NJ OSS Evaluation. These evaluation criteria provided the framework of norms, standards, and guidelines for End-to-End Trouble Report Processing (TVV7).

The data collected were analyzed using the evaluation criteria defined in Section 3.1 below.

3.0 Results

This section identifies the evaluation criteria and test results.

3.1 Results Summary

The results of this test are presented in Table 7-3 below.

Table 7-3: TVV7 Evaluation Criteria and Results

Test Reference	Evaluation Criteria	Result	Comments
TVV7-1	Resale end-to-end trouble reports are processed in accordance with Verizon NJ provided intervals with an on-time success rate, at least equal to that of retail.	Satisfied	KPMG Consulting evaluated 60 resale troubles with faults located in central offices, outside plant or proven to customer provided equipment (CPE). Of the 60 wholesale troubles evaluated, 56 or 93% of the troubles were successfully completed within the Verizon NJ provided appointment time. Based on the Carrier-to-Carrier MR-3 metric, a comparison of the successful completion rate for test troubles to the 86% success rate for combined retail service indicates the test success rate exceeded the retail success rate by 7%.
TVV7-2	Resale end-to-end trouble faults are accurately identified and repaired by Verizon NJ.	Satisfied	47 out of 47 troubles were identified and successfully repaired. This produced a 100% success rate for accuracy. KPMG Consulting applied a

Test Reference	Evaluation Criteria	Result	Comments
			benchmark of 95%
TVV7-3	Resale end-to-end trouble tickets repaired by Verizon NJ contain accurate data entries to the required fields in the system used to record maintenance activity.	Satisfied	24 of the 26 Verizon NJ provided closeout codes reviewed were accurate. This produced a 92% success rate. The difference between the KPMG Consulting benchmark of 95% and the test result of 92% is not statistically significant. According to our test design, any p-value below .0500 leads to conclusion of a statistically significant deviation from the standard. The p-value for this test was .3759.
TVV7-4	UNE/UNE-P end-to-end trouble reports are processed in accordance with Verizon NJ provided intervals.	Satisfied	KPMG Consulting evaluated 35 UNE-P and UNE-Loop troubles with faults located in central offices and the outside plant. Of the 35 troubles evaluated, 32 or 91% of the troubles were successfully completed within the Verizon NJ provided appointment timeframe. Based on the Carrier-to-Carrier MR-3 metric, a comparison of the successful completion rate for test troubles to the 82% success rate for combined retail service indicates the test success rate exceeded the retail success rate by 9%.
TVV7-5	UNE/UNE-P end-to-end trouble faults were accurately identified and repaired by Verizon NJ.	Satisfied	33 out of 34 troubles on UNE/UNE-P circuits were identified and successfully repaired. This produced a 97% success rate. KPMG Consulting applied a benchmark of 95%.
TVV7-6	UNE/UNE-P end-to-end trouble tickets repaired by Verizon NJ contain accurate data entries to the required fields in the system used to record maintenance activity.	Satisfied	27 of 29 Verizon NJ provided closeout codes reviewed were accurate. This produced a 93% success rate. The difference between the KPMG Consulting benchmark of 95% and the test result of 93% is not statistically significant. According to our test design, any p-value below .0500 leads to a conclusion of a statistically significant deviation from the standard. The p-value for this test was .4292.
TVV7-7	Special Circuit end-to-end trouble reports are processed in accordance with Verizon NJ stated	Satisfied	13 out of 13 troubles on special circuits were successfully repaired within the Verizon NJ provided objective appointment time resulting in a 100%

Test Reference	Evaluation Criteria	Result	Comments
	timing intervals.		success rate. KPMG Consulting applied a benchmark of 95%.
TVV7-8	Special Circuit end-to-end trouble faults were successfully identified and repaired by Verizon NJ and the related trouble ticket reports contain accurate data entries to the required fields in the system used to record maintenance activity.	Satisfied	13 out of 13 troubles on special circuits were successfully repaired. In addition, all of the troubles were accurately identified. This produced a 100% success rate for accuracy. KPMG Consulting applied a benchmark of 95%.

VII. Billing Domain Results and Analysis Section

This page is intentionally blank.

A. Test Results: Billing Work Center/Help Desk Support Evaluation (PPR12)

1.0 Description

The Billing Work Center/Help Desk Support Evaluation (PPR12) was an operational analysis of the Work Center/Help Desk processes and documentation developed by Verizon New Jersey (Verizon NJ) to provide support to Resellers and Competitive Local Exchange Carriers (CLECs) with Daily Usage Files (DUF) and billing related claims, questions, problems, and issues. Basic functionality, performance, escalation procedures, and security were evaluated.

2.0 Methodology

This section summarizes the test methodology.

2.1 Business Process Description

Two billing Help Desks support Resellers and CLECs with billing-related issues: the Billing and Collections Operations Center (B&COC) and the Wholesale Customer Care Center (WCCC). The B&COC's responsibilities include handling of billing inquiries, dispute resolution, processing billing adjustments, resends of paper bills, and collection of bills in arrears. This center serves Resellers, Unbundled Network Elements (UNE), and Unbundled Network Elements – Platform (UNE-P) CLECs. The WCCC is responsible for resolving technical and transmission issues concerning electronic billing media and DUF, resends and recreates of electronic bills, electronic billing files containing errors, usage and file content questions, software errors, requests for new systems availability, and changes to file transmission methods.

2.2 Scenarios

Scenarios were not applicable to this test.

2.3 Test Targets & Measures

The test target was the evaluation of the processes through which Resale, UNE, and UNE-P customers are provided work center support by Verizon NJ for billing related problems, questions, and issues. Processes and sub-processes in the test include the following:

- Receive Help Desk Calls
  - Answer calls
  - Interface with users
  - Log Calls
- Process help desk calls
  - Resolve user questions, problems, or issues
  - Receive claims
  - File claims
  - Process claims
  - Issue adjustment when necessary
  - Disposition of claim
- Close help desk calls
  - Post closure information
- Monitor status

- Track status
- Report status
- Escalations
  - Identify escalation procedures
  - Evaluate escalation procedures
- Manage workforce capacity
  - Identify work force planning procedures
  - Evaluate work force planning procedures
  - Review staffing plans
- Provide security and integrity
  - Provide secured access
- Manage the help desk process
  - Provide management oversight

2.4 Data Sources

The sources of data for this test included interviews with Verizon NJ personnel, Work Center Manuals, Reseller and CLEC Handbooks, Automatic Call Distributor (ACD) monthly reports, SN511 Collection Reports, criteria for service representative service observations conducted by the management team, minutes of Resale Forum and Group Meetings and various Verizon NJ internal reports. In addition, Verizon NJ training curriculum, organization charts, job aids and methods and procedures were reviewed.

2.4.1 Data Generation/Volumes

This test did not rely on data generation or volume testing.

2.5 Evaluation Methods

Process interviews were conducted with B&COC and WCCC personnel. In addition, on-site inspections of work operations were performed. Processes, methods and procedures, and supporting documentation were evaluated to determine whether Verizon NJ's internal procedures were sufficient to support billing inquiries.

2.6 Analysis Methods

The Billing Work Center/Help Desk Support Evaluation (PPR12) included a checklist of evaluation criteria developed by the Test Manager during the initial phase of the Verizon NJ OSS Evaluation. These evaluation criteria provided the framework of norms, standards, and guidelines for the Billing Work Center/Help Desk Support Evaluation (PPR12).

The data collected were analyzed employing the evaluation criteria referenced in Section 3.1 below.

3.0 Results

This section identifies the evaluation criteria and test results.

3.1 Results Summary

The results of this test are presented in Table 12-1 below.

Table 12-1: PPR12 Evaluation Criteria and Results

Test Reference	Evaluation Criteria	Result	Comments
PPR12-1-1	The collective scope and objectives of the B&COC and WCCC are adequate to address customer inquiries.	Satisfied	The collective scope and objectives of the B&COC and WCCC are adequate to address customer inquiries. Topical coverage includes ◆ Resends/Recreates of Current and Prior Period Bills ◆ Claims and Adjustments ◆ Training of CSRs ◆ Collections ◆ Transmission of Bill Media ◆ Software Issues ◆ Bill and DUF Content Inquires ◆ Escalation Procedures Work Center management periodically contacts CLECs as well as conducting surveys to obtain input concerning billing work center functions. Customer Care Indicators (CCI), Verizon internal scorecard, are also used to grade work center performance. This information was taken from interview notes as well as from onsite observations.

Test Reference	Evaluation Criteria	Result	Comments
PPR12-1-2	Billing Work Center/Help Desk responsibilities and activities are defined.	Satisfied	Responsibilities and activities of the B&COC and WCCC are defined in the Reseller and CLEC Handbooks. In addition, changes are posted to the Wholesale Markets Website and communicated to the CLEC community through email messages and Verizon NJ's Change Control process. Periodically CLEC Workshops are held to discuss WCCC and B&COC activities and procedures.
PPR12-1-3	Customer can initiate a claim or query through either the B&COC or WCCC	Satisfied	Claims can be referred to the B&COC via one of four points of entry: 1) telephone, 2) email, 3) fax, and 4) US mail. Procedures call for claims to be acknowledged within 48 hours of receipt. Claim numbers are entered into a database for tracking purposes. In the WCCC, billing claims are received via telephone and logged into the center's trouble management system, known as Tivoli. Claims are categorized, trouble tickets are automatically generated, and trouble ticket numbers are provided to customers for tracking purposes. For both the B&COC and WCCC, the process is found on the Verizon website: www.bellatlantic.com/wholesale/html/customer.doc KPMG Consulting also observed the claims process December of 2000 as previously described through interviews.

Test Reference	Evaluation Criteria	Result	Comments
PPR12-1-4	Customers have access to status of claim or query.	Satisfied	Customers are provided with tracking numbers when claims or queries are initiated in the B&COC. Claim numbers are entered into a database by B&COC agents and are used to track the status of claims. If a claim cannot be resolved within 30 days, customers are called to inform them of the status of the claim. KPMG Consulting conducted onsite interviews and observed the claims process. Within the WCCC, trouble tickets are used to track the status of customer queries. Customers are called within 24 hours of receipt of the query to report on its status. A second status call to the customer is placed within 48 hours of the initial issuance of the trouble ticket. Requests for resends of bills and recreates of daily usage files are input into a Lotus Notes database and referred to the Bill Production Support (BPS) group. When the request is fulfilled, BPS personnel enter the disposition of the referral in the database and it is sent back to the WCCC. Trouble tickets are not closed until confirmation is received from the customer that the matter was resolved. Both the B&COC and WCCC processes for claims can be found at: http://www.bellatlantic.com/wholesale/html/handbooks/clec/volume_3/c3s10_4.htm
PPR12-1-5	Customer escalation procedures are defined.	Satisfied	Customer escalation procedures are defined and posted on Verizon's Wholesale Markets Website: http://www.bell-atl.com/wholesale/html/res_escalate.htm and http://www.bell-atl.com/wholesale/html/res_escalate_clec.htm. Contact names and telephone numbers are provided.

Test Reference	Evaluation Criteria	Result	Comments
PPR12-1-6	Process includes consistent call intake procedures.	Satisfied	Automatic Call Distributors (ACD) are used in the B&COC and the WCCC to distribute calls to agents dedicated to handling billing-related matters. B&COC call agents make manual entries in a personal log if follow-up is required. WCCC call agents log calls into a trouble management system. Referrals to other departments are tracked through a Lotus Notes database. Customers are called within 24 hours with a status update. These processes were observed by KPMG Consulting during inspection of the WCCC and B&COC in December of 2000.
PPR12-1-7	Process includes procedures for resolving billing inquires and service requests.	Satisfied	Commitment intervals for the resolution of inquiries and service requests vary based on the complexity of the issue. Processing time depends on whether the request is made via telephone, fax, email or US mail and the number of component accounts contained in the summary bill. The process is documented on the Verizon website at http://www.bellatlantic.com/wholesale/html/handbooks/clec/volume_3/c3s1-_4.htm The steps to be followed to resolve specific types of inquires or requests can be found at: http://www.bellatlantic.com/wholesale/html/handbooks/clec/volume_3/c3s1-_4.htm

Test Reference	Evaluation Criteria	Result	Comments
PPR12-1-8	Process includes procedure for claim closure.	Satisfied	B&COC Operations Manual provides flow charts on the steps call agents are to follow when processing claims and inquiries. Adjustments resulting from claims can take up to two bill cycles following the closure of the investigation to appear on the bill. The process requires that agents verify that credit adjustments are applied to customer bills before closing out claims. Instructions for filing claims can be found on the Verizon website at http://www.bell-atl.com/wholesale/html/resale/volume_3.htm and http://www.bell-atl.com/wholesale/html/clec/volume_3.htm In July 2000, Verizon NJ informed KPMG Consulting that an internal audit of B&COC operations confirmed that established procedures that define claim closure activities were not consistently followed by agents. Management oversight was increased to ensure adherence to procedures. In December 2000, KPMG Consulting revisited the B&COC to observe representatives' handling of incoming calls from CLECs. KPMG Consulting observed representatives referencing the CLEC/Resale Handbook and using internal Verizon corporate repository information as outlined in Verizon's methods and procedural documentation.

Test Reference	Evaluation Criteria	Result	Comments
Process Management			
PPR12-2-1	Process includes procedures for status tracking, management reporting, and management intervention.	Satisfied	B&COC Team Leads conduct desk-side observations to assess agent compliance with prescribed methods and procedures. Weekly reviews are conducted by Team Leads to review the status of pending claims, number of new claims received, and number of claims closed. The status of claims is reviewed with the center's Director and department Vice President on a bi-weekly basis. KPMG Consulting visited the center participated in a weekly meeting, and observed this process. WCCC performance is monitored daily by the center's Director. A Dashboard Report tracks performance using six service indicators. Service standards are established, and performance is measured against each service standard. Supervisory personnel are responsible for daily monitoring and tracking of pending and incoming trouble tickets. Documentation from Verizon included: ◆ Report titled CLEC Adjustments by date. ◆ Methods and Procedure manual (M&P). ◆ Dashboard Report ◆ Pinnacle ACD/MIS Management reports

Test Reference	Evaluation Criteria	Result	Comments
PPR12-2-2	Process includes procedures for maintaining security and integrity of data access.	Satisfied	KPMG Consulting observed that procedures are in place to ensure security measures protect customer data. Access to customer proprietary data is restricted to authorized personnel. WCCC and B&COC staffs have special ID codes in addition to company-issued ID passes that allow them entry into the center. Electronic documentation is stored on a shared drive that only authorized personnel can access. Paper files are kept in a secure area. Agents have read-only access to legacy systems. All changes to account information must be authorized by Account Managers. Employees are required to sign a Code of Conduct, which outlines company policies concerning protecting customer information.

Test Reference	Evaluation Criteria	Result	Comments
Performance Management			
PPR12-3-1	Process includes procedures for obtaining CLEC feedback on the effectiveness of the billing work center(s).	Satisfied	CLEC Workshops are conducted every four to six weeks. CLECs are given an opportunity to provide input to the agenda. In addition, CLEC surveys are conducted to solicit comments on work center performance from the CLECs' perspective. KPMG Consulting observed CLEC Workshops given by Verizon in New York City on June 28th and July 18th, 2000.
PPR12-3-2	Process performance measures are defined, measured, and reviewed.	Satisfied	Process performance measures are defined and reports generated for reviews by Supervisors and Managers, who receive semi-annual performance evaluations, based in part on these results. Agent performance reviews are conducted annually and include an evaluation of whether the representative is meeting timeframes for both inquiries and claims. Documentation provided by Verizon to KPMG Consulting included: ◆ Criteria for Monthly service representative observations ◆ Minutes of Monthly Group Meetings. ◆ Daily Duties and Monthly Duties documents.

Test Reference	Evaluation Criteria	Result	Comments
PPR12-3-3	Process includes procedures for capacity planning.	Satisfied	ACD technology is used to answer and distribute incoming calls. ACD reports are monitored daily to identify fluctuations in workload; adjustments to the number of agents available for incoming calls are made as warranted. In the event of unexpected high call volumes, billing-related calls overflow to other groups within the WCCC for handling. The average call-to-agent ratio in the B&COC is approximately six calls per day per agent; therefore, overflow of calls to other groups has not been needed. Capacity planning is done by local management in each center. Formal documentation does not exist that details the steps involved in developing long range forecasts for resources and systems. Informal communications between forecasting groups and WCCC/B&COC staff alert center management to projected increases in CLEC activity. Resource and systems capacity planning is initiated to assess the impact of projected increases and to develop future staffing and system requirements.
PPR12-3-4	Process improvement responsibilities are assigned and executed.	Satisfied	Process improvements are not formally assigned to individuals; however, an informal process exists where center staff can submit suggestions to management for process improvements. Material changes to existing processes are handled through the company's Change Control process. Non-material changes are made at the discretion of functional supervisors. In addition, the internal Auditing Group, an independent group, conducts internal audits periodically to identify areas for improvement. When a need for improvement is identified, subject matter experts develop and pilot new procedures before full-scale implementation.

This page is intentionally blank.

B. Test Results: Daily Usage Production and Distribution Process Evaluation (PPR13)

1.0 Description

The Daily Usage Production and Distribution Process Evaluation (PPR13) was an operational analysis of the processes and documentation used by Verizon New Jersey (Verizon NJ) to create and transmit the Daily Usage File (DUF), which contains records of billable messages that belong to Competitive Local Exchange Carriers (CLECs). The inputs to this test included Verizon NJ interviews, Verizon NJ documentation, and the Verizon NJ Wholesale Markets website.

2.0 Methodology

This section summarizes the test methodology.

2.1 Business Process Description

Records appearing on the DUF either originate from Verizon NJ switch recordings or from other Incumbent Local Exchange Carriers (ILECs) via the Centralized Message Distribution System (CMDS), which contains records that are received on behalf of CLECs purchasing wholesale services (either UNE or Resale) from Verizon NJ. Verizon NJ processes these message records through a variety of systems to edit the records and determine ownership. Records determined to belong to a CLEC are translated into Exchange Message Interface (EMI) format and delivered to the CLEC on a daily basis via the transmission medium of the CLEC's choice.

2.2 Scenarios

Scenarios were not applicable to this test.

2.3 Test Targets & Measures

The test target was to determine the accuracy, completeness and timeliness of processes used by Verizon NJ to produce and distribute the DUF. The test included review of the following processes and sub-processes:

- Daily Usage Feed Production
  - DUF Balancing and Reconciliation
  - DUF Routing
- DUF Transmission
  - Data Transmission and Cartridge Delivery to CLEC
- Usage History Maintenance and Retransmission
  - DUF Backup Creation
  - DUF Backup Retrieval and Transmission

2.4 Data Sources

The sources of data for this test included the Resale Handbook Volume 3, Section 5 and the UNE-P CLEC Handbook Volume 3, Section 10.

2.4.1 Data Generation/Volumes

This test did not rely on data generation or volume testing.

2.5 Evaluation Methods

Process interviews were conducted with Verizon NJ subject matter experts (SMEs) to assess Verizon NJ's ability to produce and distribute DUFs. Processes, methods and procedures, and supporting documentation were evaluated to determine whether Verizon NJ's internal procedures were sufficiently complete and timely to support CLEC requirements.

2.6 Analysis Methods

The Daily Usage Production and Distribution Review (PPR13) included a checklist of evaluation criteria developed by the Test Manager during the initial phase of the Verizon NJ OSS Evaluation. These evaluation criteria provided the framework of norms, standards, and guidelines for the Daily Usage Production and Distribution Review (PPR13).

The data collected were analyzed employing the evaluation criteria referenced in Table 13-1 below.

3.0 Results

This section identifies the evaluation criteria and test results.

3.1 Results Summary

The results of this test are presented in Table 13-1 below.

Table 13-1: PPR13 Evaluation Criteria and Results

Test Reference	Evaluation Criteria	Result	Comments
PPR13-1	Scope and objectives of DUF production and distribution are defined.	Satisfied	DUF is produced and distributed as described in the Resale and CLEC handbooks. The process includes controls to provide customers with timely and accurate DUF data. A resend request can be readily initiated by a CLEC. Processes are in place to notify CLEC's of service disruption. Reference: Resale Handbook Volume 3, Section 5.2.
PPR13-2	DUF production and distribution procedures are defined.	Satisfied	Operational processes are defined and documented. Organization and process flow charts are provided. Delineation of organizational process responsibilities and activities is defined. Reference: Resale Handbook Volume 3, Section 5.2.

Test Reference	Evaluation Criteria	Result	Comments
PPR13-3	CLEC is provided with sufficient contacts for DUF production and distribution issues.	Satisfied	Contact numbers and hours of operation are published and the Verizon help desk role is defined. Reference: Resale Handbook Volume 3, Section 5.2.
PPR13-4	DUF balancing and reconciliation procedures are defined	Satisfied	During the PPR 13 interview, Verizon stated that balancing and reconciliation processes are defined and implemented within and between process steps. This is supported by the TVV8-3 results.
PPR13-5	DUF routing and guiding is controlled.	Satisfied	Usage routing and guiding processes are defined and documented. The routing and guiding processes contain functionality to correctly accumulate and guide usage. Reference: Resale Handbook Volume 3, Section 5.2.
PPR13-6	DUF data delivery options are documented.	Satisfied	Information regarding various usage delivery options is available to the CLEC. Reference: Resale Handbook Volume 3, Section 5.2.
PPR13-7	Changes to DUF interface specifications are subject to change management techniques.	Satisfied	During the PPR13 interview, Verizon stated that responsibilities for changes to interface specifications are documented and change management procedures are documented. Changes are communicated before the implementation of the change to facilitate testing of the changes by customers. Reference: Resale Handbook Volume 3, Section 5.2.
PPR13-8	DUF is prepared and delivered according to a defined production schedule.	Satisfied	A defined DUF production schedule exists. A defined delivery/transmission schedule exists with documented delivery/transmission timeframe. Reference: CLEC Handbook Volume 3, Section 10.2.
PPR13-9	CLEC is provided with an adequate status mechanism for tracking retrieval and retransmission requests.	Satisfied	During the PPR13 interview, Verizon stated that procedures for tracking retrieval and retransmission requests are defined for CLECs. A documented procedure exists for providing the status of pending/in-progress retrieval and retransmission

Test Reference	Evaluation Criteria	Result	Comments
			requests to the CLEC. Reference: Resale Handbook Volume 3, Section 5.2.
PPR13-10	Policies regarding historical availability of archived DUF are documented.	Satisfied	Retention time for DUF media is defined and documented. Reference: CLEC handbook, Volume 3, Section 10.2.
PPR13-11	Backup processes are periodically validated to ensure integrity of archived data.	Satisfied	During the PPR13 interview, Verizon stated that procedures are documented and implemented to ensure DUF backup files are useable. Reference: CLEC Handbook, Volume 3, Section 10.2.
PPR13-12	Procedures for CLEC retrieval and retransmission requests are documented.	Satisfied	Usage retrieval and retransmission procedures and processes are defined. Retransmission request procedures are defined. Retransmission timeframes and modes of transmission are documented. Reference: CLEC Handbook Volume 3, Section 10.2.
PPR13-13	Capacity management practices and/or processes related to DUF production and distribution are documented.	Satisfied	During the PPR 13 interview, Verizon stated that capacity management processes are documented. Documentation exists illustrating that capacity management is addressed on an ongoing basis. Reference: CLEC Handbook Volume 3, Section 10.2

C. Test Results: Bill Production and Distribution Process Evaluation (PPR14)

1.0 Description

The Bill Production and Distribution Process Evaluation (PPR14) was an operational analysis of the processes employed by Verizon New Jersey (Verizon NJ) to produce and distribute timely and accurate carrier bills. The objectives of the test were to determine the existence and functionality of procedures used to collect, calculate, and validate customer invoice data and to create and distribute bill media. Interviews, walk-throughs, and documentation reviews were conducted to evaluate these procedures.

2.0 Methodology

This section summarizes the test methodology.

2.1 Business Process Description

Verizon NJ prepares many types of bills; each bill type covers a specific set of products and services. Bills are produced by two primary billing systems, the Carrier Access Billing System (CABS) and the Customer Record Information System (CRIS). The CABS billing system is principally used to bill transport usage and facility charges to CLECs who lease unbundled services. The CRIS billing system principally produces bills for UNE (non-usage) and Resale services.

Verizon NJ CLEC bills are structured in a hierarchical manner. At the top of the hierarchy is the Summary Account or Master Account. Separate Summary accounts for Resale and UNE/UNE-P services are maintained. Charges for multiple individual billing telephone numbers (BTN) or component accounts are aggregated under the appropriate Summary Account.

Bill production and distribution begins with the collection of customer data, including service order activity posted for the current bill cycle, and usage data. Charges are calculated, payments and adjustments applied, and bills generated according to the customer-selected format(s). Bills are then mailed or transmitted to the customer.

2.2 Scenarios

Scenarios were not applicable to this test.

2.3 Test Targets & Measures

The test target was the process employed by Verizon NJ that supports the timely production of complete and accurate resale and wholesale customer bills. Following is a list of the processes and sub-processes that were included in the evaluation:

- Balance Cycle
  - Define balancing and reconciliation procedures
  - Produce control reports
  - Release cycle
- Deliver bill media
- Maintain bill history
  - Maintain billing information

- Access billing information
- Request resend

2.4 Data Sources

The sources of data for this test included interviews with Verizon subject matter experts and reviews of documentation supplied by Verizon NJ at the Test Manager's request. Interview sessions took place on August 10, 24, 25, and 30, 1999. In addition, follow up interviews were conducted on September 6, 11, and 28, 2000. The documents reviewed included reports generated by Verizon NJ's billing sub-systems, billing system documentation, and change management process documentation.

2.4.1 Data Generation/Volumes

This test did not rely on data generation or volume testing.

2.5 Evaluation Methods

The Bill Production and Distribution Process Evaluation (PPR14) assessed Verizon NJ's ability to produce accurate and complete bills, distribute bills in a timely manner, and archive prior period bills. Bill production processes include cycle balancing, reconciliation, and maintenance of bill history. Bill distribution processes include the retrieval of historical bills and media delivery.

Information about the processes used in the production, distribution, and archiving of bills was obtained through a series of interviews with Verizon NJ subject matter experts (SMEs), as well as through inspections of relevant documentation. This information was evaluated based on predetermined criteria that were developed at the onset of the test.

Processes were evaluated to assess the completeness of the methods and procedures used to facilitate cycle balancing, the compilation and application of service order activity, usage processing, changes to customer profiles, as well as, the application of payments and adjustments. The degree to which processes and procedures supported the accuracy of data was examined with respect to table updates, rating, bill print quality, bill delivery, implementation and tests of systems changes and the generation of control reports. In addition, processes were assessed to determine whether they facilitated the timely delivery of invoices.

2.6 Analysis Methods

The Bill Production and Distribution Process Evaluation (PPR14) included a checklist of evaluation criteria developed by the Test Manager during the initial phase of the Verizon NJ OSS Evaluation. These evaluation criteria provided the framework of norms, standards, and guidelines for the Bill Production and Distribution Process Evaluation (PPR14).

The data collected were analyzed employing the evaluation criteria listed in Section 3.1 below.

3.0 Results

This section identifies the evaluation criteria and test results.

3.1 Results Summary

The results of this test are presented in Table 3.1 below.

Table 3-1: PPR14 Evaluation Criteria and Results

Test Reference	Evaluation Criteria	Result	Comments
Completeness			
PPR14-1-1	Scope and objectives of the bill cycle balancing services cover wholesale customer requirements.	Satisfied	Interviews with SMEs in the numerous organizations that support wholesale billing indicate that the collective scope and objectives of these organizations cover cycle balancing requirements including: ◆ Ensuring usage is accounted for and correctly applied. ◆ Ensuring payments and adjustments are applied. ◆ Ensuring account balances are accurately rolled forward. ◆ Establishment of error and detection procedures
PPR14-1-2	Bill balancing responsibilities are defined.	Satisfied	Responsibilities for bill balancing are defined using the following processes. ◆ Production Management actively monitors status and progress of production billing systems. Escalation procedures are in place for rapid resolution. ◆ Procedures are defined in a Production Management Handbook to ensure consistent handling of production problems. ◆ Daily Production Meeting where billing system status is reviewed. Tracking reports are consistently used to monitor the status of bill production inputs. These reports include but are not limited to: o Incoming Usage Report, Usage Inventory Report o Usage Mismatch Report o Status of Service Orders o Daily End of Processing Report

Test Reference	Evaluation Criteria	Result	Comments
PPR14-1-3	Bill balancing procedures exist to identify and resolve out-of-balance conditions.	Satisfied	Bill balancing responsibilities are defined. Most individual balancing steps are embedded in the billing sub-systems. For example: ◆ ABENDs (Abnormal Endings) identify record error conditions requiring manual intervention. ◆ The Usage sub-system ensures that usage packs are not skipped and that duplicate packs are not processed. Usage that cannot be guided is captured on a Usage Mismatch Report for investigation. ◆ The Rating sub-system is responsible for reading the Accounts database for the purpose of rating service order activity, applying credit and debit adjustments and payments. Controls are in place to ensure all account details are in balance. Out-of-balance conditions are captured in ABEND reports. Supporting documentation of the existence of these sub-systems include examples of Carrier Access Billing System Error Reports, XG18 ABEND Descriptions (Partial List), and Carrier Access Billing System Usage Inventory Report.
PPR14-1-4	Process includes reasonability checks to catch errors not susceptible to pre-determined balancing procedures.	Satisfied	The Quality Billing Center (QBC) has overall responsibility for the accuracy of Verizon NJ wholesale billing. QBC Billing Operations provides manual review and audit of daily usage, event preprocessing, usage recycles, individual CLEC usage, service order activities and errors. Reports on “delayed” and “undelayed” accounts are produced during each cycle. Documentation provided by Verizon includes, Carrier Access Billing System Report titled Error Report, Monthly Rating Bill Extract as well as CABS Abend and Emergency Transmission Process document.

Test Reference	Evaluation Criteria	Result	Comments
PPR14-1-5	Process includes procedures to ensure all payments and adjustments have been properly captured and applied.	Satisfied	Procedures for the final reconciliation of payments and adjustments take place at the end of the billing cycle. Business rules are embedded in the programming code of sub-systems that process payments and adjustments, i.e. the CABS Cash and Supplemental sub-system processes cash transactions.
PPR14-1-6	Process includes procedures to ensure service order activity has been properly captured.	Satisfied	As service order transactions are completed, the following processes are used to assure quality flow through: ◆ Component accounts that are maintained in CRIS are updated to reflect service order activity. ◆ The Service and Equipment database and the Accounts database are also updated. ◆ CABS service orders originate with an ASR (Access Service request) that flows through the ASOP (Access Service Order Processor) system for editing and formatting. Notification is sent from CABS to ASOP advising whether service orders posted to CABS or were in error. If the account is out of balance, an ABEND condition will result and trigger manual intervention. Once corrected, service orders are re-circulated for processing. Supporting documentation of these processes included the following reports: Service Order Re-circulating History for ACSC-PA70, Account Database Out of Balance Report and the Service Order Status Report for ACSC/ZB-PA-70.

Test Reference	Evaluation Criteria	Result	Comments
PPR14-1-7	Process includes procedures to ensure customer usage is properly captured.	Satisfied	Network Operations has overall responsibility for ensuring all usage is correctly collected, processed, and submitted to billing. All errored usage records are referred to this group for disposition. The CABS Usage Subsystem reads the usage files from the CRIS usage interface. The Carrier Identification Code (CIC), feature group, and end office are used for guiding the usage to the Accounts database. The usage is summarized at the end office level and posted to the appropriate account. Usage errors are documented and investigated. Errors are documented in several different reports including the Unidentified (Mismatch) Usage Report and the Usage Inventory Report.
PPR14-1-8	Process includes procedures to ensure bill history retention requirements are operationally satisfied.	Satisfied	The Archive Billing System (ABI) maintains the historical billing data based on established retention rules. Dataset retention is managed by the mainframe Tape Management System (TMS). Backs up facilities are maintained for the print center.
PPR14-1-9	Process includes procedures to retrieve and transmit historical billing information.	Satisfied	Internal users (WCCC, B&COC, and Account Managers) generate online resend requests. The requests are batched for nightly processing by the ABI system. The retrieved billing data is then processed according to normal bill delivery procedures or according to special handling instructions associated with the resend request. Supporting documentation included the CABS-South Help Desk Log Report that lists requests from internal users on behalf of CLEC customer requests for resends of historical billing tapes, and the resolution of those requests.

Test Reference	Evaluation Criteria	Result	Comments
PPR14-1-10	Bill delivery responsibilities and activities are defined.	Satisfied	Responsibilities are discretely defined and assigned by bill media type: ◆ Printing and distribution of paper bills are the responsibility of the Monroeville Data Center. ◆ The creation and distribution of bills on tape are handled by the Richmond Data Center Documentation provided by Verizon includes: Carrier Access Billing System-South Documentation as well as interview notes by KPMG Consulting.
PPR14-1-11	Process includes procedures to ensure creation of customer bills on appropriate medium.	Satisfied	The process of selecting a customer's media type is typically done at the time the account is established. Change requests are handled through Account Managers. This process is documented in the CLEC Handbook on Verizon NJ Wholesale Customer Website.

Test Reference	Evaluation Criteria	Result	Comments
Accuracy			
PPR14-2-1	The process includes procedures to ensure recurring and non-recurring rates are accurately applied.	Satisfied	The CABS Rating Subsystem reads the Account database to identify service order information for which one-time charges and fractional charges should be applied. Business rules are embedded in the programming code within the Rating Subsystem. Controls are in place to recognize and report out-of balance conditions. CRIS bills use the same processes in the rating of retail bills with several additional steps added to the process. ◆ On bill day, the Accounts database and the Service and Equipment databases are read to select billable accounts and associated service and equipment elements ◆ A Billing application is used to assign rates, and standard phrase codes. Documentation provided by Verizon includes: CABS Abend and Emergency Transmission process document, CABS Production Process document, CABS Trouble Report process.

Test Reference	Evaluation Criteria	Result	Comments
PPR14-2-2	Process includes internal change management procedures to prioritize, test and implement system changes.	Satisfied	Change management procedures are in place that cover system and application changes from the inception of a change request through final implementation into production and production monitoring. The Software Engineering Services (SES) group coordinates requirements for CRIS billing system changes or enhancements. The VIPS (Verizon Information Processing Services) organization is responsible for establishing back-up procedures and policies, crisis management, security and maintenance of mainframes for CRIS. CABS system changes are developed and prioritized by the Carrier Access Services organization. Major releases (including new products, FCC/PUC mandates, tariff filings and rate changes) are done bi-monthly; maintenance releases are done on a monthly basis. These processes are documented in the CABS Change Management Process doc. and Access Billing Systems –South Change Management Process Change doc.

Test Reference	Evaluation Criteria	Result	Comments
PPR14-2-3	Process includes procedures to ensure usage is accurately rated and applied.	Satisfied	In CRIS, Toll Rating processes are used to rate Resale local and toll messages. Rated records are placed in a Toll Message file. On bill day, the Toll Message file is read and optional call plan discounts are applied. A Billing application is used to assign rates, standard phrase codes and to price minutes of use. Usage in CABS is rated by aggregating billable rate elements. The logic for usage rating is contained in a Pseudo-USOC table. The Rating Subsystem calculates the current charges at account and state levels as well as balances brought forward and total balances. Documentation provided by Verizon includes: Carrier Access Billing System, Usage Inventory Control document, CABS Production Process document and Unidentified (Mismatch) usage report.
PPR14-2-4	Process includes procedures to ensure customer profile changes such as change of address and bill media preferences are properly captured and applied.	Satisfied	Selection of media type is typically done at the time an account is established. CLECs typically choose a primary and secondary medium type. A FID (Field Identifier) is used to identify the media type chosen by the customer. Change requests are handled through Account Managers. Changes are reflected in the billing systems that route billing data and on control transmittals sent to the appropriate media center. Process and procedures can be found documented on the Verizon website at http://128.11.40.241/east/wholesale/resources/master.htm

Test Reference	Evaluation Criteria	Result	Comments
PPR14-2-5	Process provides for quality checks of bills.	Satisfied	The following quality checks take place before the bills are sent to the customer: ◆ Print quality checklist identifies visual checks to be performed. ◆ Visual checks are performed on a sample of print bills to ensure that all component account data as identified in the summary bill is present. Documentation provided by Verizon includes: CABS Procedures document, as well as KPMG Consulting interview notes from the Quality Billing Center.
Timeliness			
PPR14-3-1	Process includes procedures to ensure bills are shipped or transmitted according to the established schedule.	Satisfied	Procedures and associated control mechanisms are in place to ensure shipping of all media is done on a timely basis. Delivery (to the post office, Airborne, etc.) goals exist for all media, ranging from 24 hours for magnetic tape to three business days for printed bills. Documentation from Verizon includes: CABS Procedures document, and Roles and Responsibilities –Tape Library-South document.
PPR14-3-2	Bill delivery process performance measures are defined, measured and reviewed.	Satisfied	Metric BI-2 measures bill timeliness. Performance is measured against the New Jersey Carrier-to-Carrier Guidelines Performance Standards and Reports. The information used to calculate bill timeliness is collected in logs that are kept by bill period. The log contains the date bills are printed and the date bills are released to the post office. Separate logs are kept for CRIS and CABS bills. The approved metric is located in the Carrier-to-Carrier document on the New Jersey Board of Public Utilities website.

D. Test Results: Billing Functional Usage Evaluation (TVV8)

1.0 Description

The Billing Functional Usage Evaluation (TVV8) examined Verizon New Jersey's (Verizon NJ) ability to capture customer telephone usage as data records and validate that the resulting data records were complete, accurate, and delivered in a timely manner to Competitive Local Exchange Carriers (CLECs). KPMG Consulting acted as a non-facilities-based CLEC providing Resale and Unbundled Network Elements – Platform (UNE-P) services to business and residential customers. As part of its normal business process, Verizon NJ captured information about each instance of network usage for the KPMG Consulting CLEC and delivered the resulting information to KPMG Consulting.

On each business day, Verizon NJ collects call information from its switches. The switches generate events as calls are processed. Event information is recorded electronically. If any information is billable to a wholesale customer or if the information includes Inter-exchange Carrier (IXC) access records, then a CLEC file is created. This file, called the Daily Usage File (DUF), is delivered to CLECs using either cartridge tapes or an electronic transmission software package called the Network Data Mover (NDM).

The objectives of the Billing Functional Usage Evaluation (TVV8) test were to determine the completeness, accuracy, and timeliness of daily message processing by Verizon NJ. A transaction-based test was conducted to complete this evaluation.

2.0 Methodology

This section summarizes the test methodology.

2.1 Business Process Description

Records appearing in the DUF file come from two sources. First, when a CLEC customer completes a call on a line with a port leased from Verizon NJ, the Verizon NJ switch records call information on behalf of the CLEC. Second, if a CLEC leases an unbundled port, the switch will generate access records for InterLATA[49] calls originating from and terminating to the unbundled port. Finally, when a CLEC customer completes a call on a line being resold by Verizon NJ, the Verizon NJ switch records call information in the same manner as for Verizon NJ Retail customers. All of these call detail records are transmitted to Verizon NJ's data center for message processing.

[49] InterLATA calls are calls where the originating and terminating exchanges reside in different Local Access Transport Areas (LATA). These are commonly known as "long distance calls."

Non-billable records are discarded.[50] Records determined to belong to a CLEC are translated into Exchange Message Interface (EMI) format and delivered to the CLEC on a daily basis over the transmission medium of the CLEC's choice.

2.2 Scenarios

This transaction-based evaluation used scenarios representative of Resale and UNE-P products and services offered to business and residential customers in New Jersey. The scenarios represented available switch technologies (Nortel DMS100 & TOPS, Lucent 5ESS & OSPS), product and service types, and service change order types. Many of the scenarios involved a change, either in products or services, or in local service provider. Changes included conversions of account ownership, known as migrations, from one Local Exchange Carrier (LEC) to another, the addition of new lines, the addition of new accounts, feature changes and/or class of service changes.

Once the scenarios were identified, the orders were scheduled and executed. The migration orders were submitted with a specific due date. Test calls were placed before and after the migration date to ensure accurate routing of DUF records.

KPMG Consulting also developed test cases emulating a variety of telephone calls typically made by business and residential customers. The test cases included local, intra-LATA toll and long distance calls, as well as operator assisted and network service call types.

Test scripts were created by combining test scenarios with test cases in a variety of permutations. In this manner, the test scripts applied real-world call types against representative customer accounts. Finally, testers executed the test scripts in the field.

2.3 Test Targets & Measures

The test targets for the Billing Functional Usage Evaluation (TVV8) were recording, assembly, and delivery of relevant usage data. Each of these sub-process areas was evaluated for timeliness, accuracy, and completeness of DUF records.

2.4 Data Sources

The sources of data for this test included test calls placed by KPMG Consulting testers, test call logs, DUF files received from Verizon NJ, Exchange Message Interface (EMI) standards manual V.17 released in April 2000, Verizon Carrier-to-Carrier Guidelines and reviews of documentation supplied by Verizon NJ at KPMG Consulting's request.

2.4.1 Data Generation/Volumes

KPMG Consulting developed test scripts that required testers to place calls in the Verizon NJ calling region. Test calls included a variety of call types that were placed from Central Offices within the Verizon NJ calling region. In addition, a tester was placed in Denver, Colorado within the Qwest calling region to place and accept long distance calls, third-party billing calls, and collect calls. The following table identifies the locations used.

---

[50] Switches record both inbound and outbound calls. The Daily Usage Feed (DUF) consists of outbound local usage, intra-LATA toll usage, Verizon operator-assisted calls and Interexchange Carrier (IXC) originating and terminating access records. Non-billable records generated by the switch include incoming local calls, non-measured outgoing local usage, and operator inquiries that may or may not be charged at the operator's discretion. This list is non-exhaustive.

Table 8-1: TVV8 Test Calling Locations

Central Office	Address
Absecon	10 W Jimmie Leeds Rd., Galloway Township, NJ 08021
Haddonfield	1 Centennial Square, Haddonfield, NJ 08033
Jersey City	136 Magnolia Ave., Jersey City, NJ 07306-2904
Marlton	125 East Main St., Marlton, NJ 08053-2104
New Brunswick	268 Baldwin St., New Brunswick, NJ 08901-2947

2.5 Evaluation Methods

Execution of the Billing Functional Usage Evaluation (TVV8) required Verizon NJ to establish a test bed of accounts, against which test calls were placed. The test calls consisted of commonly placed incoming and outgoing call types that were generated over multiple switch types. The test included validation of expected usage results based on test calls placed by KPMG Consulting against DUF records received by KPMG Consulting CLEC.

Evaluation of the accuracy and completeness of the DUF files was based on a comparison of the call details logged by KPMG Consulting when the test calls were placed, and the DUF records delivered to KPMG Consulting by Verizon NJ.

2.6 Analysis Methods

The Billing Functional Usage Evaluation (TVV8) included a checklist of evaluation criteria developed by the Test Manager during the initial phase of the Verizon NJ OSS Evaluation. These evaluation criteria provided the framework of norms, standards, and guidelines for the Billing Functional Usage Evaluation (TVV8).

Tester call logs were examined to determine whether that specific call should appear on the DUF. Calls not expected to appear on the DUF were evaluated to ensure that no DUF record was received. This included calls made from Retail accounts, Resale long distance calls, Resale toll free calls, incoming calls to Resale accounts, and local calls made from flat-rated Resale lines and other non-billable calls. For all test calls that should have appeared on the DUF, KPMG Consulting examined the DUF data to locate a valid record meeting the specifications of the call as it was recorded in the test call log.

DUF Records were further examined to ensure DUF Accuracy, as defined in the NJ Carrier-to-Carrier Guidelines, Performance Metric BI-4 DUF Accuracy. This measure captured the accuracy of the usage records transmitted from Verizon NJ to KPMG Consulting on the DUF. The measure is derived by dividing the number of usage records delivered in the reporting period containing complete information and proper formatting by the total number of usage records delivered in the reporting period. DUF records were also verified to ensure that the records were received by the appropriate CLEC and to ensure that the records adhered to EMI guidelines. Results in Sections 3.1 and 3.2 of this report present findings for the Completeness and Accuracy of Matched DUF Records.

The DUF files received were examined to ensure that the Pack Header and Trailer had an accurate count of DUF records transmitted in that DUF file pack.

DUF Timeliness, as defined in the Carrier-to-Carrier Guidelines, Performance Metric BI-1 Timeliness of Daily Usage File, was measured by counting the number of business days between the creation of the message to the date the usage information is made available (transmission date) to the CLEC. The day the call was made is excluded from this count. The records included in the tables below include all files that were received electronically in December 2000.

The data collected were analyzed employing the evaluation criteria referenced in Table 8-2 below.

3.0 Results

This section identifies the evaluation criteria and test results.

3.1 Results Summary

The results of this test are presented in the table below.

Table 8-2: TVV8 Evaluation Criteria and Results

Test Reference	Evaluation Criteria	Result	Comments
TVV8-1	Expected DUF records are created and received by the correct owner.	Satisfied	KPMG Consulting received 97% of usage for telephone calls expected to generate usage. Of 891 test calls expected to generate usage, a usage record was generated for 860 telephone calls. KPMG Consulting applied a benchmark of 95% for this evaluation criteria. Detailed information appears in the Test Call Log and DUF Record Accuracy Analysis, Section 3.2.1 below.
TVV8-2	Unexpected DUF records are not created nor delivered to the incorrect owner.	Satisfied	KPMG Consulting received no unexpected DUF records from 579 test telephone calls that were not expected to generate a DUF record. Detailed information appears in the Test Call Log and DUF Record Accuracy Analysis, Section 3.2.1 below.
TVV8-3	DUF record packs are complete.	Satisfied	All Header and Trailer records contained a correct count of the number of records found within the pack. Detailed information appears in the Header/Trailer Accuracy and Completeness Analysis, Section 3.2.2 below.

Test Reference	Evaluation Criteria	Result	Comments
TVV8-4	DUF records adhere to EMI guidelines.	Satisfied	All DUF records produced by Verizon NJ were formatted in accordance with EMI guidelines.
TVV8-5	DUF record fields are accurately populated.	Satisfied	All DUF records produced by Verizon NJ contained field values in accordance with both EMI guidelines and expected results.
TVV8-6	DUFs are delivered to the CLEC in a timely manner.	Satisfied	KPMG Consulting received 98% of its DUF records within four business days. The standard in the Carrier-to-Carrier Billing BI-1 DUF Timeliness metric is 95% of DUF records received by the CLEC within four business days. Detailed information appears in the DUF Timeliness Analysis, Section 3.2.3 below.

3.1 Additional Data

3.2.1 Test Call Log and DUF Record Accuracy Analysis

The following tables display detailed results from the December 2000 test.

Table 8-3: TVV8 Tester Log Entry Breakdown

Category	Count
Total Number of Test Scripts not expected to produce a DUF Record	579
Total Number of Test Scripts expected to produce a DUF Record	891
Total Number of Test Scripts	1470

Table 8-4: TVV8 DUF Accuracy Analysis

Category	Count	Percentage of Total
Total Number of Test Scripts expected to produce a DUF Record that resulted in a matching DUF record	860	97%
Total Number of Test Scripts expected to produce a DUF Record that did not result in a matching DUF record	31	3%
Total Number of Test Scripts expected to produce a DUF Record	891	100%

3.2.2 DUF File Header/Trailer Accuracy and Completeness Analysis

Table 8-5: TVV8 Header/Trailer Accuracy and Completeness Summary

Total Number of DUF Files Received with at least one billable record	Number of DUF files with accurate record count	Percentage
1222	1222	100%

The actual counts matched the count in the header and trailer for all DUF files received.

3.2.3 DUF Timeliness Analysis

Table 8-6 documents DUF record timeliness for all DUF records received.

Table 8-6: TVV8 DUF Timeliness Analysis

Timeliness	Count	Cumulative Percentage
DUF records received within 1 business day	744	61%
DUF records received within 2 business days	303	86%
DUF records received within 3 business days	11	87%
DUF records received within 4 business days	136	98%
DUF records received within 5 business days	28	100%
Total DUF Records Received	1222	100%

3.2.4 Missing DUF Files Analysis

There were no days during the testing that KPMG Consulting did not receive all expected files.

E. Test Results: Functional Carrier Bill Evaluation (TVV9)

1.0 Description

The Functional Carrier Bill Evaluation (TVV9) reviewed Verizon New Jersey's (Verizon NJ) ability to deliver timely and accurate invoices to Competitive Local Exchange Carriers (CLECs). This evaluation examined the content and the timeliness of delivery of carrier bills received by KPMG Consulting in the role of a virtual CLEC. This evaluation examined Resale, UNE and UNE-P accounts to determine if Verizon NJ accurately billed usage charges, monthly recurring charges, and non-recurring charges via the bill of record, i.e., the paper bill.

2.0 Methodology

This section summarizes the test methodology.

2.1 Business Process Description

Verizon NJ prepares many types of CLEC bills that are distributed monthly by billing periods. Each bill type covers a specific set of products and services. Two primary billing systems, the Carrier Access Billing System (CABS), and the Customer Record Information System (CRIS) produce bills. The CABS billing system is principally used to bill transport usage and facility charges to CLECs who lease Unbundled Network Element-Platform (UNE-P) services. The CRIS billing system principally produces bills for UNE, UNE-P (non-usage) and Resale services.

Table 9-1 below describes the bill types and formats selected for evaluation.

Verizon NJ's bills are structured in a hierarchical manner. At the top of the hierarchy is the Master Account. Charges for multiple individual component telephone numbers, which are referred to as Billing Telephone Numbers (BTNs), are aggregated under the Master Account.

Table 9-1: Functional Carrier Bill Cycle Evaluation - Bills Reviewed

Bill Format Type	Description of Bills	Bill Media Format Options
CRIS Resale	Bills for Resale Services	Hard Copy
CRIS UNE/CRIS UNE-P	Billing for the following elements: Loops Line Ports DID – Direct Inward Dialing Directory Listing	Hard Copy
CABS UNE	Billing for the following elements: Transport Facilities	Hard Copy

2.2 Scenarios

The analysis of carrier bill content was dependent on the successful execution of Daily Usage Feed testing and ordering and provisioning scenarios.

Test scenarios used for bill validation purposes included the following activities:

Migration/conversion

- Migrate "as is/as specified" of Verizon NJ customer to UNE/Resale CLEC
- Migrate "as is/as specified" of UNE/Resale CLEC customer to Verizon NJ
- Migrate "as is/as specified" of UNE CLEC customer to Resale CLEC

Change to Customer Line (Add/Modify/Delete)

- Add features to existing UNE/Resale customers
- Add new lines for UNE/Resale customers
- Change services for existing UNE/Resale customers
- Disconnect services for UNE/Resale customers

2.3 Test Targets & Measures

The test target was the completeness and accuracy of the CRIS/CABS carrier billing and the processes that support timely and accurate production and distribution of the carrier bills in accordance with Verizon NJ's published specifications. Included in the test target are the following processes and sub-processes:

- Maintain bill balance
  - Carry balance forward
- Bills and delivery

- Verify normal recurring charges
- Verify one-time charges
- Verify prorated recurring charges
- Verify usage charges
- Verify discounts
- Verify adjustments
- Verify late charges
- Receive bill copy

2.4 Data Sources

The data collected for the test included the CLEC Handbook, the Resale Handbook, Exchange Message Interface (EMI) documentation; NJ and FCC tariff information, bill samples, telephone directories and data provided by CCMI Online Tariff Service.

2.4.1 Data Generation/Volumes

This evaluation did not rely on volume testing. Data included in this evaluation were gathered from multiple sources including Local Service Requests (LSRs), Provisioning Completion Notifications (PCMs) Billing Completion Notifications (BCMs), Customer Service Requests (CSRs), Daily Usage Files (DUFs), and the Verizon NJ carrier bills delivered to KPMG Consulting. These data were analyzed to create expected results.

2.5 Evaluation Methods

KPMG Consulting selected a subset of Resale, UNE and UNE-P product and service offerings for evaluation based on the requirements documented in the Verizon NJ OSS Evaluation Master Test Plan, Appendix A, Test Scenarios.

Verizon NJ established test beds based upon scenarios in the Master Test Plan (MTP). A subset of these test scenarios was chosen for the purposes of bill validation. This test bed provided a mix of line types and line activities reflective of the scenarios contained in the MTP. Test scenarios were taken from orders issued during the Pre-Order, Order, and Provisioning (POP) Functional Evaluation (TVV1). These test scenarios were based on Appendix A of the MTP.

Bill validation was conducted over multiple bill periods with the majority of test cases validated over at least two bill periods for the same set of customers. Variances occurred due to the timing of certain orders and usage testing. Charges were examined for both Resale and UNE billing.

Verizon NJ's documentation was reviewed to gather information related to bill structure, content, UNE bill elements, and Resale bill elements for each of the relevant bill types. In addition, KPMG Consulting conducted meetings with Verizon NJ subject matter experts to review bill format layouts and to determine the applicable rate elements for various services. Using this information, KPMG Consulting constructed a detailed test plan and bill validation procedures.

Expected results from test order activity were developed by extracting data from Local Service Requests, Local Service Confirmations, Provisioning Completion Notices, Billing Completion Notices, Customer Service Records, tariff information and Daily Usage Feed (DUF) records. Expected results for usage charges were developed using data from DUF records, created as a result of test calls made during the course of the Billing Functional Usage Evaluation (TVV8). Expected results were defined for each test case based on the policies, business rules, and rate structure specified in Verizon NJ documentation and procedures. Expected results were compared to billing invoices produced by Verizon NJ to verify that charges were appropriately and accurately billed.

Validation procedures included an examination of recurring and non-recurring charges, pro-ration calculations, service establishment and disconnection dates, adjustments, late payment charges, and unpaid balances. KPMG Consulting also examined bills that contained usage charges for billable messages to verify the accuracy of the usage billing components, rates, and quantities.

Bill formats were reviewed to verify that required elements (e.g., pro-rations, Other Charges & Credits (OC&C), recurring charges, and usage charges) appeared on the appropriate bill. The CRIS Resale, UNE, and UNE-P bill format types were examined for matches with criteria related to Bill Format, at the Master Account and Component Account Levels, Bill Calculations, Cross Check Totals, Bill Content, and Timeliness of bill delivery.

Timeliness of Carrier Bill delivery (BI2), as defined in the May 2000 New Jersey Carrier-to-Carrier Guidelines Performance Standards and Reports, was measured during this evaluation. According to the metric, timeliness is measured by counting the number of business days from the bill date to the date the paper bill was sent and dividing that number by the count of the carrier bills distributed. Because KPMG Consulting was unable to observe the actual mailing of bills by Verizon NJ, for purposes of this analysis the timeliness of carrier bill delivery was determined by counting the number of business days from the bill date to the date received. For example, if the October 16th bill is received on October 26th, the number of days for receipt will be listed as 7 days (10 days minus 3 weekend days = 7 business days). Results are listed for paper bills that were the subject of the Functional Carrier Bill Evaluation (TVV9) received during the months of August 2000, September 2000, and October 2000 for Resale, UNE, and UNE-P bills.

2.6 Analysis Methods

The Functional Carrier Bill Evaluation (TVV9) included a checklist of evaluation criteria developed by the Test Manager during the initial phase of the Verizon NJ OSS Evaluation. These evaluation criteria provided the framework of norms, standards, and guidelines for the Functional Carrier Bill Evaluation (TVV9).

The data collected were analyzed employing the evaluation criteria referenced in Section 3.1 below.

3.0 Results

This section identifies the evaluation criteria and test results.

3.1 Results Summary

The results of this test are presented in Table 9-2 below.

Table 9-2: TVV9 Evaluation Criteria and Results

Test Reference	Evaluation Criteria	Result	Comments
Bill Format – Master Account Level			
TVV9-1	The appropriate major bill sections appear on the CRIS and CABS bills per Verizon NJ's documentation.	Satisfied	KPMG Consulting test analysis found that Verizon NJ's bills met this criterion; all major sections appeared on master account bills as expected. KPMG Consulting examined three bill types: Resale paper bills, UNE-P paper bills and UNE paper bills. Documentation detailing Verizon NJ bill formats used in KPMG Consulting's analysis include Verizon Resale and CLEC Handbooks, as well as sample bills. A total of 96 bills were evaluated from three product families: resale, UNE-P and UNE.
TVV9-2	The appropriate data appears on each of the CRIS and CABS bill sections under the master account.	Satisfied	KPMG Consulting test analysis found that the details for component accounts were accurately contained within the master account bill in all test scenarios except migrations back to Verizon NJ (commonly referred to as winbacks). In these instances, the component accounts were listed in the summary section of the master account bill but the details were not always included with the master account in the same month's invoice. However, these accounts were provided on the bill rendered in the following month without being listed in the summary section. Verizon NJ's documentation was updated to reflect the unique handling of this billing event. See Verizon Resale Handbook, September 2000, Vol. III, Section 5.3.1. Documentation detailing Verizon NJ's bill formats used in KPMG Consulting's analysis included Verizon's Resale and CLEC Handbooks, as well as sample bills.
TVV9-3	The appropriate account appears under the correct master account.	Satisfied	KPMG Consulting's test analysis found that the appropriate sub-accounts appeared under the correct master account. Documentation detailing Verizon NJ's bill formats used in KPMG Consulting's analysis included Verizon's Resale and CLEC

Test Reference	Evaluation Criteria	Result	Comments
			Handbooks, as well as sample bills.
Bill Format – Component Account Level			
TVV9-4	Major bill sections appear on the bills per Verizon NJ's documentation.	Satisfied	KPMG Consulting found that all appropriate major sections on component bills appeared on the bills as expected. KPMG Consulting examined test cases for Resale paper bills, UNE-P paper bills and UNE paper bills. Documentation detailing Verizon NJ's bill formats used in KPMG Consulting's analysis included Verizon's Resale and CLEC Handbooks, as well as sample bills
TVV9-5	The appropriate data appears on each of the bill sections under the component section.	Satisfied	KPMG Consulting found that all appropriate data appeared in each of the bill sections under the component section for the three bill types examined. Documentation detailing Verizon NJ's bill formats used in KPMG Consulting's analysis included Verizon's Resale and CLEC Handbooks, as well as sample bills.
Bill Calculations			
TVV9-6	All calculations correspond with the calculation definition or tariff.	Satisfied	KPMG Consulting found that the calculations correspond with the calculation definitions or tariffs. KPMG Consulting used the tariff website provided by Verizon. The tariff website address is: http://www.bellatlantic.com/tariffs_info/intra/index.html.
TVV9-7	Cross-totals, i.e. the sum of each section of the bill, are correct.	Satisfied	KPMG Consulting found that calculations for all cross-totals were correct in every instance for the three bill types examined (Resale paper bills, UNE-P paper bills, and UNE paper bills). Documentation detailing Verizon NJ's bill formats used in KPMG Consulting's analysis included Verizon's Resale and CLEC Handbooks, as well as sample bills.
Cross Check Totals			
TVV9-8	All cross checks match expected results. The sum of each section carried over to a new section of the bill.	Satisfied	KPMG Consulting found that the carry-over of cross-totals from one section to another was correct on all bills. Documentation detailing Verizon NJ's bill formats used in KPMG Consulting's analysis included

Test Reference	Evaluation Criteria	Result	Comments
			Verizon's Resale and CLEC Handbooks, as well as sample bills.
Bill Content			
TVV9-9	Monthly recurring charges match expected results.	Satisfied	KPMG Consulting's evaluation of the 24 Resale bills, 45 UNE-P bills and 27 UNE bills from August 2000 through Jan 2001 revealed that: 98% of the Resale monthly recurring charges were accurately billed on the 24 resale test cases evaluated. The remaining 2% included incorrect billing for port cost recovery charge, voice and data switch and rounding. 98% of the UNE-P monthly recurring charges were billed in accordance with applicable tariffs. The remaining 2% consisted of unexpected federal universal fund charges, specialized routing charges and rebundled basic loop charges. 100% of the UNE monthly recurring charges were billed in accordance with applicable tariffs
TVV9-10	One-time charges match expected results.	Satisfied	KPMG Consulting found that one-time charges matched expected results for the orders reviewed. KPMG Consulting's evaluation of the bills from August 2000 through January 2001 revealed that: 98% of the Resale one-time charges were accurately billed. The remaining 2% represented the unexpected appearance of federal taxes. Verizon NJ rectified the tax status of KPMG Consulting accounts in the course of the testing period. KPMG Consulting verified that subsequent bills did not reflect federal tax. 98% of the UNE-P one-time charges were accurately billed. The remaining 2% was accounted for by the appearance of unexpected credits for disconnects on the bills. 96% of the UNE one-time charges were accurately billed. The remaining 4% was accounted for by under-billing by Verizon of one-time charges

Test Reference	Evaluation Criteria	Result	Comments
			associated with temporary suspension of accounts. Verizon NJ performed a system upgrade on April 21, 2001 to correct the issue. The May 2001invoice rendered following the upgrade was verified as containing the appropriate charges for temporary suspensions. Documentation detailing Verizon NJ's rates used in KPMG Consulting's analysis included applicable tariffs and contract rates provided by Verizon.
TVV9-11	Prorated charges match expected results.	Satisfied	KPMG Consulting's evaluation of the bills from August 2000 through January 2001 revealed that: 100% of the Resale prorated charges billed were accurate. 99% of the UNE-P prorated charges billed were accurate. The remaining 1% was accounted for by an unexpected unbundled cross connect charge. 100% of the UNE prorated charges billed were accurate. Documentation detailing Verizon NJ's rates used in KPMG Consulting's analysis included applicable tariffs and contract rates provided by Verizon.
TVV9-12	Usage charges match expected results.	Satisfied	100% of Resale usage charges were accurately billed. 99.92% of UNE usage charges billed were accurately billed. Mileage charges associated with calls terminating in ported numbers constitute the difference of .08% between expected charges and actual charges. Documentation detailing Verizon NJ's usage rates used in KPMG Consulting's analysis included applicable NJ State and FCC tariffs and contract rates provided by Verizon.
TVV9-13	Discounts match expected results on Resale bills.	Satisfied	KPMG Consulting's test analysis found that discounts matched expected results on the KPMG Consulting CLEC Resale bills. Documentation detailing Verizon NJ's Resale and promotional discounts used in KPMG

Test Reference	Evaluation Criteria	Result	Comments
			Consulting's analysis are available on the following website: http://www.bellatlantic.com/wholesale/html/handbooks/resale/volume_1/r1s4_3.htm#P19_390 During the test period the resale discount provided by Verizon for resale bills in NJ was 17.04%.
TVV9-14	Adjustments match expected results.	Satisfied	KPMG Consulting's test analysis found that adjustments matched expected results. For example, credits for services disconnected were correctly applied on the KPMG Consulting CLEC bills. The Verizon CLEC Handbook contains information about pro-rated credits on disconnected accounts.
Accuracy			
TVV9-15	Bills contain accurate charges.	Satisfied	98.9% of all charges appearing on the bills received during the test period were accurate. The test period was from August 2000 through January 2001[51]. The BI 3 metric, as defined in the May 2000 New Jersey Carrier-to-Carrier Guidelines Performance Standards and Reports, was under review during the test period of August 2000 through January 2001 and no parity measurements were reported by Verizon NJ.
Completeness of Fractional Recurring Charges			
TVV9-16	Bills contain fractional recurring charges for the portion of the billing cycle that service was installed or terminated.	Satisfied	The percent completeness of fractional charges appearing on bills received during the test period was 99.6%. The test period was from August 2000 through January 2001[51]. The BI 7 metric, as defined in the May 2000 New Jersey Carrier-to-Carrier Guidelines Performance Standards and Reports, was under review during the test period of August 2000 through January 2001 and no parity measurements were reported by Verizon NJ.

[51] Two of the 96 tests cases were outside of this period.

Test Reference	Evaluation Criteria	Result	Comments
Completeness of Non-Recurring Charge			
TVV9-17	Bills contain non-recurring charges for that portion of the billing cycle that service was installed or terminated as defined in Verizon NJ's OSS Test Metric BI-8.	Satisfied	97.3% of non-recurring charges appearing on bills received during the test period were complete. The test period was from August 2000 through January 2001[51]. The BI 8 metric, as defined in the May 2000 New Jersey Carrier-to-Carrier Guidelines Performance Standards and Reports, was under review during the test period of August 2000 through January 2001 and no parity measurements were reported by Verizon NJ.
Timeliness			
TVV9-18	Bills are delivered in a timely manner.	Satisfied	98.2% of the CRIS bills were received within ten business days.

3.2 Additional Data

3.2.1 Analysis of the Timeliness of Carrier Bill Delivery

Analysis of bill delivery was accomplished by comparing the bill date with the date the bill was received. Paper bills for Resale, UNE-P, and UNE were used for this analysis. The results represent CRIS paper bills received in the months of August 2000, September 2000, and October 2000. The performance standard for this test was "98% of the CRIS paper bills sent to the carrier within 10 business days" as defined in the May 2000 New Jersey Carrier-to-Carrier Guidelines Performance Standards and Reports, metric BI-2; Timeliness of Carrier Bill. Because KPMG Consulting was unable to observe the actual mailing of these bills by Verizon NJ, for purposes of this analysis the timeliness of carrier bill delivery was determined by counting the number of bills received within 11 business days.

[51] Two of the 96 tests cases were outside of this period.

This page is intentionally blank.

VIII. Performance Metrics Domain Results and Analysis Section

This page is intentionally blank.

A. Test Results: Metrics Standards and Definitions Documentation Verification and Validation Review (PMR1)

1.0 Description

This test evaluated metrics definitions and standards documentation and reviewed the related policies and practices. This included the documentation, policies, and practices associated with both Competitive Local Exchange Carrier (CLEC) measurements and, for standards that involve Verizon New Jersey (Verizon NJ) retail analogs, retail measurements. This test relied on checklists, document reviews and inspections.

2.0 Methodology

This section summarizes the test methodology.

2.1 Business Process Description

In its initial local competition proceeding, the State of New Jersey Board of Public Utilities (NJ BPU) adopted "on an interim basis…"[52] service quality performance standards for Verizon NJ proposed by AT&T Communications of New Jersey, Inc. In January 1998, Verizon NJ and Sprint Communications Company, LP filed motions challenging this decision.

In July 1998, the NJ BPU established a Technical Solutions Facilitation Team (TSFT), consisting of Verizon, AT&T, MCI Worldcom, Inc., Sprint, RCN, Integrated Telephone Services and Cablevision Lightpath, Inc., to resolve, in a collaborative manner, specific issues that it deemed "impediments to competition."[52]

TSFT discussions on performance standards began in February 1999. On March 4, 1999, Verizon NJ filed with the NJ BPU its proposed guidelines entitled, New Jersey Carrier-to-Carrier Guidelines: Performance Standards and Reports, containing 133 performance measurements.

On August 11, 1999, Verizon NJ presented to the NJ BPU another version of the Carrier-to-Carrier Guidelines consisting of 149 performance measurements that included changes recommended by the TSFT participants.

Meanwhile, a number of events in New York, Pennsylvania and at the FCC led to further revisions to the Guidelines. In November 1999, the Pennsylvania Public Utility Commission (PaPUC) adopted interim metrics guidelines containing 169 metrics for use during the Pennsylvania OSS test. In the meantime, Bell Atlantic New York was experiencing difficulties with its OSS, leading to recommendations for adoption of additional metrics.

[52] State of New Jersey Board of Public Utilities, Telecommunications Order, Doc. No. TX95120631 (December 1997).

The NJ BPU adopted the New Jersey Carrier-to-Carrier Guidelines on May 25, 2000, consisting of 207 metrics, incorporating metrics from Pennsylvania and New York. In order to assure the timely development and implementation of "under development" metrics, the NJ BPU adopted a schedule for the implementation and reporting of these metrics. The schedule required 11 out of 72 "under development" metrics to be implemented by July 1, 2000 and reported on the August 25, 2000 Carrier-to-Carrier Report. The remaining 61 "under development" metrics were required to be implemented by August 1, 2000 and reported on the September 25, 2000 Carrier-to-Carrier report.

The May 2000 New Jersey Carrier-to-Carrier Guidelines define and describe the metrics that Verizon NJ is required to report in the monthly Carrier-to-Carrier Reports. The Guidelines detail metric reporting requirements, including products, geographic breakouts, exclusions, and performance standards.

Verizon NJ produces Carrier-to-Carrier Reports on a monthly basis. The due date mandated by the NJ BPU for authorized parties to receive the Carrier-to-Carrier Reports is the 25th of the month for the previous month's data. These reports document Verizon NJ's calculated values for performance measures in the categories of pre-ordering, ordering, provisioning, maintenance and repair, network performance, billing, operator services and databases, and general.

2.2 Scenarios

Scenarios were not applicable to this test.

2.3 Test Targets & Measures

The test target was the Verizon NJ metrics standards and definitions process and included evaluation of the following sub-processes:

- Documentation of metrics standards and definitions
- Distribution of metrics standards and definitions
- Distribution of metrics reports

2.4 Data Sources

Primary sources included the May 2000 New Jersey Carrier-to-Carrier Guidelines, Carrier-to-Carrier Reports and the NJ BPU Order, Docket Nos. TX95120531 and TX98010010.

Data Generation/Volumes

This test did not rely on data generation or volume testing.

2.5 Evaluation Methods

The Metrics Standards and Definitions Documentation Verification and Validation Review (PMR1) consisted of reviewing two types of Verizon NJ metrics documentation 1) New Jersey Carrier-to-Carrier Guidelines: Performance Standards and Reports and 2) the New Jersey Carrier-to-Carrier Reports.

KPMG Consulting examined the Carrier-to-Carrier Guidelines to verify that the guidelines accurately represented Verizon NJ's reporting agreements with the NJ BPU. KPMG Consulting also examined Verizon's process for distributing the Carrier-to-Carrier Guidelines and Reports to verify that they were available to Verizon's wholesale customers on a consistent basis. Lastly, KPMG Consulting verified that Verizon published the Carrier-to-Carrier Reports on time.

2.6 Analysis Methods

The PMR1 test included a checklist of evaluation criteria developed by the Test Manager during the initial phase of the Verizon NJ OSS Evaluation. These evaluation criteria provided the framework of norms, standards and guidelines for the test.

The data collected were analyzed employing the evaluation criteria referenced in Table 1 below.

3.0 Results

This section identifies the evaluation criteria and test results.

3.1 Results Summary

The results of this test are presented in Table 1-1 below.

Table 1-1: PMR1 Evaluation Criteria and Results

Test Reference	Evaluation Criteria	Result	Comments
PMR1-1	The metric definitions and standards in use were approved by the regulatory agency.	Satisfied	KPMG Consulting verified that the metric definitions and standards used by Verizon NJ during the test months were based on the May 2000 New Jersey Carrier-to-Carrier Guidelines approved by the NJ BPU Order, Docket Nos. TX95120531 and TX98010010.
PMR1-2	Metric definitions in the Verizon NJ Carrier-to-Carrier Guidelines are consistent with the intent of metrics.	Satisfied	KPMG Consulting compared the English language definition of the Pre-Ordering, Ordering, Provisioning, Maintenance & Repair, Network Performance, Billing, Operator Services& Databases, and General metrics in the Carrier-to-Carrier Guidelines with the corresponding metric titles and found they are consistent.
PMR1-3	The documented metric calculations in the Verizon NJ Carrier-to-Carrier Guidelines are consistent with metric definitions.	Satisfied	KPMG Consulting reviewed the Carrier-to-Carrier Guidelines relative to the Pre-Ordering, Ordering, Provisioning, Maintenance & Repair, Network Performance, Billing, Operator Services & Databases, and General metrics and found the formula prescribed to calculate each metric was consistent with the description of what the metric was intended to measure.
PMR1-4	The metric exclusions documented in the Verizon NJ Carrier-to-Carrier Guidelines are appropriate.	Satisfied	KPMG Consulting reviewed the exclusions for the Pre-Ordering, Ordering, Provisioning, Maintenance & Repair, Network Performance, Billing, Operator Services & Databases, and General metrics in the Carrier-to-Carrier Guidelines and found that the exclusions are appropriate.

Test Reference	Evaluation Criteria	Result	Comments
PMR1-5	Verizon NJ distributed the Carrier-to-Carrier Guidelines.	Satisfied	Verizon NJ distributed the May 2000 Carrier-to-Carrier Guidelines to the NJ BPU for approval. The NJ BPU posted the approved Carrier-to-Carrier Guidelines to its website at: http://www.bpu.state.nj.us
PMR1-6	Verizon NJ included required metrics in the Carrier-to-Carrier Reports.	Satisfied	KPMG Consulting compared the Pre-Ordering, Ordering, Provisioning, Maintenance & Repair, Network Performance, Billing, Operator Services& Databases, and General metrics in the Carrier-to-Carrier Guidelines against the Carrier-to-Carrier reports and found that all of the metrics were implemented and reported as required by the NJ BPU except: ◆ PO-8-01 - % On-time – Manual Loop Qualification ◆ PO-8-02 - % On-time – Engineering Record Request ◆ BI-3-01 - % Billing Adjustments – Incl. Charges Adjusted Due to PCDs ◆ BI-3-03 - % Billing Adjustments – Excl. Charges Adjusted Due to PCDs ◆ BI-7-01 - % Completeness of Fractional Recurring Charges – Incl. PCD Delayed Charges ◆ BI-7-02 - % Completeness of Fractional Charges – Excl. PCD Delayed Charges ◆ BI-8-01 - % Completeness of Non-Recurring Charges – Incl. PCD Delayed Charges ◆ BI-8-02 - % Completeness of Non-Recurring Charges – Excl. PCD Delayed Charges The implementation date of these metrics was delayed 7 months beyond the August 1, 2000 date originally ordered by the NJ BPU. KPMG Consulting determined that the number of metrics involved (3% of the total) did not constitute a material percentage of the metrics required to be reported. The PO metrics were available in March 2001 and the BI metrics were available

Test Reference	Evaluation Criteria	Result	Comments
			in April 2001.
PMR1-7	Metric reports are made available in accordance with required distribution guidelines.	Satisfied	In July, August, October, and November 2000, Verizon NJ distributed the monthly Carrier-to-Carrier Reports between one to six days late. KPMG Consulting has verified that since that time the Carrier-to-Carrier Reports have been distributed on time.

B. Test Results: Data Collection and Storage Verification and Validation Review (PMR2)

1.0 Description

This test evaluated policies and practices for collecting and storing raw data that is unprocessed through Verizon NJ (Verizon NJ) information systems and target data necessary for the creation of performance metrics. This test relied on interviews with Verizon NJ data collection and storage experts as well as reviews of documentation.

2.0 Methodology

This section summarizes the test methodology.

2.1 Business Process Description

Verizon NJ gathers raw data on submitted transactions. This raw data either is filtered through additional systems or is used to populate carrier-to-carrier reports directly.

The systems initially included in KPMG Consulting tests were identified in the Collection and Storage of Data Verification and Validation Review (this test is PMR1 in PA) previously conducted in Verizon Pennsylvania. In those instances where different or additional systems were used to perform the same or additional metrics processing for Verizon NJ, the scope of the test was expanded to include those additional New Jersey systems.

Because of the numerous information systems involved in the processing of orders and troubles, KPMG Consulting concentrated on (i) those source systems related to unprocessed data as determined in Metrics Calculations and Reporting Verification and Validation Review (PMR3) and (ii) those systems (repositories) for each domain associated with processed data. The following table lists those sub-systems and major systems analyzed in the test.

Table 2-1: PMR2 Source Systems and Repositories

Domain	Source System(s)	Repositories
Pre-Ordering	EnView	Not Applicable
Ordering	Exchange Access Control & Tracking System (EXACT), Request Manager	Evidentiary Database, BA ISCS Rep System (BAIRS)
Provisioning	Minimal Input Service Order System (MISOS)	Service Order Database (SORD), Evidentiary Database
Maintenance and Repair	Work Force Administration/Control (WFA/C), Loop Maintenance Operations System (LMOS), Network Analysis and Measurement System (NAMS), Repair Trouble Administration System (RETAS)/Caseworker.	Network Operations Database (NORD), Evidentiary Database
Billing	Carrier Access Billing System (CABS), Customer Record Information System (CRIS), Daily Usage Feed (DUF)	Billing Repository
Network Performance	Not Applicable	Customer Network Engineering (CNE)

Pre-ordering metrics are measured with the simulation system EnView, which uses robots to generate simulated preorder queries for both retail and wholesale. EnView mimics a clerk requesting pre-order transaction information (e.g., due date availability, address validation, Customer Service Record (CSR), product and service availability, telephone number availability and reservation). The response time for each simulated EnView transaction is written to a log file.

EXACT is a mainframe system that accepts Access Service Requests (ASRs) from Competitive Local Exchange Carriers (CLECs). BAIRS is a data repository that receives a data feed from EXACT. Request Manager accepts Local Service Requests (LSRs) from CLECs.

The Evidentiary Database is an ORACLE database system that, when fed selected data fields from Ordering, Provisioning and Maintenance systems, calculates and reports metrics applicable to those domains.

MISOS is an interface system that captures the raw images of CLEC service orders in Verizon NJ, conducts basic edits on the account and order data, and passes the edited order on to subsequent provisioning systems. MISOS mainframe operations are outsourced from Verizon NJ to a UNISYS-operated Data Center.

SORD is a database that receives data from MISOS and other systems and is used in the creation of Provisioning metric results. LMOS collects trouble information on Plain Old Telephone Service (POTS) lines while WFA/C collects similar information for troubles on trunks. NAMS collects trouble information for Special access lines. NORD is a database that receives data from LMOS and other systems and is used in the creation of Maintenance and Repair metric results. RETAS is an interface used by CLECs to submit trouble information. Caseworker is a similar trouble reporting system used on the retail side.

CABS and CRIS track billing data and receive usage, remittance and service order data feeds. CABS is used mainly for ASR data. DUF receives toll and switch data feeds and collects usage information. The Billing Repository is a data warehouse fed by CRIS and CABS. It calculates and reports billing metrics to CLECs.

CNE is a database used to track information regarding collocation applications and completions.

2.2 Scenarios

Scenarios were not applicable to this test.

2.3 Test Targets & Measures

The test targets were the data processing and data retention processes and included reviews of the following sub-processes:

- Collection policies and procedures for CLEC and retail data
- Identification of collection points
- Existence of collection tools
- Internal controls
- Storage policies and procedures for CLEC and retail data
- Identification of storage sites
- Existence of storage tools

2.4 Data Sources

The sources of data for this test included the following:

- Summaries of interviews conducted by KPMG Consulting
- Documentation (electronic or paper copies) related to various systems: technical guides, data flow diagrams, user guides, etc.
- Work papers from the Massachusetts and Pennsylvania tests

2.4.1 Data Generation/Volumes

This test did not rely on data generation or volume testing.

2.5 Evaluation Methods

The evaluation of the data collection and storage processes consisted of an investigation of the information systems across the Pre-Ordering, Ordering, Provisioning, Maintenance and Repair, Network Performance, and Billing domains. Based upon the unprocessed records and logs obtained from Verizon in the Metrics Replication (this test is PMR5 in PA) test conducted in Pennsylvania, it was determined that the subsystems associated with these unprocessed records/logs represented collection points of data. The corresponding New Jersey subsystems were validated as the equivalent data collection points for Verizon NJ.

- Where different or additional systems from those in Pennsylvania were applicable to Verizon NJ OSS operations, those systems were added to the scope of the NJ test. Where systems were used in Verizon PA operations but not in New Jersey, those OSS systems were excluded from the scope of the Verizon NJ test. The following systems were added to the New Jersey PMR2 test but were not included in the scope of the earlier Verizon-PA test: Minimal Service Order System (MISOS), Evidentiary Database, Billing Repository, and the Network Analysis and Measurement System (NAMS)
- The following systems were included in the Verizon PA test but were excluded from the New Jersey PMR2 test*:* Service Order Image Files (So_SIMS/So_MIMS) and the Service Order Processor (SOP). These Verizon-PA systems collectively perform the same function as that performed by MISOS in New Jersey.

To determine that data are collected properly, those major database and information systems used in the calculation of metrics were analyzed. Finally, the storage processes for data from unprocessed and processed data collection points were also analyzed.

KPMG Consulting conducted interviews with Verizon NJ personnel knowledgeable in the processes and procedures for data collection and storage of these systems and subsystems. KPMG Consulting also reviewed documentation that supported these processes and procedures.

2.6 Analysis Methods

The Data Collection and Storage Verification and Validation Review (PMR2) included a checklist of evaluation criteria originally developed by the Test Manager during the initial phase of the Verizon-PA OSS Evaluation. The order of the State of New Jersey Board of Public Utilities dated May 25, 2000 required that the OSS Testing performance measures adopted in December 1999 by the State of Pennsylvania become the basis of the subsequent New Jersey standards. Accordingly, the KPMG Consulting evaluation criteria developed for the Verizon-PA Data Collection and Storage Verification and Validation (PMR2) test became the basis for the equivalent criteria in Verizon NJ with additions and modifications as required. These evaluation criteria provided the framework of norms, standards, and guidelines for the Data Collection and Storage Verification and Validation Review (PMR2).

This test essentially evaluates data collection and storage procedures and whether or not these procedures are documented. Adherence to policies and procedures is evaluated as part of tests that relate to replication Metrics Calculations and Reporting Verification and Validation review (PMR3) and integrity Metrics Data Filtering and Integrity Verification and Validation Review (PMR4). These tests analyze the data for accuracy and completeness.

The data collected were analyzed employing the evaluation criteria referenced in Table 2-2 through 2-7 below.

3.0 Results

This section identifies the evaluation criteria and test results.

3.1 Results Summary

The results of this test are presented in the tables below.

Table 2-2: PMR2 Evaluation Criteria and Results: Pre-Ordering

Test Reference	Evaluation Criteria	Result	Comments
PMR2-1-A	The roles and responsibilities for data collectors involved in manual processes are defined and documented.	Satisfied	Verizon NJ confirmed that there is no manual collection for the EnView system. It uses an automated data collection process. EnView Robot Documentation describes the functions of robots that are used for automated data collection.
PMR2-2-A	The policies and procedures for data collection are defined and documented.	Satisfied	EnView collects data from ECXpert, downstream Operations Support Systems, MISOS and Billing Output Specifications Standards (BOS). EnView data is written to a log file every day. EnView Robot Documentation describes the procedures for automated data collection.

Test Reference	Evaluation Criteria	Result	Comments
PMR2-3-A	Technical guides describing data collected are available.	Satisfied	The EnView Reports Admin Guide, which is available with all workstations, describes data collected.
PMR2-4-A	Verizon NJ is able to identify the exact points of data collection.	Satisfied	Verizon NJ confirmed that EnView pulls data from ECXpert, SOP, BOS, and downstream Operations support systems. Data are written to a log file every day. Verizon NJ provided samples of EnView log files for the months of January through May 2001.
PMR2-5-A	Verizon NJ has adequate capacity to collect data.	Satisfied	The four EnView robots (two at the Freehold Data Center and two at Blue Hill) have a total of 8 Gigabytes (Gb) of hard drive space to collect data. Only a fraction of the available EnView robot capacity is currently required to collect data.
PMR2-6-A	Verizon NJ has a defined plan for future capacity to collect data.	Satisfied	Verizon NJ confirmed that each EnView robot has 2 Gb of disk space for the purposes of data collection, an amount that far exceeds actual space needed. Additional capacity would be acquired if needed through Verizon NJ's capital budgeting process.
PMR2-7A	Verizon NJ has defined and documented error controls for use during data collection.	Satisfied	KPMG Consulting reviewed the processes used by the EnView support staff in case of data collection errors. When an error occurs during data collection, EnView monitors display visual and audible warnings. EnView Support Operating Procedure describes the error detection and control mechanisms.
PMR2-8-A	Verizon NJ has a documented security process for data collection.	Satisfied	Only the EnView support group has access to the system. The robots in the data centers have no screens and their keyboards are locked.
PMR2-9-A	The roles and responsibilities for data storage personnel involved in manual processes are defined and documented.	Satisfied	The EnView system uses a manual data storage process in accordance with a fixed schedule. EnView Systems Administration Guide describes the responsibilities for data storage.

Test Reference	Evaluation Criteria	Result	Comments
PMR2-10-A	The policies and procedures for data storage are defined and documented.	Satisfied	In interviews, Verizon NJ SMEs provided a description of the data storage procedures. EnView monthly backups are made to CD-ROM and stored in a data library per an established schedule. . KPMG Consulting requested and reviewed the EnView Systems Administration Guide, confirming that the data storage procedures described above are properly documented
PMR2-11A	Technical guides describing data storage are available.	Satisfied	The EnView Reports Administration Guide provides a technical description of data storage.
PMR2-12A	Verizon NJ is able to identify the exact points of data storage.	Satisfied	KPMG Consulting interviewed Verizon NJ SMEs and determined that EnView data is stored on CD-ROM. Monthly backup data is maintained at a locked location in Boston, MA. KPMG Consulting requested and reviewed the EnView log file data for January 2001.
PMR2-13A	Verizon NJ has capacity to store data.	Satisfied	EnView servers can store three years of data on-line.
PMR2-14A	Verizon NJ has a defined plan for future capacity to store data	Satisfied	Since backup is made to CD-ROM, there is virtually unlimited space for EnView data storage, making a capacity plan unnecessary.
PMR2-15A	Verizon NJ makes scheduled back-ups of critical files.	Satisfied	Verizon NJ SMEs provided the backup schedules for EnView. Data is backed up daily (incremental) and monthly (full). KPMG Consulting requested and reviewed the EnView log file data from Verizon NJ's backup files for January through May 2001.
PMR2-16A	Verizon NJ has a documented security process for data storage.	Satisfied	Verizon NJ has documented security procedures to safeguard data residing on the server as well as a requirement to perform monthly CD-ROM backup.

Table 2-3: PMR2 Evaluation Criteria and Results: Ordering

Test Reference	Evaluation Criteria	Result	Comments
PMR2-1-B	The roles and responsibilities for data collectors involved in manual processes are defined and documented.	Satisfied	Written documentation defining the roles and responsibilities for data collection for EXACT/BAIRS, Request Manager and the Evidentiary Database was presented during the test. BAIRS and Request Manager use an automated data collection process. The EXACT system receives manual inputs from representatives for mailed and faxed orders. This process follows a fixed data collection schedule between 5:15AM and midnight, Monday through Friday.
PMR2-2-B	The policies and procedures for data collection are defined and documented.	Satisfied	In interviews, Verizon NJ SMEs provided the descriptions of the data collection procedures for EXACT, BAIRS, Request Manager, and Evidentiary Database. EXACT collects data from file transfers, mail or fax. BAIRS collects data via a batch input process. Request Manager collects data via a TCP/IP connection. The Evidentiary Database obtains order information from EXACT via BAIRS through a monthly batch input process. KPMG Consulting requested and reviewed documentation on data collection processes for the above systems, confirming that the data collection procedures described above are properly documented.
PMR2-3-B	Technical guides describing data collected are available.	Satisfied	Verizon NJ provided Technical documentation for EXACT/BAIRS and Request Manager. Technical documentation for Request Manager is available on the TIS website www.bell-atl.com/tis. KPMG requested and reviewed BAIRS technical documentation on October 18, 2000.

Test Reference	Evaluation Criteria	Result	Comments
PMR2-4-B	Verizon NJ is able to identify the exact points of data collection.	Satisfied	In an on-site interview, Verizon NJ SMEs described the points of data collection for EXACT, BAIRS, Request Manager, and the Evidentiary Database. EXACT collects data from exchange carriers via a file transfer system (MDM) and by fax and mail. BAIRS collects data via a batch feed from EXACT, CABS, CBIC, and CAS. Request Manager data collection is through a TCP/IP connection to the backend of OSS. The Evidentiary Database data collection is managed by a UNIX-based system administrator. Verizon NJ identified the various systems that feed data to the Evidentiary Database. KPMG Consulting requested and reviewed samples of unprocessed and processed data for KPMG CLEC and retail orders for the month of September 2000.
PMR2-5-B	Verizon NJ has adequate capacity to collect data.	Satisfied	Data is collected for EXACT and BAIRS in a shared pooling environment, which dynamically allocates more data collection space when necessary. The Evidentiary Database shares processing capacity at the Burlington Data Center. In an on-site interview with KPMG Consulting, Verizon NJ SMEs indicated that the Verizon Data Center Network and Distributed Resources (VZ-DCNDR) organization monitors the systems data collection capacity to ensure that it is adequate. KPMG Consulting requested and reviewed a documented “high availability program” plan that describes monitoring of resource consumption and quarterly capacity planning.

Test Reference	Evaluation Criteria	Result	Comments
PMR2-6-B	Verizon NJ has a defined plan for future capacity to collect data.	Satisfied	EXACT/BAIRS, Request Manager and the Evidentiary Database are managed by the Verizon NJ Data Center Network & Distributed Resources organization. That management includes a "high-availability program" with quarterly capacity planning.
PMR2-7-B	Verizon NJ has defined and documented error controls for use during data collection.	Satisfied	EXACT error message documentation is available online at the Telecom Industry Services (TIS) website. Request Manager can detect errors in collected data and return them to the CLEC for correction. The Evidentiary Database File Administrator performs automatic validation of input.
PMR2-8-B	Verizon NJ has a documented security process for data collection.	Satisfied	EXACT/BAIRS, Request Manager and the Evidentiary Database are managed by the Verizon NJ Data Center Network & Distributed Resources organization. That management includes a standard IBM RACF controlled access to data sets, on-line transactions and systems resources. In an interview with KPMG Consulting, Verizon NJ SMEs indicated that EXACT and BAIRS are audited annually. KPMG Consulting requested and reviewed guidelines for security audits. Request Manager is reviewed internally for security controls. At the time of the test, no audit had yet been conducted of the Evidentiary Database, which had been operational for less than one year at the time of the interview.
PMR2-9-B	The roles and responsibilities for data storage personnel involved in manual processes are defined and documented.	Satisfied	Written documentation defining the roles and responsibilities for data storage for EXACT/BAIRS, Request Manager and the Evidentiary Database were presented during the test.
PMR2-10-B	The policies and procedures of data storage are defined and documented.	Satisfied	The same set of documents govern data storage procedures for EXACT/BAIRS and Request Manager.

Test Reference	Evaluation Criteria	Result	Comments
PMR2-11-B	Technical guides describing data storage are available.	Satisfied	Verizon NJ provided a sample of the BAIRS Master file description.
PMR2-12-B	Verizon NJ is able to identify the exact points of data storage.	Satisfied	In an on-site interview, Verizon NJ SMEs described the points of data storage for EXACT, BAIRS, Request Manager, and the Evidentiary Database: Data from EXACT and BAIRS are backed up to disks or tapes within data centers. Data from Request Manager are stored on UNIX servers. The Evidentiary Database is run in the Verizon Data Center at Burlington, MA with back up processing at Blue Hill, NY. To validate the archival process, KPMG Consulting requested and reviewed both unprocessed and processed records for September 2000 from the archives.
PMR2-13-B	Verizon NJ has capacity to store data.	Satisfied	Since data from EXACT and BAIRS are backed up to disks or tapes, there is virtually unlimited space for data storage. Request Manager data storage is tracked daily and monthly via its Central Processing Unit (CPU) storage capacity. The Evidentiary Database is allocated 20 Gb of storage space, of which 16 were still available after approximately one year of operations (October 2000).
PMR2-14-B	Verizon NJ has a defined plan for future capacity to store data.	Satisfied	EXACT/BAIRS, Request Manager and Evidentiary Database are managed by the Verizon NJ Data Center Network & Distributed Resources organization. Management includes a "high-availability program" with regular monitoring of resource consumption and quarterly capacity planning.

Test Reference	Evaluation Criteria	Result	Comments
PMR2-15-B	Verizon NJ makes scheduled back-ups of critical files.	Satisfied	Verizon NJ SMEs provided the backup schedules for EXACT, BAIRS, Request Manager, and the Evidentiary Database: Backup data for EXACT/BAIRS is written to tape and stored off site. EXACT data is backed up on a weekly basis, while BAIRS data is backed up periodically between batch jobs. Request Manager is backed up daily and files are stored on password protected servers at Freehold NJ and Fairland MD data centers. Evidentiary Database source data is archived as part of the periodic standard file management process. To verify the backup process, KPMG Consulting requested and reviewed the archived data from Verizon NJ's backup files for the month of September 2000.
PMR2-16-B	Verizon NJ has a documented security process for data storage.	Satisfied	In an on-site interview, Verizon NJ SMEs indicated that EXACT and BAIRS are audited annually. Request Manager is reviewed internally for security controls. KPMG Consulting requested and reviewed internal audit guidelines for these systems.

Table 2-4: PMR2 Evaluation Criteria and Results: Provisioning

Test Reference	Evaluation Criteria	Result	Comments
PMR2-1-C	The roles and responsibilities for data collectors involved in manual processes are defined and documented.	Satisfied	Verizon NJ SMEs described the data collection processes for SORD and MISOS: SORD uses an automated data collection process. Service representatives manually enter some data for MISOS. KPMG Consulting requested and reviewed documentation (Provisioning Reference Manual, MISOS Functional Description) from Verizon NJ that defined the roles and responsibilities for these systems.
PMR2-2-C	The policies and procedures for data collection are defined and documented.	Satisfied	MISOS and SORD data collection policies are included in general design documents provided by Verizon NJ.
PMR2-3-C	Technical guides describing data collected are available.	Satisfied	MISOS and SORD technical guides to data collection are included in general design documents provided by Verizon NJ.
PMR2-4-C	Verizon NJ is able to identify the exact points of data collection.	Satisfied	In an interview with KPMG Consulting, Verizon NJ SMEs identified the data collection points for MISOS and SORD: MISOS collects order data from EDI, Web GUI, Request Manager, request Broker, and the Common Service Order Processor (CSOP). SORD primarily collects data from MISOS. KPMG Consulting requested and reviewed both raw and processed data from June 2000 for KPMG CLEC and retail customers.
PMR2-5-C	Verizon NJ has adequate capacity to collect data.	Satisfied	SORD requires approximately 1.5 Gb per month. Verizon installed a new server for SORD to accommodate future data collection needs. MISOS operational processing is outsourced to a UNISYS data center in Eagan, MN. A Service Agreement with UNISYS governs the space available to the system.

Test Reference	Evaluation Criteria	Result	Comments
PMR2-6-C	Verizon NJ has a defined plan for future capacity to collect data.	Satisfied	MISOS processing is outsourced to UNISYS. Service level agreements with Verizon control the level of data collection capacity. SORD is managed by the Verizon NJ Data Center Network & Distributed Resources organization. That management includes a "high-availability program" with regular monitoring of resource consumption and quarterly capacity planning.
PMR2-7-C	Verizon NJ has defined and documented error controls for use during data collection.	Satisfied	Data is collected mechanically from MISOS into SORD via COBOL programs. Manipulation of the data does not occur in this process, thereby eliminating the introduction of errors.
PMR2-8-C	Verizon NJ has a documented security process for data collection.	Satisfied	MISOS processing is outsourced to UNISYS. Service level agreements with Verizon control the level of data security. SORD is managed by the Verizon NJ Data Center Network & Distributed Resources organization. That management includes a standard IBM RACF controlled access to data sets, on-line transactions and systems resources.
PMR2-9-C	The roles and responsibilities for data storage personnel involved in manual processes are defined and documented.	Satisfied	SORD data storage responsibilities are documented in the SORD Team Reference Manual provided by Verizon NJ. MISOS data storage responsibilities are governed by the service level agreement with UNISYS.
PMR2-10-C	The policies and procedures for data storage are defined and documented.	Satisfied	Verizon NJ has documented procedures to store data for SORD. MISOS data storage policies are governed by Service Agreement with UNISYS Data Center. SORD data is stored both on a mainframe disk and on a data center server.
PMR2-11-C	Technical guides describing data storage are available.	Satisfied	The MISOS USD Manual and the SORD Team Reference Manual each include a technical guide to data storage for these systems.

Test Reference	Evaluation Criteria	Result	Comments
PMR2-12-C	Verizon NJ is able to identify the exact points of data storage.	Satisfied	Verizon NJ SMEs identified the data storage points for MISOS and SORD: MISOS data is stored on disk at the UNISYS Data Center, Eagan, MN. SORD back-ups are managed by Verizon's Operations Group and stored both on a mainframe disk and on a data center server. KPMG Consulting requested and reviewed the stored data from the archives for the month of June 2000.
PMR2-13-C	Verizon NJ has adequate capacity to store data.	Satisfied	In an interview with KPMG Consulting, Verizon NJ SMEs indicated that MISOS data is stored on disk at the UNISYS Data Center. Verizon monitors available capacity weekly and purchases more space as required. SORD back-ups reside on a data center server. KPMG Consulting requested and reviewed space management specifications for SORD.
PMR2-14-C	Verizon NJ has a defined plan for future capacity to store data.	Satisfied	SORD is managed by the Verizon NJ Data Center Network & Distributed Resources organization. That management includes a "high-availability program" with regular monitoring of resource consumption and quarterly capacity planning.
PMR2-15-C	Verizon NJ makes scheduled back-ups of critical files.	Satisfied	Verizon NJ SMEs indicated that data is collected mechanically from MISOS into SORD via COBOL programs. The Operations group maintains backups of SORD. KPMG Consulting requested and reviewed backup schedules for SORD. To verify the backup process, KPMG Consulting requested and reviewed the archived data for the month of June 2000.
PMR2-16-C	Verizon NJ has a documented security process for data storage.	Satisfied	Verizon NJ has security measures to limit access to SORD back-ups. MISOS backup files are protected and can be read but not written on.

Table 2-5: PMR2 Evaluation Criteria and Results: Maintenance and Repair

Test Reference	Evaluation Criteria	Result	Comments
PMR2-1-D	The roles and responsibilities for data collectors involved in manual processes are defined and documented.	Satisfied	WFA/C, LMOS, RETAS, and Caseworker receive manual data inputs. Staff roles and responsibilities for data collection were defined by Verizon NJ in an interview conducted by KPMG Consulting. NORD and NAMS use automated data collection processes.
PMR2-2-D	The policies and procedures for data collection are defined and documented.	Satisfied	KPMG Consulting requested and reviewed the System Administrators Guides and related documentation that describe the data collection steps for WFA/C, LMOS, RETAS, CaseWorker, NORD and NAMS.
PMR2-3-D	Technical guides describing data collected are available.	Satisfied	Data collection technical guides were made available for LMOS, NORD and RETAS/Caseworker and NAMS.
PMR2-4-D	Verizon NJ is able to identify the exact points of data collection.	Satisfied	In an on site interview, Verizon NJ SMEs identified the points of data collection as follows: WFA/DI and WFA/DO feed into WFA/C. CRIS systems and service order systems feed into LMOS. Trouble reporting data are fed into RETAS through the Web and FTP. Verizon NJ representatives enter customer trouble information into Caseworker. M&R Specials data is fed into NAMS and WFA-/C systems. KPMG Consulting requested and reviewed Maintenance and Repair customer troubles reports for POTS, Specials, and Trunks for the month of September 2000.

Test Reference	Evaluation Criteria	Result	Comments
PMR2-5-D	Verizon NJ has adequate capacity to collect data.	Satisfied	In an on site interview with KPMG Consulting, Verizon NJ SMEs indicated that: WFA/C, NORD, RETAS/Caseworker maintain free space to collect data. Line record information is tracked for LMOS on a monthly basis. When a utilization threshold is reached, a warning indicator is triggered. NAMS processing capacity is monitored on a daily and weekly basis. KPMG Consulting requested and reviewed a documented "high availability program" plan that describes monitoring of resource consumption and quarterly capacity planning.
PMR2-6-D	Verizon NJ has a defined plan for future capacity to collect data.	Satisfied	WFA/C, LMOS, RETAS/Caseworker, NORD and NAMS are managed by the Verizon NJ Data Center Network & Distributed Resources organization. That management includes a "high-availability program" with regular monitoring of resource consumption and quarterly capacity planning.
PMR2-7-D	Verizon NJ has defined and documented error controls for use during data collection.	Satisfied	In an interview with KPMG Consulting, Verizon NJ SMEs described the error control mechanisms as follows: WFA/C prohibits incorrect user-input of certain fields. LMOS dispatch code checks and cost code checks are automated. As a data integrity check, data in NORD are compared with paper versions of the same data. RETAS verifies that required fields are populated. For Caseworker, the GUI only offers valid codes to a Verizon representative. NAMS performs a validation to ensure that input files are read completely, but individual records are validated in the feeder systems, not in NAMS.

Test Reference	Evaluation Criteria	Result	Comments
PMR2-8-D	Verizon NJ has a documented security process for data collected.	Satisfied	WFA/C, LMOS, NORD, RETAS/Caseworker and NAMS are managed by the Verizon NJ Data Center Network & Distributed Resources organization. That management includes a standard IBM RACF controlled access to data sets, on-line transactions and systems resources.
PMR2-9-D	The roles and responsibilities for data storage personnel involved in manual processes are defined and documented.	Satisfied	Documentation (technical and systems administration guides) was provided on roles and responsibilities of personnel involved in non-automated data storage activities.
PMR2-10-D	The policies and procedures for data storage are defined and documented.	Satisfied	In an interview with KPMG Consulting, Verizon NJ SMEs described the procedures for storage: Technical and Systems Administration Guides describe the procedures for data storage. WFA/C data is duplicated online automatically. LMOS data is stored daily, weekly on tapes and sent off-site to storage centers. NORD data is backed up to tapes weekly. RETAS and Caseworker data is duplicated and sent to a data center. NAMS data is backed up to tape at the Blue Hill Data Center. On request from KPMG Consulting, Verizon NJ was able to provide the Maintenance and Repair customer reports from the archives for POTS, Specials, and Trunks for the month of September 2000.
PMR2-11-D	Technical guides describing data storage are available.	Satisfied	Data dictionaries and/or technical reference manuals are available for WFA/C, LMOS, NORD and RETAS/Caseworker. NAMS data backup and storage are carried out in the Verizon data centers using standard IBM utilities.
PMR2-12-D	Verizon NJ is able to identify the exact points of data storage.	Satisfied	LMOS, NORD, Caseworker and NAMS data is backed up to tape. RETAS and WFA/C data is duplicated on-line.

Test Reference	Evaluation Criteria	Result	Comments
PMR-2-13-D	Verizon NJ has capacity to store data.	Satisfied	KPMG Consulting interviewed Verizon NJ SMEs and determined that since LMOS, NORD, Caseworker and NAMS back-up data to tapes, storage capacity is virtually unlimited. RETAS and WFA/C back-up data is maintained and tracked in data centers. KPMG Consulting requested and reviewed a documented "high availability program" plan that describes monitoring of resource consumption and quarterly capacity planning.
PMR2-14-D	Verizon NJ has a defined plan for future capacity to store data.	Satisfied	WFA/C, LMOS, RETAS/Caseworker, NORD and NAMS are managed by the Verizon NJ Data Center Network & Distributed Resources organization. That management includes a "high-availability program" with regular monitoring of resource consumption and quarterly capacity planning.
PMR2-15-D	Verizon NJ makes scheduled back-ups of critical files.	Satisfied	KPMG Consulting interviewed Verizon NJ SMEs and determined that data for WFA/C and RETAS is duplicated continuously, LMOS data is backed up daily and NORD data is backed up on a weekly basis. Backup data for WFA/C, LMOS, NORD, RETAS/Caseworker and NAMS are stored offsite in secure locations. KPMG Consulting requested and reviewed the raw and processed data for customer trouble reports from the archives for the month of September 2000.
PMR2-16-D	Verizon NJ has a documented security process for data storage.	Satisfied	Verizon NJ has security measures to limit access of WFA/C, LMOS, NORD, RETAS/Caseworker and NAMS data.

Table 2-6: PMR2 Evaluation Criteria and Results: Billing

Test Reference	Evaluation Criteria	Result	Comments
PMR2-1-E	The roles and responsibilities for data collectors involved in manual processes are defined and documented.	Satisfied	Verizon NJ confirmed that there are no manual processes in data collection. CABS, CRIS, DUF and Billing Repository use automated data collection processes.
PMR2-2-E	The policies and procedures for data collection are defined and documented.	Satisfied	Verizon NJ supplied documentation for policies and procedures for Billing Systems.
PMR2-3-E	Technical guides describing data collected are available.	Satisfied	Technical documentation related to CRIS was made available during the test. Technical documentation for CABS and DUF was made available during the test. A technical guide to Billing Repository is documented in TGS Systems Development Policy Manual
PMR2-4-E	Verizon NJ is able to identify the exact points of data collection.	Satisfied	In an on-site interview with KPMG Consulting, Verizon NJ SMEs identified the points of data collection: CRIS and ASOP feed data into CABS. MISOS and Usage systems feed into CRIS. The Payment Remittance Center feeds both carrier data and Verizon NJ data into CRIS. There are two basic feeds for DUF: toll and switch system data. The CRIS system automatically feeds Billing Repository once per bill period. CABS automatically feeds Billing Repository monthly. KPMG Consulting requested and reviewed both raw and processed bill data for the month of September 2000. KPMG Consulting was able to track the records from an unprocessed to processed state.
PMR2-5-E	Verizon NJ has adequate capacity to collect data.	Satisfied	Data collection capacity is monitored for CABS, CRIS, DUF and Billing Repository by the Data Center Network & Distributed Resources (DCNDR) organization. That management includes a “high-availability program” with regular monitoring of resource consumption and quarterly capacity planning.

Test Reference	Evaluation Criteria	Result	Comments
PMR2-6-E	Verizon NJ has a defined plan for future capacity to collect data.	Satisfied	DCNDR procedures include a quarterly analysis of future data collection capacity requirements.
PMR2-7-E	Verizon NJ has defined and documented error controls for use during data collection.	Satisfied	Documentation of error checking mechanisms was provided for CABS, CRIS and DUF.
PMR2-8-E	Verizon NJ has a documented security process for data collection.	Satisfied	CABS, CRIS and DUF are managed by the Verizon NJ Data Center Network & Distributed Resources organization. That management includes a standard IBM RACF controlled access to data sets, on-line transactions and systems resources.
PMR2-9-E	The roles and responsibilities for data storage personnel involved in manual processes are defined and documented.	Satisfied	Verizon NJ supplied documentation for roles and responsibilities for Billing Systems.
PMR2-10-E	The policies and procedures for data storage are defined and documented.	Satisfied	Verizon NJ supplied documentation that defined and documented data storage policies and procedures for Billing systems.
PMR2-11-E	Technical guides describing data storage are available.	Satisfied	Technical documentation for CRIS was made available during the test. Technical documentation for CABS and DUF data storage were made available during the test. A technical guide to Billing Repository is documented in TGS Systems Development Policy Manual
PMR2-12-E	Verizon NJ is able to identify the exact points of data storage.	Satisfied	In an interview, Verizon NJ described the data storage points for various systems: Data from CABS is stored on tapes. Data from CRIS is stored online for one year, and then sent to off-site retention. Data from DUF is stored on-site in two separate computers in a data center. Billing Repository data is stored on DB2 tables at the Burlington Data Center. To verify the backup process, KPMG Consulting requested and reviewed both raw and processed data for the month of September 2000.

Test Reference	Evaluation Criteria	Result	Comments
PMR2-13-E	Verizon NJ has capacity to store data.	Satisfied	KPMG Consulting interviewed Verizon NJ SMEs and determined that since back-up data for CABS is on tape, storage capacity is virtually unlimited. CRIS data is stored online for one year and then sent offsite for storage on tapes. DUF data is stored in two different computers at Freehold NJ data center and archived to tapes. Billing Repository allocated 60 Gb of storage, using only 16 Gb at time of test. CABS, CRIS, DUF and Billing Repository data are monitored by Verizon Data Center management to ensure that storage requirements are met. KPMG Consulting requested and reviewed a documented "high availability program" plan that describes monitoring of resource consumption and quarterly capacity planning.
PMR2-14-E	Verizon NJ has a defined plan for future capacity to store data.	Satisfied	CABS, CRIS and DUF are managed by the Verizon NJ Data Center Network & Distributed Resources organization. That management includes a "high-availability program" with regular monitoring of resource consumption and quarterly capacity planning.
PMR2-15-E	Verizon NJ makes scheduled back-ups of critical files.	Satisfied	KPMG Consulting interviewed Verizon NJ SMEs and determined that backups for CABS, CRIS and DUF are performed daily. For Billing Repository, backups are performed on a periodic basis. Backup tapes for CABS and CRIS are stored offsite. Backup data for DUF is stored on two separate computers at the Freehold data center. Billing Repository backup data is stored at the Burlington data center. KPMG Consulting requested and reviewed backup schedules for the above systems.
PMR2-16-E	Verizon NJ has a documented security process for data storage.	Satisfied	Verizon NJ has security measures to limit access of CABS, CRIS, DUF and Billing Repository data.

Table 2-7: PMR2 Evaluation Criteria and Results: Network Performance

Test Reference	Evaluation Criteria	Result	Comments
PMR2-1-F	The roles and responsibilities for data collectors involved in manual processes are defined and documented.	Satisfied	Verizon NJ SMEs described the roles and responsibilities of the data collectors. Local Collocation Coordinators (LCCs) input data manually. This occurs on a daily basis from 8 a.m. to 6 p.m. Monday through Friday, by close of business (COB) on the date of receipt of the collocation application (based on the actual implementation of the collocation arrangement). CBS_CNE_Data_Storage.doc describes the roles and responsibilities for data collectors.
PMR2-2-F	The policies and procedures for data collection are defined and documented.	Satisfied	Policies and Procedures for CNE data collection are included in the Monthly Co-location Performance Data Extraction & Report Generating document provided by Verizon NJ.
PMR2-3-F	Technical guides describing data collected are available.	Satisfied	KPMG Consulting requested and reviewed the CNE data dictionary described in CBS_CNE_Data_Storage.doc.
PMR2-4-F	Verizon NJ is able to identify the exact points of data collection.	Satisfied	KPMG Consulting interviewed Verizon NJ SMEs and determined that paper records are compiled and input into the CNE system by the Applications Processing Group in Wholesale Network Services (WNS). On request from KPMG Consulting, Verizon NJ was able to provide September 2000 Network Performance (NP-2) records for KPMG CLEC.
PMR-2-5-F	Verizon NJ has adequate capacity to collect data.	Satisfied	KPMG Consulting requested and reviewed the specification sheet of available disk space. Based on current capacity utilization and usage needs, the current capacity was deemed adequate.
PMR2-6-F	Verizon NJ has a defined plan for future capacity to collect data.	Satisfied	KPMG Consulting requested and reviewed the specification sheet of available disk space. Based on capacity utilization and usage needs, the current capacity was deemed adequate for future requirements as well. CBS_CNE_Data_Storage.doc describes plans for future capacity planning.

Test Reference	Evaluation Criteria	Result	Comments
PMR2-7-F	Verizon NJ has defined and documented error controls for use during data collection.	Satisfied	In an interview, Verizon NJ SMEs indicated that Verizon has internal controls to check the accuracy and reasonableness of data extracted for both internal and external reporting purposes. In addition to a sanity check, missing data queries are run.
PMR2-8-F	Verizon NJ has a documented security process for data collection.	Satisfied	Access is permitted to authorized Verizon NJ employees in both the WNS and CNE groups.
PMR2-9-F	The roles and responsibilities for data storage personnel involved in manual processes are defined and documented.	Satisfied	In an on site interview with KPMG Consulting, Verizon NJ SMEs indicated that there are no non-automated data storage processes in the CNE system. Customer Network Engineering (CNE) data is backed-up weekly to tape. KPMG Consulting requested and reviewed the Network Performance (NP-2) records for the month of September 2000 from the archives.
PMR2-10-F	The policies and procedures for data storage are defined and documented.	Satisfied	Policies and Procedures for CNE data storage are included in the Monthly Co-location Performance Data Extraction & Report Generating document provided by Verizon NJ.
PMR2-11-F	Technical guides describing data storage are available.	Satisfied	KPMG Consulting requested and reviewed the CNE data dictionary described in CBS_CNE_Data_Storage.doc
PMR2-12-F	Verizon NJ is able to identify the exact points of data storage.	Satisfied	In an on site interview with KPMG Consulting, Verizon NJ SMEs indicated that a CNE network administrator runs the tape backup procedure and delivers the most recent Monday tape to an off-site location. Other tapes are stored at a data center. KPMG Consulting requested and reviewed the Network Performance (NP-2) records for September 2000 from the archives for specified months.
PMR2-13-F	Verizon NJ has capacity to store data.	Satisfied	Verizon NJ personnel store CNE data on tape in a secured location.

Test Reference	Evaluation Criteria	Result	Comments
PMR2-14-F	Verizon NJ has a defined plan for future capacity to store data.	Satisfied	Tape back-up procedure allows for virtually unlimited storage of CNE data.
PMR2-15-F	Verizon NJ makes scheduled back-ups of critical files.	Satisfied	In an on site interview with KPMG Consulting, Verizon NJ SMEs indicated that CNE data is backed up on a weekly basis and the back-up tapes are stored in a secure, off site location. KPMG Consulting requested and reviewed documentation for backup procedures.
PMR2-16-F	Verizon NJ has a documented security process for data storage.	Satisfied	To safeguard security, there is no direct access to the backups from either the CNE or WNS groups.

C. Test Results: Metrics Calculations and Reporting Verification and Validation Review (PMR3)

1.0 Description

This test evaluated the processes used to calculate and report performance metrics and retail analogs. The test relied on re-calculating CLEC metrics and retail analogs and reconciling discrepancies to verify and validate the production of metrics values. The test used both retrFMCctive data and data collected by KPMG Consulting and Verizon New Jersey (Verizon NJ) from the execution of transactions. This test also analyzed the consistency between the definitions documentation and the procedures used for calculating metrics. The test relied on checklists, document reviews, inspections and computer programming.

2.0 Methodology

This section summarizes the test methodology.

2.1 Business Process Description

Verizon NJ produces a monthly Carrier-to-Carrier Report based on the Carrier-to-Carrier Guidelines. Please see Metrics Standards and Definitions Documentation Verification and Validation Review (PMR1) for an overview of these Carrier-to-Carrier Guidelines. The Carrier-to-Carrier Reports contain averages, percentages, observation counts, differences, standard deviations, sampling errors, and z-scores.

2.2 Scenarios

Scenarios were not applicable to this test.

2.3 Test Targets & Measures

The test target was the replication of metric values, including evaluation of the accuracy of metrics calculations and reports, and the documentation of related processes.

2.4 Data Sources

The sources of data for this test include New Jersey Carrier-to-Carrier Guidelines, orders issued by the State of New Jersey Board of Public Utilities (NJ BPU), and monthly Verizon NJ Carrier-to-Carrier Reports.

2.4.1 Data Generation/Volumes

This test did not rely on data generation or volume testing.

2.5 Evaluation Methods

KPMG Consulting created programs/code to replicate the values on the Carrier-to-Carrier Reports. The result of this analysis included a quantitative evaluation to determine if the values produced by KPMG Consulting matched the values in the Carrier-to-Carrier Reports. KPMG Consulting used the May 2001 CLEC Aggregate Carrier-to-Carrier Reports as the baseline for this analysis.

Based on the Carrier-to-Carrier Reports, data, and algorithms, KPMG Consulting verified that the metric values were accurate and in accordance with the Carrier-to-Carrier Guidelines.

KPMG Consulting also verified the accuracy of the May 2001 CLEC Aggregate Carrier-to-Carrier Reports. KPMG Consulting determined if discrepancies identified during replication demonstrated inaccuracies on the May 2001 CLEC Aggregate Carrier-to-Carrier Reports.

2.6 Analysis Methods

The Metrics Calculations and Reporting Verification and Validation Review (PMR3) included a checklist of evaluation criteria developed by the Test Manager during the initial phase of the Verizon NJ OSS Evaluation. These evaluation criteria provided the framework of norms, standards, and guidelines for this review.

The data collected were analyzed employing the evaluation criteria referenced in Tables 3-1 through 3-8 below.

3.0 Results

This section identifies the evaluation criteria and test results.

3.1 Results Summary

The results of this test are presented in Tables 3-1 through 3-8 below.

3-1: PMR3 Evaluation Criteria and Results: Pre-Ordering

Test Reference	Evaluation Criteria	Result	Comments
PMR3-1-A	Verizon NJ reported and KPMG Consulting calculated Pre-Ordering metrics values agree.	Satisfied	KPMG Consulting found that all Pre-Ordering (PO) percentages, averages, observations, and differences between metric results and performance standards in the May 2001 CLEC Aggregate Carrier-to-Carrier Report agreed with values calculated by KPMG Consulting.
PMR3-2-A	Verizon NJ Carrier-to-Carrier Reports are accurate and complete with regard to Pre-Ordering metrics.	Satisfied	KPMG Consulting determined that the Pre-Ordering metrics in the February 2001 CLEC Aggregate Carrier-to-Carrier Report were accurate and complete as defined in the Carrier-to-Carrier Guidelines.
PMR3-3-A	Verizon NJ's implemented Pre-Ordering metrics calculations are consistent with the documented metrics calculations.	Satisfied	Verizon NJ's calculations of Pre-Ordering metric values were consistent with the descriptions as detailed in the Carrier-to-Carrier Guidelines.
PMR3-4-A	Verizon NJ's implemented Pre-Ordering metrics exclusions are consistent with the documented metrics exclusions.	Satisfied	KPMG Consulting determined that Verizon NJ's implemented metrics exclusions are consistent with the documented metrics exclusions as defined in the Carrier-to-Carrier Guidelines.

Table 3-2: PMR3 Evaluation Criteria and Results: Ordering

Test Reference	Evaluation Criteria	Result	Comments
PMR3-1-B	Verizon NJ reported and KPMG Consulting calculated Ordering metrics values agree.	Satisfied	KPMG Consulting found that all Ordering (OR) percentages and averages, observation counts, differences between metric results and performance standards, sampling errors, standard deviations, and z-scores in the May 2001 CLEC Aggregate Carrier-to-Carrier Report agreed with values calculated by KPMG Consulting.
PMR3-2-B	Verizon NJ Carrier-to-Carrier Reports are accurate and complete with regard to Ordering metrics.	Satisfied	KPMG Consulting determined that the Ordering metrics in the May 2001 CLEC Aggregate Carrier-to-Carrier Report were accurate and complete as defined in the Carrier-to-Carrier Guidelines.
PMR3-3-B	Verizon NJ's implemented Ordering metrics calculations are consistent with the documented metrics calculations.	Satisfied	Verizon NJ's calculations of Ordering metric values were consistent with the descriptions detailed in the Carrier-to-Carrier Guidelines.
PMR3-4-B	Verizon NJ's implemented Ordering metrics exclusions are consistent with the documented metrics exclusions.	Satisfied	KPMG Consulting determined that Verizon NJ's implemented metrics exclusions are consistent with the documented metrics exclusions as defined in the Carrier-to-Carrier Guidelines.

Table 3-3: PMR3 Evaluation Criteria and Results: Provisioning

Test Reference	Evaluation Criteria	Result	Comments
PMR3-1-C	Verizon NJ reported and KPMG Consulting calculated Provisioning metrics values agree.	Satisfied	KPMG Consulting found that all Provisioning (PR) percentages and averages, observation counts, standard deviations, sampling errors, and z-scores in the May 2001 CLEC Aggregate Carrier-to-Carrier Report agreed with values calculated by KPMG Consulting.
PMR3-2-C	Verizon NJ Carrier-to-Carrier Reports are accurate and complete with regard to Provisioning metrics.	Satisfied	KPMG Consulting determined that the Provisioning metrics in the May 2001 CLEC Aggregate Carrier-to-Carrier Report were accurate and complete as defined in the Carrier-to-Carrier Guidelines.
PMR3-3-C	Verizon NJ's implemented Provisioning metrics calculations are consistent with the documented metrics calculations.	Satisfied	Verizon NJ's calculations of Provisioning metric values were consistent with the descriptions detailed in the Carrier-to-Carrier Guidelines.
PMR3-4-C	Verizon NJ's implemented Provisioning metrics exclusions are consistent with the documented metrics exclusions.	Satisfied	KPMG Consulting determined that Verizon NJ's implemented metrics exclusions are consistent with the documented metrics exclusions as defined in the Carrier-to-Carrier Guidelines.

Table 3-4: PMR3 Evaluation Criteria and Results: Maintenance and Repair

Test Reference	Evaluation Criteria	Result	Comments
PMR3-1-D	Verizon NJ reported and KPMG Consulting calculated Maintenance and Repair metrics values agree.	Satisfied	KPMG Consulting found that all Maintenance and Repair (MR) percentages and averages in the May 2001 CLEC Aggregate Carrier-to-Carrier Report agreed with values calculated by KPMG Consulting. Verizon NJ had 1189 opportunities to report MR observation counts. KPMG Consulting found that all MR observation counts in the May 2001 CLEC Aggregate Carrier-to-Carrier Report agreed with values calculated by KPMG Consulting except for: MR-4-04 (% Cleared (all troubles) within 24 hours) – Retail, POTS, Raritan. Verizon reported 19053

Test Reference	Evaluation Criteria	Result	Comments
			observations and KPMG Consulting calculated 12494 observations. This discrepancy represents 0.08% of the 1189 MR observation counts reported by Verizon NJ. Verizon NJ implemented change control CC2001-01608 to correct the mapping for this metric denominator. This change took effect for the June 2001 data month. KPMG Consulting reviewed and verified the change. KPMG Consulting found that all MR standard deviations, sampling errors, and z-scores in the May 2001 CLEC Aggregate Carrier-to-Carrier Report agreed with values calculated by KPMG Consulting.
PMR3-2-D	Verizon NJ Carrier-to-Carrier Reports are accurate and complete with regard to Maintenance and Repair metrics.	Satisfied	KPMG Consulting determined that the Maintenance and Repair metrics in the May 2001 CLEC Aggregate Carrier-to-Carrier Report were accurate and complete as defined in the Carrier-to-Carrier Guidelines.
PMR3-3-D	Verizon NJ's implemented Maintenance and Repair metrics calculations are consistent with the documented metrics calculations.	Satisfied	KPMG Consulting found that Verizon NJ's calculations of Maintenance and Repair metrics values are consistent with the descriptions detailed in the Carrier-to-Carrier Guidelines.
PMR3-4-D	Verizon NJ's implemented Maintenance and Repair metrics exclusions are consistent with the documented metrics exclusions.	Satisfied	KPMG Consulting determined that Verizon NJ's implemented metrics exclusions are consistent with the documented metrics exclusions as defined in the Carrier-to-Carrier Guidelines.

Table 3-5: PMR3 Evaluation Criteria and Results: Billing

Test Reference	Evaluation Criteria	Result	Comments
PMR3-1-E	Verizon NJ reported and KPMG Consulting calculated Billing metrics values agree.	Satisfied	KPMG Consulting found that all Billing (BI) percentages, observation counts, sampling errors, z-scores, and differences between metric results and performance standards in the May 2001 CLEC Aggregate Carrier-to-Carrier Report agreed with values

Test Reference	Evaluation Criteria	Result	Comments
			calculated by KPMG Consulting.
PMR3-2-E	Verizon NJ Carrier-to-Carrier Reports are accurate and complete with regard to Billing metrics.	Satisfied	KPMG Consulting determined that the Billing metrics in the May 2001 CLEC Aggregate Carrier-to-Carrier Report were accurate and complete as defined in the Carrier-to-Carrier Guidelines.
PMR3-3-E	Verizon NJ's implemented Billing metrics calculations are consistent with the documented metrics calculations.	Satisfied	Verizon NJ's calculations of Billing metric values were consistent with the descriptions as detailed in the Carrier-to-Carrier Guidelines.
PMR3-4-E	Verizon NJ's implemented Billing metrics exclusions are consistent with the documented metrics exclusions.	Satisfied	KPMG Consulting determined that Verizon NJ's implemented metrics exclusions are consistent with the documented metrics exclusions as defined in the Carrier-to-Carrier Guidelines.

Table 3-6: PMR3 Evaluation Criteria and Results: Network Performance

Test Reference	Evaluation Criteria	Result	Comments
PMR3-1-F	Verizon NJ reported and KPMG Consulting calculated Network Performance metrics values agree.	Satisfied	KPMG Consulting found that all Network Performance (NP) averages and percentages, observations, sampling errors, and differences in the May 2001 CLEC Aggregate Carrier-to-Carrier Report agreed with values calculated by KPMG Consulting.
PMR3-2-F	Verizon NJ Carrier-to-Carrier Reports are accurate and complete with regard to Network Performance metrics.	Satisfied	Based on its analysis, KPMG Consulting determined that the Network Performance metrics in the May 2001 CLEC Aggregate Carrier-to-Carrier report were accurate and complete as defined in the Carrier-to-Carrier Guidelines.
PMR3-3-F	Verizon NJ's implemented Network Performance metrics calculations are consistent with the documented metrics calculations.	Satisfied	Verizon NJ's calculations of Network Performance metric values were consistent with the descriptions as detailed in the Carrier-to-Carrier Guidelines.

PMR3-4-F	Verizon NJ's implemented Network Performance metrics exclusions are consistent with the documented metrics exclusions.	Satisfied	KPMG Consulting determined that Verizon NJ's implemented metrics exclusions are consistent with the documented metrics exclusions as defined in the Carrier-to-Carrier Guidelines.

Table 3-7: PMR3 Evaluation Criteria and Results: Operator Services and Databases

Test Reference	Evaluation Criteria	Result	Comments
PMR3-1-G	Verizon NJ reported and KPMG Consulting calculated Operator Services and Databases metrics values agree.	Satisfied	KPMG Consulting found that all Operator Services and Databases (OD) values, observation counts, sampling errors, and z-scores in the May 2001 CLEC Aggregate Carrier-to-Carrier Report agreed with values calculated by KPMG Consulting.
PMR3-2-G	Verizon NJ Carrier-to-Carrier Reports are accurate and complete with regard to Operator Services and Databases metrics.	Satisfied	Based on its analysis, KPMG Consulting determined that the Operator Services and Databases metrics in the May 2001 CLEC Aggregate Carrier-to-Carrier Report were accurate and complete as defined in the Carrier-to-Carrier Guidelines.
PMR3-3-G	Verizon NJ's implemented Operator Services and Databases metrics calculations are consistent with the documented metrics calculations.	Satisfied	Verizon NJ's calculations of Operator Services and Databases metric values were consistent with the descriptions as detailed in the Carrier-to-Carrier Guidelines.
PMR3-4-G	Verizon NJ's implemented Operator Services and Databases metrics exclusions are consistent with the documented metrics exclusions.	Satisfied	KPMG Consulting determined that Verizon NJ's implemented metrics exclusions are consistent with the documented metrics exclusions as defined in the Carrier-to-Carrier Guidelines.

Table 3-8: PMR3 Evaluation Criteria and Results: General

Test Reference	Evaluation Criteria	Result	Comments
PMR3-1-H	Verizon NJ reported and KPMG Consulting calculated General metrics values agree.	Satisfied	KPMG Consulting found that all General (GE) values and observation counts in the May 2001 CLEC Aggregate Carrier-to-Carrier Report agreed with values calculated by KPMG Consulting.

Test Reference	Evaluation Criteria	Result	Comments
PMR3-2-H	Verizon NJ Carrier-to-Carrier Reports are accurate and complete with regard to General metrics.	Satisfied	Based on its analysis, KPMG Consulting determined that the General metrics in the May 2001 CLEC Aggregate Carrier-to-Carrier Report were accurate and complete as defined in the Carrier-to-Carrier Guidelines.
PMR3-3-H	Verizon NJ's implemented General metrics calculations are consistent with the documented metrics calculations.	Satisfied	Verizon NJ's calculations of General metric values were consistent with the descriptions as detailed in the Carrier-to-Carrier Guidelines.
PMR3-4-H	Verizon NJ's implemented General metrics exclusions are consistent with the documented metrics exclusions.	Satisfied	KPMG Consulting determined that Verizon NJ's implemented metrics exclusions are consistent with the documented metrics exclusions as defined in the Carrier-to-Carrier Guidelines.

D. Test Results: Metrics Data Filtering and Integrity Verification and Validation Review (PMR4)

1.0 Description

The Data Filtering and Integrity Verification and Validation Review (PMR4) evaluated the overall policies and practices for replicating and converting the data necessary to produce the performance metrics. The objective was to determine the adequacy and completeness of related procedures. PMR4 used quantitative techniques to verify and validate Verizon New Jersey (Verizon NJ) data used in metric calculations in Pre-Ordering, Ordering, Provisioning, Maintenance & Repair, Billing, Network Performance, and Ordering and Provisioning Trunks.

2.0 Methodology

This section summarizes the test methodology.

2.1 Business Process Description

Orders and troubles submitted into Verizon NJ systems are collected in several data systems and Verizon NJ gathers raw data on the submitted transactions. The raw data are filtered through additional systems or are used to populate Carrier-to-Carrier Reports directly. Verizon NJ identifies processed data as the data that comes out of the last data collection point within its information systems. These data may have exclusions or other data manipulations applied to them since the time that the data entered its first collection point within Verizon NJ systems.

2.2 Scenarios

Scenarios were not applicable to this test.

2.3 Test Targets & Measures

The test targets examined include transfer of data from point(s) of collection and conversion of data from unprocessed to processed form for pre-ordering, ordering, provisioning, maintenance and repair, billing, network performance, and ordering and provisioning trunks.

2.4 Data Sources

The sources of data for this test included: Verizon NJ Carrier-to-Carrier reports, processed data (the same used in the Metrics Calculation and Reporting Verification and Validation Review (PMR3), and unprocessed data in the form of logs, screen shots, and/or extracts.

2.4.1 Data Generation/Volumes

This test did not rely on data generation or volume testing.

2.5 Evaluation Methods

The evaluation method for this test included a comparison of raw data that was processed by KPMG Consulting in accordance with Verizon NJ business rules to determine that the resulting filtered data equals the metric generated by Verizon NJ. In order to conduct this comparison, KPMG Consulting extracted raw data from the unprocessed data collection points identified in the Data Collection and Storage Verification and Validation Review (PMR2). Raw or unprocessed data have not had any exclusions or any other data manipulations applied to them before their use in the calculation of performance metrics. In order to conduct an analysis on the raw data, stratified random samples of transactions were generated from both Verizon NJ retail and CLEC filtered data used in the calculation of metrics. Certain data fields used in metrics calculations were requested from the samples.

The following samples of raw data used to calculate metrics were requested from Verizon NJ:

- June 2000 Provisioning - orders and troubles
- September 2000 Ordering - orders and troubles
- September 2000 Maintenance & Repair Specials - orders and troubles
- September 2000 Ordering & Provisioning Trunks - records
- June 2000 Maintenance & Repair POTS – orders and troubles
- September 2000 Network Performance – records

This information, along with records and logs of the unprocessed data and descriptions of the systems, were delivered to KPMG Consulting. The data received for Pre-Ordering, Provisioning Trunks and Billing metrics were unprocessed, so it was not necessary to develop samples for these domains.

KPMG Consulting examined each unprocessed log, file, and record separately. The raw data was processed into a form that more closely resembled the processed data used in calculating metrics. KPMG Consulting extracted and calculated the fields requested in the sample from the unprocessed data files based on explanations and documentation received from Verizon NJ. Using KPMG Consulting programs to extract and calculate the requested fields, KPMG Consulting compared each unprocessed record to each corresponding record in the processed data and identified inconsistencies. KPMG Consulting also compared its own records of KPMG CLEC transactions (e.g., number of records submitted, confirmation time received, etc.) to Verizon NJ's processed data. This comparison was intended to demonstrate that the data used in the calculation of performance metrics is both accurate and complete.

2.6 Analysis Methods

The Metrics Data Filtering and Integrity Verification and Validation Review (PMR4) included a checklist of evaluation criteria developed by the Test Manager during the initial phase of the Verizon NJ OSS Evaluation. These evaluation criteria provided the framework of norms, standards, and guidelines for the review.

The data collected were analyzed employing the evaluation criteria referenced in Tables 4-1 through 4-7 below.

3.0 Results

This section identifies the evaluation criteria and test results.

3.1 Results Summary

The results of this test are presented in Tables 4-1 through 4-7 below.

Table 4-1: PMR4 Evaluation Criteria and Results: Pre-Ordering

Test Reference	Evaluation Criteria	Result	Comments
PMR4-1-A	The transfer of unprocessed records to processed records is complete.	Not Applicable	Pre-Ordering data used in the calculation of performance metrics are already in the rawest form. Data integrity was not performed on this domain.
PMR4-2-A	Verizon NJ did not add inappropriate records to processed data.	Not Applicable	Pre-Ordering data used in the calculation of performance metrics are already in the rawest form. Data integrity was not performed on this domain.
PMR4-3-A	Unprocessed data were transformed accurately to processed data.	Not Applicable	Pre-Ordering data used in the calculation of metrics are already in the rawest form. Data integrity was not performed on this domain.

Table 4-2: PMR4 Evaluation Criteria and Results: Ordering

Test Reference	Evaluation Criteria	Result	Comments
PMR4-1-B	The transfer of unprocessed records to processed records is complete.	Satisfied	KPMG Consulting analyzed KPMG Consulting CLEC and Verizon NJ retail September 2000 customer orders and observed no cases where an unprocessed record did not appear in the processed data used in calculating performance metrics. Additional analysis was conducted for KPMG Consulting CLEC orders, and KPMG Consulting found that the transfer of data from unprocessed to processed form was complete.
PMR4-2-B	Verizon NJ did not add inappropriate records to processed data.	Satisfied	KPMG Consulting analyzed aggregate filtered data from Verizon NJ CLEC customer orders and verified that Verizon NJ did not add inappropriate records to the data.

Test Reference	Evaluation Criteria	Result	Comments
PMR4-3-B	Unprocessed data were transformed accurately to processed data.	Satisfied	KPMG Consulting requested a sample of 300 records and 23 fields from the rawest collection point of data for September 2000. Out of 6900 possibilities for matches (300 records X 23 fields), Verizon NJ unprocessed data matched 99% of the time with the processed data.

Table 4-3: PMR4 Evaluation Criteria and Results: Provisioning

Test Reference	Evaluation Criteria	Result	Comments
PMR4-1-C	The transfer of unprocessed records to processed records is complete.	Satisfied	KPMG Consulting analyzed aggregate filtered data from orders received from Verizon NJ CLEC customers and verified that Verizon NJ did not add inappropriate records to the data.
PMR4-2-C	Verizon NJ did not add inappropriate records to processed data.	Satisfied	KPMG Consulting analyzed a sample of KPMG Consulting CLEC and Verizon NJ retail customer orders and observed no cases where inappropriate records were added to the processed data used in calculating metrics. Additional analysis was conducted for KPMG Consulting CLEC orders. KPMG Consulting compared KPMG Consulting CLEC data to Verizon NJ metrics data, and there were no instances of Verizon NJ adding inappropriate records to processed data.
PMR4-3-C	Unprocessed data were transformed accurately to processed data.	Satisfied	For the Provisioning test for the Data Integrity investigation, KPMG Consulting requested a sample of 300 records and 25 fields from the rawest collection point of data for June 2000. Out of 6000 possibilities for matches (240 records X 25 fields), Verizon NJ unprocessed data matched 98.5% of the time with the processed data.

Table 4-4: PMR4 Evaluation Criteria and Results: Maintenance & Repair

Test Reference	Evaluation Criteria	Result	Comments
PMR4-1-D	The transfer of unprocessed records to processed records is complete.	Satisfied	KPMG Consulting traced 30 M&R POTS customer trouble reports from the KPMG Consulting CLEC to the Verizon NJ filtered data and observed that in all cases the unprocessed records were transferred completely to the processed data used in calculating performance metrics. KPMG Consulting traced 30 M&R Specials customer trouble reports from the KPMG Consulting CLEC to the Verizon NJ filtered data and observed that in all cases the unprocessed records were transferred completely to the processed data used in calculating performance metrics. KPMG Consulting traced 30 M&R Trunks customer trouble reports from the KPMG Consulting CLEC to the Verizon NJ filtered data and observed that in all cases the unprocessed records were transferred completely to the processed data used in calculating performance metrics.
PMR4-2-D	Verizon NJ did not add inappropriate records to processed data.	Satisfied	KPMG Consulting analyzed aggregate filtered data from M&R POTS trouble reports received from Verizon NJ customers and verified that Verizon NJ did not add inappropriate records to the data. KPMG Consulting analyzed aggregate filtered data from M&R Specials trouble reports received from Verizon NJ customers and verified that Verizon NJ did not add inappropriate records to the data. KPMG Consulting analyzed aggregate filtered data from M&R Trunks trouble reports received from Verizon NJ customers and verified that Verizon NJ did not add inappropriate records to the data.
PMR4-3-D	Unprocessed data were transformed accurately to processed data.	Satisfied	For the Maintenance & Repair POTS test for the Data Integrity investigation, KPMG Consulting requested a sample of 251 records and 26 fields from the rawest collection point of data for June

Test Reference	Evaluation Criteria	Result	Comments
			2000. Out of 6526 possibilities for matches (251 records X 26 fields), Verizon NJ unprocessed data matched 98% of the time with the processed data For the Maintenance & Repair Trunks test for the Data Integrity investigation, KPMG Consulting requested a sample of 31 records and 16 fields from the rawest collection point of data for July 2000. Out of 496 possibilities for matches (31records X 16 fields), Verizon NJ unprocessed data matched 100% of the time with the processed data. For the Maintenance & Repair Specials test for the Data Integrity investigation, KPMG Consulting requested a sample of 185 records and 14 fields from the rawest collection point of data for September 2000. Out of 2590 possibilities for matches (185 records X 14 fields), Verizon NJ unprocessed data matched 97% of the time with the processed data.

Table 4-5: PMR4 Evaluation Criteria and Results: Billing

Test Reference	Evaluation Criteria	Result	Comments
PMR4-1-E	The transfer of unprocessed records to processed records is complete.	Satisfied	Out of eight Billing metrics, KPMG Consulting analyzed BI-2 (Timeliness of Carrier Bill) data for the Data Integrity investigation. For the remaining Billing metrics, Verizon NJ Billing data is already in its rawest possible form. KPMG Consulting analyzed 20 BI-2 records. In all cases, KPMG Consulting was able to track KPMG Consulting CLEC records from an unprocessed state to a processed state.
PMR4-2-E	Verizon NJ did not add inappropriate records to processed data.	Satisfied	Out of eight Billing metrics, KPMG Consulting analyzed BI-2 (Timeliness of Carrier Bill) data for the Data Integrity investigation. For the remaining Billing metrics, Verizon NJ-PA Billing data is already in its rawest possible form. KPMG Consulting analyzed BI-2 aggregate filtered data and verified that Verizon did not add inappropriate records to the data.
PMR4-3-E	Unprocessed data were transformed accurately to processed data.	Satisfied	Out of eight Billing metrics, KPMG Consulting analyzed BI-2 (Timeliness of Carrier Bill) data for the Data Integrity investigation. For the remaining Billing metrics, Verizon NJ Billing data is already in its rawest possible form. KPMG Consulting found that of the 20 BI-2 records submitted by the KPMG Consulting CLEC in September 2000, all were transformed accurately to processed data. .

Table 4-6: PMR4 Evaluation Criteria and Results: Network Performance

Test Reference	Evaluation Criteria	Result	Comments
PMR4-1-F	The transfer of unprocessed records to processed records is complete.	Satisfied	Out of four Network Performance metrics, KPMG Consulting analyzed NP-2 (Collocation Performance) data for the Data Integrity investigation. For the remaining Network Performance metrics, Verizon NJ Network Performance data is already in its rawest possible form. KPMG Consulting traced 38 KPMG customer orders from the KPMG Consulting CLEC to the Verizon CLEC filtered data and observed no cases where an unprocessed record did not appear in the processed data used in calculating performance metrics.
PMR4-2-F	Verizon NJ did not add inappropriate records to processed data.	Satisfied	KPMG Consulting analyzed aggregate filtered data from NP-2 customer orders received from Verizon NJ and verified that Verizon did not add inappropriate records to the data.
PMR4-3-F	Unprocessed data were transformed accurately to processed data.	Satisfied	KPMG Consulting reviewed 38 NP-2 records. KPMG Consulting found that Verizon NJ used calendar days rather than business days in its calculation. This meant that of the 38 records analyzed, Verizon NJ was incorrect in their completion interval 16 times. Verizon determined that this was due to a training error. Verizon issued new training guidelines to its employees and resolved the problem. In addition, by using calendar days instead of business days to calculate the completion interval, Verizon NJ was actually penalizing itself. The CLEC's were not negatively affected.

Table 4-7: PMR4 Evaluation Criteria and Results: Ordering and Provisioning Trunks

Test Reference	Evaluation Criteria	Result	Comments
PMR4-1-G	The transfer of unprocessed records to processed records is complete.	Satisfied	KPMG Consulting traced 40 customer orders from the KPMG Consulting CLEC to the Verizon CLEC filtered data and observed no cases where an unprocessed record did not appear in the processed data used in calculating performance metrics.
PMR4-2-G	Verizon NJ did not add inappropriate records to processed data.	Satisfied	KPMG Consulting analyzed aggregate filtered data from ordering and provisioning trunk orders received from Verizon NJ CLEC customers and verified that Verizon NJ did not add inappropriate records to the data.
PMR4-3-G	Unprocessed data were transformed accurately to processed data.	Satisfied	For the Ordering and Provisioning Trunks test for the Data Integrity investigation, KPMG Consulting requested a sample of 40 records and 33 fields from the rawest collection point of data for September 2000. Out of 1320 possibilities for matches (40 records X 33 fields), Verizon NJ unprocessed data matched 98% of the time with the processed data.

This page is intentionally blank.

E. Test Results: Metrics Change Management Verification and Validation Review (PMR5)

1.0 Description

The purpose of the Metrics Change Management Verification and Validation Review (PMR5) was to evaluate the overall policies and practices for managing changes to Verizon New Jersey (Verizon NJ) metrics and communicating these changes to the State of New Jersey Board of Public Utilities (NJ BPU) and the Competitive Local Exchange Carriers (CLECs). Metrics may undergo changes in definitions, allowed exclusions, standards, report dimensions, or in calculation methods. In addition, new metrics may be added. This test evaluated the process for developing, testing, implementing, and monitoring metric changes and communicating those changes to relevant stakeholders.

Inputs to the PMR5 test included Verizon NJ metrics change management policies and procedures documentation, technical documentation, evaluation checklists, and interview questionnaires. Test activities consisted of conducting interviews, completing evaluation checklists, walking a sample of changes encountered by KPMG Consulting testers through the change control process to verify adherence to documented procedures, and developing and documenting findings. Test outputs included completed evaluation checklists, interview summaries and a final report.

2.0 Methodology

This section summarizes the test methodology.

2.1 Business Process Description

Wholesale Performance Assurance (WPA) is the Verizon NJ change control group and Wholesale Metrics Development (WMD) is a sub-group responsible for Metrics Change Management (MCM). Metrics change control requests are initiated from regulatory mandates, metric maintenance changes or metric emergency changes.

Development of a metric change begins with completion of a Change Control Identification form in the Change Control Database, which is reviewed by a Change Control Manager (CCM). The CCM works with the originator to define the change. A Change Control Record (CCR) is created once the CCM and the originator define the change and determine that it is necessary. All metric changes require the approval of the Director/WMD and Vice President/WPA. Once a change is approved, an email notification is sent to data providers to begin work on the change. Data providers refer to Verizon staff responsible for the calculation of metrics results. The data providers assess the impact of the change within a 10-day timeframe and create an electronic response that indicates their ability to meet the requested implementation date. The data providers then begin work on implementing the change, developing new code, queries and data streams as required. If, during the course of their work, the data providers find they cannot meet the date, a Jeopardy Notice Form is issued informing the CCM of the potential missed commitment.

When development work is complete, the change is ready for validation and testing. A test file and an electronic Validation Form are sent to the Wholesale Performance Metrics (WPM) group to determine if it is possible to map the metric results associated with the change to the appropriate Carrier-to-Carrier Reports. WPM approves the form if mapping is possible. Following appropriate sign-off, the metric change then goes into production and the CCM closes out the change in the database. The database uses electronic forms to track metric changes through the various stages of the change control process from initiation to completion.

The NJ BPU and CLECs are notified electronically of the metric changes via Metric Change Control Records sent out when changes are scheduled, rescheduled, completed or retracted. As part of the notification process, all changes to regulatory orders, metrics processes, data calculation clarifications and corrections are communicated to ensure that CLECs are able to independently validate the accuracy of the metric results contained in the Carrier-to-Carrier Reports.

2.2 Scenarios

Scenarios were not applicable to this test.

2.3 Test Targets & Measures

The test target examined the metrics change management process and included reviews the following sub-processes:

- Developing change proposals
- Evaluating change proposals
- Implementing changes
- Change management intervals
- Change management documentation
- Tracking change proposals

2.4 Data Sources

The data collection for this test included Wholesale Metrics Development Change Control Database Manual, Wholesale Metrics Change Control Process Manual, Wholesale Performance Assurance Organization Chart, Issue Logs, Distribution List for Metrics Change Notification, and Change Control Records.

2.4.1 Data Generation/ Volumes

This test did not rely on data generation or volume testing.

2.5 Evaluation Methods

The PMR5 test was conducted using three types of evaluation technique: interviews, document review, and inspection and included the following activities:

- Sending data requests for all New Jersey specific metrics change control documents along with a current report from the database indicating all New Jersey Metrics Change Control Requests (pending, active and closed).
- Interviewing Verizon NJ's change control subject matter experts.
- Completing checklists incorporating specific evaluation criteria to determine whether processes were adequate, complete, and consistent.
- Attending a demonstration of Verizon NJ's change control database and walking a sample of changes, selected by KPMG Consulting, through the change control process.
- Developing and documenting findings.

2.6 Analysis Methods

The PMR5 test included a checklist of evaluation criteria developed by the Test Manager during the initial phase of the Verizon NJ OSS Evaluation. These evaluation criteria provided the framework of norms, standards, and guidelines for the Metrics Change Management Verification and Validation Review (PMR5).

3.0 Results

This section summarizes the test results.

3.1 Results Summary

The results of this test are presented in Table 5-1 below:

Table 5-1: PMR5 Evaluation Criteria and Results

Test Reference	Evaluation Criteria	Result	Comments
PMR5-1	Verizon NJ has a consistent process for developing change proposals.	Satisfied	KPMG Consulting's review of the Wholesale Metrics Development Change Control Database manual, the Wholesale Metrics Change Control Process manual, and organizational charts confirmed the existence of an established process at Verizon NJ for developing change proposals. In order to validate adherence to documented procedures, KPMG Consulting reviewed changes selected from the Verizon database. KPMG Consulting inspected the corresponding Change Control Identification Forms, the Change Control Record Forms as well as the email messages between the Change Control Manager and the Change Initiators. The result of the review was satisfactory as Verizon NJ consistently adhered to the documented procedures
PMR5-2	Verizon NJ has a complete and consistent process for evaluating change proposals.	Satisfied	KPMG Consulting's review of the Wholesale Metrics Development Change Control Database manual, the Wholesale Metrics Change Control Process manual, and organizational charts confirmed the existence of an established process at Verizon NJ for evaluating metric change proposals. Verizon NJ has a process for evaluating change based on accuracy and reasonability, a process for approving change before it is implemented, as well as a process for testing and approving change before it goes into production.

Test Reference	Evaluation Criteria	Result	Comments
			In order to validate adherence to documented procedures, KPMG Consulting reviewed changes selected from the Verizon database. KPMG Consulting inspected the corresponding approvals in the database. This included Vice Presidential and Director approval as well as the sign off by the WPM. KPMG Consulting also inspected test files, validation forms and correspondence between the CCMs and the data providers (i.e. the Verizon staff responsible for the calculation of metrics results). KPMG Consulting's review of the changes demonstrated compliance to the documented procedures.
PMR5-3	Verizon NJ has a consistent change implementation process.	Satisfied	KPMG Consulting's review of the Wholesale Metrics Development Change Control Database manual, the Wholesale Metrics Change Control Process manual, and organizational charts confirmed the existence of an established process at Verizon NJ for implementing metric changes. In order to validate adherence to documented procedures, KPMG Consulting reviewed changes selected from the Verizon database. KPMG Consulting inspected the corresponding Jeopardy Notice forms alerting the Change Control Manager of implementation slippage. Verizon NJ personnel were also able to identify the implementation month affected by the change. A change control number traceable to the database supported each change selected. KPMG Consulting also reviewed numerous changes encountered during the course of the test. KPMG Consulting found two changes that were implemented without issuance of a change control number and did not go through the change control process. Verizon took corrective action to preclude this from happening in the future by reviewing change control procedures with the data providers. No further discrepancies were encountered.

Test Reference	Evaluation Criteria	Result	Comments
PMR5-4	Verizon NJ data and documents used before and after implementation of changes are archived.	Satisfied	The change control group (WMD) follows Verizon NJ corporate policies regarding data backup and retention schedules. Historic metric change documents in the Change Control Database are backed up regularly. Change control information is retained for seven years. KPMG Consulting verified that Verizon NJ adheres to the procedures for archiving metric change information and found that Verizon NJ's technical code both before and after implementation of metric changes was retrievable by data providers.
PMR5-5	Verizon NJ metric change intervals are reasonable.	Satisfied	The general timeframe to implement a change is 60 to 90 days. This is shorter or longer depending on the complexity and impact of the change. Negotiation sessions are held with data providers to determine the workload impact of metric changes as well as the data and programming requirements of the change. Once notified of a change, data providers inform Verizon NJ's Wholesale Metrics Development team of any system impact and/or issues within ten days. In order to validate adherence to documented procedures, KPMG Consulting randomly selected changes and inspected the corresponding email messages between the data providers and the change control manager regarding the implementation date of the change. The result of this inspection revealed that the metric change intervals are reasonable and that there is a process in place to address changes that cannot be implemented within the expected timeframe.
PMR5-6	Verizon NJ documentation supporting metric changes is updated in a timely and complete manner.	Satisfied	KPMG Consulting inspected changes in the database and verified that real time updates are made to the database. Updates to the change control records reviewed by KPMG Consulting included updates to all the required steps in the change control process. Automated email notifications, timers and escalation features demonstrate

Test Reference	Evaluation Criteria	Result	Comments
			Verizon NJ's emphasis on timely documentation updates and internal notification of all relevant parties. Inspection of the change control records as well as experience with actual metrics changes encountered reflected adherence to documented procedures.
PMR5-7	Verizon NJ has an adequate notification process regarding metric changes and errors.	Satisfied	KPMG Consulting reviewed Verizon's Method & Procedure Release document (issued on April 18, 2001), which described Verizon NJ's process for notifying the State of New Jersey Board of Public Utilities (NJ BPU) and the CLEC community of changes made to individual metrics, and found the notification process described therein to be deficient. Based on KPMG Consulting's findings and suggestions, which were approved by the NJ BPU, Verizon issued a Metrics Business Rules (MBR) document on July 27th, 2001 and modified its change control notification process. The modified process is captured in a Metrics Change Control Notification Process (MCC) document dated July 2001 which describes the process by which the CLECs and the state regulatory commissions are notified of changes to metrics. The MBR document expands the information regarding the baseline metrics contained in the Carrier-to-Carrier Guidelines used by Verizon to calculate the metric results contained in the Carrier-to-Carrier Reports. KPMG Consulting conducted a process review of the MCC and the MBR document and was satisfied with the result. During the course of the test, Verizon provided KPMG Consulting with Issue Logs, also available to the NJ BPU and CLEC community, which were sent out once a month along with the Carrier-to-Carrier Reports. KPMG Consulting reviewed the logs and found them to be deficient. Verizon took corrective action to improve the process and the information provided in the Issue Logs and no further discrepancies were encountered.

Test Reference	Evaluation Criteria	Result	Comments
			Subsequent to the issuance of the MCC document, Verizon started issuing Change Control Records to replace the Issue Logs as the notification mechanism. KPMG Consulting verified that the Change Control Records contained all the information as documented in the MCC document and was satisfied with the result.
PMR5-8	Verizon NJ process for tracking change proposals is adequate and complete.	Satisfied	KPMG Consulting's review of the Wholesale Metrics Development Change Control Database manual, the Wholesale Metrics Change Control Process manual, and organizational charts confirmed the existence of an established process at Verizon NJ for tracking metric changes. KPMG Consulting was able to track every stage in the life cycle of selected changes through the Verizon NJ change control database. Fields migrate from one form to another so that reentering information is not necessary. As documents are routed through the database's automated messaging system, communication is tracked and maintained as part of the permanent record.

This page is intentionally blank.

Appendix A

Statistical Analysis

This page is intentionally blank.

Statistical Analysis (Appendix A)

Background

The statistical tests performed in this evaluation depended on the size of the data sets and the type of data being evaluated. For all tests, the Null Hypothesis was that the metric-defined standard is met. The Alternative Hypothesis was one-sided and the Type I error level (α level) was set at 5%.[53] In general, a result of statistical significance implied a "Not Satisfied" result in the test. However, practical considerations meant that in some cases, a result of "Satisfied" was given, even though the statistical test showed a technical departure from the standard. On the other hand, a non-significant statistical result implies no need for re-testing, but there were cases where re-testing was performed for other, non-statistical considerations.

If Verizon NJ met or exceeded the standard according to the test data, the analysis did not determine or report the significance level, but in those cases it can be assumed to be above the 0.5000 level. Where statistical testing was necessary, the significance level is reported.

Below is a discussion of the statistical tests used for the two types of metrics (metrics that test averages and metrics that test proportions).

Tests on Averages

Two types of comparisons were performed with respect to averages. In the first type, an average is compared to a fixed benchmark (benchmark tests). In the second type, an average is compared to a retail average (parity tests). Prior to the statistical testing, basic assumptions were checked to ensure no extraordinary outliers or abnormalities exist that would affect the comparison. Assuming no data problems, a one-sample t-test was performed for benchmark tests and a two-sample t-test was performed for parity tests.

For parity tests, KPMG Consulting performed a permutation test if the test data set or the retail data set contained fewer than 200 items. A permutation test is preferable to the standard t-test for smaller sample sizes because it carries no assumptions about the underlying probability distribution of the data. However, once the number of observations in both data sets exceeds 200, the permutation test becomes computationally difficult. In addition, the t-test results and permutation test results are almost exactly equivalent once the number of observations for both data sets is greater than 200, assuming other test assumptions are met. The cut-off of 200 was used for the permutation test because KPMG Consulting determined that the permutation test was more appropriate, and in-house computational capabilities allowed for a permutation test with samples of approximately 200 or fewer.

[53] The Alternative Hypothesis is that Verizon NJ is failing to meet the standard. The Type I error rate of 5% limits the rate of erroneous failures to 5%. In other words, if Verizon NJ is meeting the standard, the statistical test will only give a result of failure 5% of the time.

Tests on Proportions

A Binomial test was used for all comparisons with only one proportion. This test allows for an exact computation of the significance level when comparing one proportion to an absolute standard. Alternative tests only approximate this level. For comparisons involving two proportions, a Hypergeometric test was used when the higher of the counts was fewer than 10,000. This test allows for an exact computation of the p-value when comparing two proportions. If the higher of the counts was greater than 10,000, a Binomial (with the percentage of the higher count considered fixed) test was used.

Limitations

The statistical analysis has a number of limitations. Since KPMG Consulting is primarily using data collected during the test period, it cannot be determined, in any definitive way, whether test period conditions are different than conditions outside the test period. This limitation includes some differences out of Verizon NJ's control, such as seasonality, as well as some differences that may be within the control of Verizon NJ, such as level of service provided. For purposes of these comparisons, it is assumed that these differences do not exist. Verizon NJ has been relied upon to provide accurate test period data.

Appendix B

Test Cross Reference
Master Test Plan to the Final Report

This page is intentionally blank.

Test Cross Reference Master Test Plan to the Final Report (Appendix B)

Master Test Plan		Final Report	
Test Number	**Test Name**	**Section Number**	**Section Name**
PMR1	Metrics Standards and Definitions Documentation Verification and Validation	VIII, A	Performance Metrics Reporting Domain Results and Analysis
PMR2	Data Collection and Storage Verification and Validation Review	VIII, B	Performance Metrics Reporting Domain Results and Analysis
PMR3	Metrics Calculation and Reporting Review Verification and Validation	VIII, C	Performance Metrics Reporting Domain Results and Analysis
PMR4	Metrics Data Filtering and Integrity Verification and Validation Review	VIII, D	Performance Metrics Reporting Domain Results and Analysis
PMR5	Metrics Change Management Verification and Validation Review	VIII, E	Performance Metrics Reporting Domain Results and Analysis
PPR1	Change Management Practices Verification and Validation Review	III, A	Relationship Management and Infrastructure Domain Results and Analysis
PPR2	Account Establishment & Management Verification and Validation Review	III, B	Relationship Management and Infrastructure Domain Results and Analysis
PPR3	System Administration Help Desk Functional Review	III, C	Relationship Management and Infrastructure Domain Results and Analysis
PPR4	CLEC Training Verification and Validation Review	III, D	Relationship Management and Infrastructure Domain Results and Analysis
PPR5	Interface Development Verification and Validation Review	III, E	Relationship Management and Infrastructure Domain Results and Analysis
PPR6	Forecasting Verification and Validation Review	III, F	Relationship Management and Infrastructure Domain Results and Analysis
PPR7	Network Design Request, Collocation, and Interconnection Planning Verification and Validation	V, A	Provisioning Domain Results and Analysis

Master Test Plan		Final Report	
Test Number	**Test Name**	**Section Number**	**Section Name**
PPR8	POP Manual Order Process Evaluation	IV, A	Pre-Order/Order Domain Results and Analysis
PPR9	POP Work Center Support Evaluation	IV, B	Pre-Order/Order Domain Results and Analysis
PPR10	Provisioning Process Evaluation	V, B	Provisioning Domain Results and Analysis
PPR11	Provisioning Coordination Process Evaluation	V, C	Provisioning Domain Results and Analysis
PPR12	Billing Work Center/Help Desk Support Evaluation	VII, A	Billing Domain Results and Analysis
PPR13	Daily Usage Production and Distribution Process Evaluation	VII, B	Billing Domain Results and Analysis
PPR14	Bill Production and Distribution Process Evaluation	VII, C	Billing Domain Results and Analysis
PPR15	End-to-End M&R Process Evaluation	VI, A	Maintenance and Repair Domain Results and Analysis
PPR16	M&R Work Center Support Evaluation	VI, B	Maintenance and Repair Domain Results and Analysis
PPR17	M&R Coordination Process Evaluation	VI, C	Maintenance and Repair Domain Results and Analysis
PPR18	Network Surveillance Support Evaluation	VI, D	Maintenance and Repair Domain Results and Analysis
TVV1	POP Functional Evaluation	IV, C	Pre-Order/Order Domain Results and Analysis
TVV2	POP Volume Performance Test	IV, D	Pre-Order/Order Domain Results and Analysis
TVV3	Order Flow-Through Evaluation	IV, E	Pre-Order/Order Domain Results and Analysis
TVV4	Provisioning Verification and Validation	V, D	Provisioning Domain Results and Analysis

Master Test Plan		Final Report	
Test Number	**Test Name**	**Section Number**	**Section Name**
TVV5	M&R RETAS Functional Evaluation	VI, E	Maintenance and Repair Domain Results and Analysis
TVV6	M&R RETAS Performance Evaluation	VI, F	Maintenance and Repair Domain Results and Analysis
TVV7	End-to-End Trouble Report Processing	VI, G	Maintenance and Repair Domain Results and Analysis
TVV8	Billing Functional Usage Evaluation	VII, D	Billing Domain Results and Analysis Section
TVV9	Functional Carrier Bill Evaluation	VII, E	Billing Domain Results and Analysis Section

This page is intentionally blank.

Appendix C

Summary of Final Report Updates

This page is intentionally blank.

Summary of Final Report Updates (Appendix C)

Section	Name	Summary of Updates
Global		♦ ♦ ♦
I	Document Control	♦
II	Executive Summary	♦
III	Relationship Management Infrastructure	♦
IV	Pre-Order/Order	♦
V	Provisioning	♦
VI	Maintenance and Repair	♦
VII	Billing	♦
VIII	Performance Metrics	♦

This page is intentionally blank.

Appendix D

Glossary

This page is intentionally blank.

Glossary (Appendix D)

Term	Definition
Access Carrier Name Abbreviation (ACNA)	A three to four character code used to identify a telecommunications carrier.
Access Service Request (ASR)	Form used to order interoffice facilities such as dedicated trunk ports.
Alternate Exchange Carrier Name (AECN)	A unique identifier for a CLEC. Telcordia (formerly Bellcore) only recognizes this term as Exchange Carrier Code (ECC).
271 Application	An application to offer long distance services from an RBOC to a state or federal regulatory agency. In order to grant this application, the agency must find the applicant is in compliance with the 14 point competitive checklist described in the 1996 Telecommunications Act.
Automatic Call Distributor (ACD)	Used in the work centers to distribute calls to agents dedicated to handling customer inquiries.
Automatic Message Accounting (AMA)	A system that records and documents billing information for long distance calls made by a subscriber.
Bell Atlantic System Support (BASS)	The System Administration Help Desk was formerly known as the Bell Atlantic System Support (BASS) Help Desk. As of July 24, 2000, BASS became known internally and externally as the Verizon Wholesale Customer Care Center (WCCC).
Bill Cycle	A grouping of customers that are selected according to a predetermined schedule for billing, generally monthly. Customers are assigned to a bill cycle by Verizon to distribute accounts in a manner to allow efficient use of resources. Alternatively, customers' are allowed to select a bill cycle. These principles apply to both wholesale and retail billing.
Bill Cycle Balancing	The procedure by which the charges associated with the inputs of a billing cycle are reconciled with the charges of the outputs of the billing cycle.
Bill Data Tape (BDT)	Format in which end user account bills are transmitted to the CLEC/Reseller.
Bill Period	The period of time covered by a customer bill. Each end user has one bill per bill period. Assignments of cycle and period are made by Verizon.
Billing and Collections Operations Center (B&COC)	Handles billing inquiries, dispute resolution, processing billing adjustments, resends of paper bills, and collection of bills in arrears. This center serves Resellers, UNE, and UNE-P CLECs.
Billing Completion Message (BCM)	Message supplied by Verizon to a CLEC following the completion of downstream billing system updates.
Billing Telephone Number (BTN)	The number to which charges from a given telephone service are billed.

Term	Definition
Billing Telephone Number Accounts	These accounts represent "dummy" phone numbers that are used to aggregate a Reseller's charges into a consolidated bill. Reseller's have several separate BTN accounts.
Carrier Account Team Center (CATC)	Verifies the accuracy of a design automatically developed in the TIRKS system.
Carrier Bill Code	Each bill format has its own unique code. Particular charges will cause the production of a specific bill format. The code is related to each product, and determines on which bill the product will appear.
Carrier to Carrier Guidelines (C2C)	A set of standards mandated by state regulators defining the service levels an ILEC is required to provide a CLEC and the methods of measuring those service levels.
Casual Usage	Telephone usage dialed through a calling card or 10XXXX.
Central Office (CO)	Facility where subscribers' lines connect to switching equipment.
Change Management	The process by which changes are introduced at Verizon. Important steps include: 1. Advance notification that a change will occur; 2. CLEC input is considered when making changes; and 3. Smooth roll-out of the change.
Circuit Provisioning Center (CPC)	The CPC assigns the various components of circuits and distributes the TIRKS document.
CLEC Test Environment (CTE)	The test environment where active and new entrant CLECs test their systems against Verizon NJ software releases in advance of connecting to the production environment.
CLEC Handbook	User documentation for CLEC that describes, in 3 volumes, how to establish a CLEC, the technical specifications for interacting with Verizon, and the business rules CLECs should follow in order to purchase unbundled network elements.
CLEC Live Data	Production data delivered through interfaces that are already operational for real CLEC customers.
Competitive Access Provider (CAP)	Facilities-based carrier providing alternative access service.
Connect/Network Data Mover (NDM)	An electronic method of delivering data files. Available for both mainframes and PCs.
Customer Account Record Exchange (CARE)	Industry standard for formatting exchange of subscription information.
Customer Identification Number (CIN)	A unique number given to each customer to use as an identifier. Usually a short series of numbers at the end of the BTN.

Term	Definition
Customer Record Information System (CRIS)	System used in the customer billing process.
Customer Repair Service Center (CRSC)	Now called Verizon Repair Resolution Center (VRRC) where trouble call reports from Verizon NJ retail customers are received and processed.
Customer Service Center (CSC)	The Dispatch Resource Centers (CSCs), formerly the Customer Service Centers (CSCs), are organized as wholesale and retail centers and are responsible for dispatching on installation and maintenance for special services and unbundled loops for CLECs.
Customer Service Record (CSR)	Contains all the information regarding the products and services provided to a customer by the local telephone company.
D – Mark	Demarcation Point. Point at which ILEC facilities (usually loops) connect to customer premise equipment.
Data-Driven Process	Scenarios tested through the creation of generated transactions, operations data, or live data.
Daily Usage Feed (DUF)	A daily download of usage data from the switch that is delivered to Verizon's message processing system and subsequently sent to the CLEC.
Design Build Team (DBT)	The Design Build Team processes assignment errors on Requests for Manual Assistance (RMA).
Digital Service Center (DSC)	The Digital Services Center (DSC) handles loop equipment assignment and specific FRS parameter testing following SSC tests for 56kbps or 64 Centi Call Seconds (CCS).
Direct Inward Dialing (DID) number block	A block of numbers reserved for a Centrex/PBX. DID allows internal dialing by entering only extensions.
Document review	Compilation and review of books, manuals, and other publications related to the process and system under study.
Electronic Data Interchange (EDI)	A process for exchanging information that is subject to industry standards.
Electronic Interface Format (EIF)	A standardized file format needed to communicate with the Direct Carrier Administration System (DCAS).
Entrance and Exit Criteria	The necessary conditions for starting or completing individual tests described in the Master Test Plan.
Error Service Order Interface (ESOI)	The system Verizon's Facility Assigners use to notify the negotiator (retail sales person) that there is an error on the order that the negotiator must correct before the order can continue through the provisioning process.

Term	Definition
Error (ERR)/Rejection Notification	Notification generated by Verizon's systems when a request from a CLEC cannot be filled without additional manual clarification.
Evaluation Criteria	Discrete set of measures applied to specific test components.
Exchange Message Interface (EMI)	A guideline published by the Ordering and Billing Forum (OBF), an industry wide billing group, that shows the format in which usage data is passed to the CLEC.
Existence Criteria Type	These are criteria where only two possible test results can exist (e.g., true/false, presence/absence), such as whether a document exists or does not exist.
Expected Results Worksheet	A report format that lists the expected results for each test while allowing the tester to record the current results of the test. This allows an easy comparison of numbers.
Field Identifier (FID)	Refers to fields of information used in the service order.
FIRST system	System that reviews RMAs in the MLAC before they are manually worked. FIRST makes the assignment for simple errors and the order then continues to flow. FIRST is not an acronym, it is a system.
Flow-Through (FT)	An order placed by a CLEC customer service representative that can be provisioned correctly without manual intervention by a Verizon NJ service representative.
Graphical User Interface (GUI)	A computer interface that allows users to access programs and enter data.
Hot Cut	A term used to describe the work done at the main distribution frame during the transfer of an ILEC-owned line to a CLEC-owned line.
Incumbent Local Exchange Carrier (ILEC)	The local exchange carrier for a particular area as of 1996.
Inspection	Physical reviews of process activities and products, including site visits, walkthrough, read-throughs, and work center observations.
Legal and Regulatory Requirements criteria source	This includes requirements specified by statute and regulation, such as FCC orders, court orders, NJ BPU regulations, federal and state statutes, and other binding requirements resulting from judicial/governmental proceedings.
Local Access and Transport Area (LATA)	A geographic area established by law within which an ILEC may provide telecommunications services.
Local Primary Inter-Exchange Carrier (LPIC)	Pre-designated Intra-LATA Carrier - Telephone company chosen by the end user as being the default carrier for calls outside the local calling area, but within the same LATA. These are also known as regional toll calls.

Term	Definition
Local Service Confirmation (LSC)	A response from the Verizon Service Order Processor that acknowledges a successful receipt of an order from a CLEC.
Local Service Request (LSR)	Form sent from a CLEC to an ILEC initiating an end user requested change to local telephone service.
Local Service Request Local Response (LSRLR)	The firm order confirmation returned to the CLEC by Verizon that identifies the date by which the order will be provisioned.
Local Usage Detail (LUD)	Available for measured and message rate end user in a report that may be requested by the CLEC.
Loop Facility Assignment and Control System (LFACS)	A provisioning process system used by Verizon NJ to assign the loop, cable and pair for orders.
Loop Maintenance and Operating System (LMOS)	A maintenance management and repair delivery system used by Verizon NJ for M&R activities related to POTS services.
Master Test Plan (MTP)	Identifies the overall framework and structure of the OSS test.
Main Distribution Frame (MDF)	The primary point at which outside plant facilities terminate within a Wire Center for interconnection to other telecommunications facilities within the Wire Center.
Mechanized Loop Assignment Center (MLAC)	The MLAC processes RMAs with assignment errors, responds to calls for assistance from the field and performs database management functions.
Mechanized Loop Test (MLT)	A loop test used by Verizon NJ to initially test a POTS loop during trouble shooting.
Memory Administration Recent Change History system (MARCH)	A provisioning process system used by the Translation Administrators in the MLAC to apply translations to switches.
Message Customer Record Information System (MCRIS)	System used within Verizon NJ to receive and process central office switch usage records.
Minimal Input Service Order System (MISOS)	An interface system that captures the raw images of CLEC service orders in Verizon NJ, conducts basic edits on the account and order data, and passes the edited order on to subsequent provisioning systems.
National Dispatch Resource Center (NCSC)	Manages dispatches related to provisioning requested services.
Network Administration Center (NAC)	The NAC performs telephone number administration, some line assignments and monitors performance of switches. Formerly called Switching Administration or SWAD.

Term	Definition
Network Design Review (NDR)	A comprehensive planning process by which the scope of a network project is established along with the preliminary timeframe in providing service to a CLEC. This is required for any new facilities based CLEC.
Network Operations Center (NOC)	The NOC executes complex translations, provisions trunks, and performs software provisioning. Center is also responsible for switch surveillance, traffic control/analysis, receipt/screening of trouble tickets for the maintenance groups, and performs software input conditioning of switches for installation.
Network Operations Results Database (NORD)	NORD contains Maintenance and Repair service data, which is used in metric calculations.
Network Services Assurance Center (NSAC)	Responsible for overseeing, monitoring, and maintenance of the Verizon NJ network.
Non-Flow-Through (NFT)	An order placed by a CLEC customer service representative that can be provisioned correctly only with manual intervention by a Verizon NJ service representative.
Online Service Provisioning (OLSP)	System that allows for activation and provisioning of service orders online.
Operating Company Number (OCN)	A four character code to identify any service provider.
Operation Support Systems (OSS)	Systems used to perform pre-ordering, ordering, provisioning, maintenance and repair, and billing.
Operational Analysis	Operational analysis focuses on the form, structure, and content of the business process under study. This method is used to evaluate day-to-day operations and operational management practices.
P-Value	The frequency that the test result would be observed, given the benchmark. When the p-value is low, it means either that Verizon is not meeting the benchmark or that the result was an anomaly. To guard against the latter, which is referred to as Type I error, the p-value is set to 5% for all KPMG Consulting's quantitative tests.
Parity Criteria Type	These are criteria that require two measurements to be developed and compared, such as whether external response time is at least as good as internal response time.
Performance and Capacity	Methods used to evaluate the performance and capacity of selected elements within the six domains. For example, it relates to tests conducted to determine if Verizon -NJ's OSS can handle quantities of orders matching a reasonable forecasted demand.
Primary Inter-exchange Carrier (PIC)	The long distance company to which traffic is automatically routed when an end user dials 1+ in equal access areas.
Provisioning	The act of supplying telecommunications services.

Term	Definition
Provisioning Analyst Workstation System (PAWS)	PAWS is used to manage and assign work in the MLAC, DBT, and NAC.
Provisioning Completion Message (PCM)	Informs a CLEC that activities relating to specific service request are completed.
Quality Assurance (QA)	Process by which a CLEC demonstrates its ability to adequately format orders as part of the process of entering a new market.
Quality Billing Center (QBC)	Has overall responsibility for the accuracy of Verizon NJ wholesale billing.
Qualitative Criteria Type	These criteria set a threshold for performance where a range of quality values is possible, such as level of customer satisfaction.
Recent Change Memory Administration Center (RCMAC)	The RCMAC handles fallout from Verizon NJ's provisioning systems to program the switches.
Regional CLEC Coordination Center (RCCC)	The RCCC coordinates provisioning of hot cuts, DS1, DS3 and EEL service for CLEC orders.
Report Review	Reviews and analysis of historical data, reports, metrics, and other information in order to assess the effectiveness of a particular system or business function. This includes performance measurement reports and other management reports.
Request Manager (RM)	System allows Verizon's wholesale customers to perform online functions associated with ordering and provisioning.
Resale Handbook	User documentation for reseller that describes, in three volumes, how to establish a reseller, the technical specifications for interacting with Verizon, and the business rules resellers must follow in order to resell Verizon products and services on an unbundled basis.
Resale Service Center (RSC)	Verizon NJ personnel providing support services for the submission and processing of service orders and the maintenance of services sold for resale.
Reseller Sub-Accounts	Each converted end user account automatically becomes a reseller sub-account. Each reseller sub-account contains the following identifiers. 1. Original end user BTN + new Customer code; 2. Bill Period; 3. ECC; 4. CIN.
Repair Trouble Administration System (RETAS)	A trouble administration system accessed via a Web GUI that serves as a front-end.
Request for Manual Assistance (RMA)	Fallout from Verizon NJ's automated provisioning systems is handled through requests for manual assistance.

Term	Definition
Reseller Identification Code (RSID)	Verizon's term for exchange carrier code (ECC).
Scalability	The degree to which an application can be scaled to accommodate order of magnitude increases in transaction volumes and users.
Service Delivery Method (SDM)	Verizon offers three methods for delivering services to its wholesale customers. These methods are UNE, UNE-P, and Resale.
Service Order Analysis and Control (SOAC)	System that controls the flow of orders through the provisioning process.
Service Order Management Administrative Report Tracking System (SMARTS)	A network system used by Verizon NJ to administer and track service orders requiring the dispatch of technicians.
Service Order Processor (SOP)	Provisioning process system used for order entry.
Service Order Results Database (SORD)	Contains information on all orders processed by Verizon. Data is extracted from SORD to calculate provisioning metrics.
Software Provisioning Center (SPC)	Creates the translations used to program switches for Centrex Plus, and ISDN services.
Special Services	Group responsible for provisioning and maintenance of special services.
Sub-account Billing Telephone Number (SBTN)	End user telephone number for a reseller account.
Supplements	A change to an order taken after the original order was submitted, but before the order is executed. Order execution should include all supplements.
Suspend for Non-Payment	Collection activity including suspension of outgoing calls (one-way), or both outgoing and incoming calls (two-way).
Switched Access Remote Test System (SARTS)	An M&R testing system used by Verizon NJ to trouble-shoot special services circuits.
SWITCH/FOMS	Switch/Frame Operations Management System. SWITCH maintains the inventory of inside plant equipment. FOMS is used in the provisioning process to dispatch Central Office Technicians for inside plant wiring.
System Readiness Test (SRT)	A controlled, open submission of pre-order and order transactions to Verizon's production environment. The purpose of this test was to demonstrate to all test participants that Verizon's back-end systems were ready for the main transaction tests

Term	Definition
Telecom Industry Services Operations Center (TISOC)	This is the single point of contact for processing wholesale service requests. The TISOC was renamed National Marketing Center in May 2001.
Test Bed	A set of fictitious customers that are designed to assist with testing. The test bed consists of working, virtual and physical lines and provisioned products, although the owning customer is fictitious. The test bed is used to test all Verizon NJ system functions.
Test Call Matrix	A list of call types and the quantity of calls for each type that should be included in a particular test.
Test Domain	A specific testing area with defined targets, measures, scenarios, evaluation methods, and test processes. In the Verizon NJ OSS test the test domains are Relationship Management; Pre-Order/Order; Provisioning; Maintenance and Repair; Billing; and Performance Metrics
Test Scenario Coverage Matrices/Traceability Matrices	A list of products or processes that are involved with each scenario. Describes how testing elements are traced from the compliance requirements through the test process.
Test Scenario Index	Master list of scenarios from which specific scenarios will be selected to be used in the testing.
Test Scenarios	Scenarios describe realistic situations in which CLEC's purchase wholesale services and network elements from Verizon NJ for resale to the CLEC's end user customer on a retail basis.
Test Target	A discrete set of measures to be applied to specific test components.
Test Transaction Generator (TTG)	This system was created to support the testing effort. The TTG simulates CLEC behaviors by sending transactions through Verizon NJ's OSS. The TTG records the success or failures of each transaction and creates reports.
Transaction Driven - CLEC Cases	The CLEC case method requires extensive participation by the Phase 2 tester to observe the execution, measure and monitor progress and results, and inspect and audit the execution and results.
Transaction Driven – GUI Cases	The GUI test method is applied to test cases that use the GUI approach in real-world actions.
Transaction-Driven System Analysis	Transaction driven system analysis relies upon initiation of transactions, tracking of transaction progress, and analysis of transaction completion results to evaluate the automated system under test.
Transaction Driven – TTG Stress/Load Volume (100 percent automated)	The purpose of this stress and load test method is to test capacity and identify potential choke points in the accessing of information from Verizon -NJ business processes.

Term	Definition
Transaction Driven – Test Transaction Generator (TTG) Normal Volume (automated and interactive)	Based upon normally expected transaction volumes, the TDG will derive and store expected results for comparison with actual results.
Transaction Generation	Transaction generation is the use of live, historical, and/or generated data and data processing capability to evaluate an automated and/or manual system under test.
Trunk Inventory Record Keeping System (TIRKS)	System used in the provisioning process to assign circuits to orders.
Unbundled Access	Ability of other LECs to access and use Verizon NJ network components to fill in gaps where these providers' networks do not have their own facilities.
Unbundled Loop	A transmission channel between an end user location and LEC central office that is not a part of, or connected to, other LEC services.
Unbundled Network Element (UNE)	One of seven network elements defined by the Telecommunications Act of 1996.
Unbundled Network Element – Platform (UNE-P)	This consists of a loop and access to the ILEC Switch sold in combination to a CLEC. UNE-P service provides all network elements necessary for providing service to the customer without requiring the CLEC to combine the elements themselves through collocation.
Unbundled Port	An interface on a local switching system that is not bundled with a loop or transport facility, and provides access to and from the switch and the functionality of the local switching system.
Usage Return	A part of the claims process for usage appearing on the Daily Usage Feed. In order to facilitate investigation of errors, the CLEC is required to transmit back to Verizon usage records that are believed to contain errors along with error codes. Error codes are specified in the EMI guidelines.
Universal Service Order Code (USOC)	A 3-5 character alphanumeric code that represents a product or service.
Verification Evaluation and Testing System (VETS)	System that allows system testing on working and testable lines.
Verification and Validation	Methods used in the evaluation of activities and processes not amenable to data-driven testing, but which require verification and validation.
Verizon Repair Resolution Center (VRRC)	Receive and process trouble call reports from Verizon NJ retail customers.
Wholesale Customer Care Center (WCCC)	The organization responsible for resolving wholesale technical issues.

Term	Definition
Wired or Translated (WOT)	The date by which the translation must be loaded to the switch.
Workforce Administration/Control System (WFA/C)	The principal provisioning and maintenance and repair management and tracking system used by Verizon NJ coordination centers to deliver and maintain telecommunications services.
Workforce Administration/Dispatch In system (WFA/DI)	The principal provisioning and maintenance and repair management and tracking system used by Verizon NJ to dispatch Central Office Technicians to the field for inside wiring.
Workforce Administration/Dispatch Out system (WFA/DO)	The principal provisioning and maintenance and repair management and tracking system used by Verizon NJ to dispatch Central Office Technicians to the field for outside plant work.

This page is intentionally blank.

Appendix E

Acronym Dictionary

This page is intentionally blank.

Acronym Dictionary (Appendix E)

Acronym	Definition
AA	Assignment Administrator
ABI	Archive Billing System
ACD	Automatic Call Distributor
ACNA	Access Carrier Name Abbreviation
ACR	Assignment on Cable Record
AECN	Alternate Exchange Carrier Name
AIN	Advanced Intelligent Network
AMA	Automatic Message Accounting
ASOP	Access Service Order Processor
ASR	Access Service Request
BASS	Bell Atlantic Support System
BATC	Business Account Team Center
BCM	Billing Completion Message
B&COC	Billing and Collections Operations Center
BDT	Bill Data Tape
BOS	Billing Output Specification Standards
BPS	Bill Production Support
BRI	Basic Rate Interface Services
BTN	Billing Telephone Number
CABS	Carrier Access Billing System
CAP	Competitive Access Provider
CARE	Customer Account Record Exchange
CATC	Carrier Account Team Center
C2C	Carrier to Carrier Guidelines
CCC	Collocation Customer Care
CCI	Customer Care Indicators
CCM	Change Control Management
CCR	Change Control Record
CCOE	Cageless Collocation – Open Physical Environment
CCS	Centi Call Seconds

Acronym	Definition
CIN	Customer Identification Number
CLEC	Competitive Local Exchange Carrier
CMDS	Centralized Message Distribution System
CNE	Customer Network Engineering
COT	Central Office Technician
CO	Central Office
COG	Centralized Order Group
CPC	Circuit Provisioning Center
CPE	Customer Provided Equipment
CR	Change Request
CRIS	Customer Record Information System
CRSC	Customer Repair Service Center
CSC	Customer Service Center
CSR	Customer Service Record
CTE	CLEC Test Environment
CTS	Call Tracking System
DUF	Daily Usage Feed
DBT	Design Build Team
DD	Due Date
DDA	Due Date Availability
DDD	Desired Due Date
DID	Direct Inward Dialing
DLC	Digital Loop Carrier
DSC	Digital Services Center
DXC	Digital Cross-Connect
ECC	Exchange Carrier Code
EDI	Electronic Data Interchange
EIF	Electronic Interface Format
ELA	Exchange Layout Assigners
EMI	Exchange Message Interface
ERR	Error/Rejection Notification
ESOI	Error Service Order Interface

Acronym	Definition
EWOMS	Engineering Work Order Management System
FCC	Federal Communications Commission
FID	Field Identifier
FMC	Facilities Management Center
FPD	Facilities Pending Date
FRS	Frame Relay Service
FT	Flow-Through
GBS	General Business Service
GUI	Graphical User Interface
IFAS	Intelligent Field Access System
ILEC	Incumbent Local Exchange Carrier
IOF	Inter-Office Facilities
ISDN	Integrated Services Digital Network
ISUP	Integrated Services Digital Network User Part
IXC	Inter-Exchange Carrier
LAM	Loop Assignment Makeup
LATA	Local Access and Transport Area
LCC	Local Collocation Coordinator
LFACS	Loop Facility Assignment and Control System
LMOS	Loop Maintenance and Operating System
LNP	Local Number Portability
LPIC	Local Primary Inter-Exchange Carrier
LSC	Local Service Confirmation
LSR	Local Service Request
LSRLR	Local Service Request Local Response
LSRM	Local Service Request Manager
LUD	Local Usage Detail
MARCH	Memory Administration Recent Change History
MCCM	Metrics Change Control Management
MCRIS	Message Customer Record Information System
MDF	Main Distribution Frame

Acronym	Definition
MISOS	Minimal Input Service Order System
MLAC	Mechanized Loop Assignment Center
MLT	Mechanized Loop Test
MTP	Master Test Plan
MTS	Mechanized Translation System
NAC	Network Administration Center
NAMS	Network Analysis and Measurement System
NCI	Network Channel Interface
NDM	Network Data Mover
NDR	Network Design Review
NCSC	National Dispatch Resource Center
NFT	Non Flow-Through
NFM	Network Fault Management
NID	Network Interface Device
NJ BPU	New Jersey Board of Public Utilities
NMA	Network Monitoring and Analysis
NOC	Network Operations Center
NOCIL	Verizon Network Operations Center Information Letters
NORD	Network Operations Results Database
NPAC	Number Portability Administration Center
NSAC	Network Surveillance Assurance Center
NTG	Network Translation Group
NTM	Network Traffic Management
NTP	Network Traffic Patterns
OCN	Operating Company Number
OLSP	Online Service Provisioning
OSS	Operation Support Systems
PAC	Plant Assignment Clerk
PAWS	Provisioning Analyst Workstation System
PBX	Private Branch Exchange
PCM	Provisioning Completion Message

Acronym	Definition
PDAC	Primary Digital Access Cross-Connect
PIC	Primary Inter-exchange Carrier
PON	Purchase Order Number
POP	Pre-Ordering, Ordering, and Provisioning Domain
POTS	Plain Old Telephone Service
QA	Quality Assurance
QBC	Quality Billing Center
RBOC	Regional Bell Operating Company
RCCC	Regional CLEC Coordination Center
RCMAC	Recent Change Memory Administration Center
RCMC	Regional CLEC Maintenance Center
RETAS	Repair Trouble Administration System
RM	Request Manager
RMA	Request for Manual Assistance
RSC	Resale Service Center
RSC	Repair Service Clerks
RSID	Reseller Identification Code
SAC	Service Access Center
SARTS	Switched Access Remote Test System
SBN	Special Billing Number
SBTN	Sub-account Billing Telephone Number
SCC	Switching Control Center
SCP	Service Control Point
SCOPE	Secured Collocation – Open Physical Environment
SDE	Service Delivery Engineer
SDM	Service Delivery Method
SES	Software Engineering Services
SID	Service Issue Date
SLC	Subscriber Loop Carrier
SMARTS	Service Order Management Administrative Report Tracking System
SME	Subject Matter Expert

Acronym	Definition
SOAC	Service Order Analysis and Control
SONET	Synchronous Optical Network
SOP	Service Order Processor
SORD	Service Order Results Database
SPC	Software Provisioning Center
SR	Service Request
SRT	System Readiness Test
SS7	Signaling System 7
SSNS	Service Order Negotiation System
SSP	Service Switching Point
STM	Signaling Traffic Management
STP	Service Transfer Point
TA	Translation Administrators
TB	Technical Bulletins
TCAP	Transaction Capabilities Application Part
TEO	Telephone Equipment Orders
TTG	Test Transaction Generator
TIRKS	Trunk Inventory Record Keeping System
TISOC	Telecom Industry Services Operations Center
TN	Telephone Number.
TMS	Tape Management System
TR	Technical Releases
TSFT	Technical Solutions Facilitation Team
UNE	Unbundled Network Element
UNE-P	Unbundled Network Element – Platform
USOC	Universal Service Order Code
VCS	Verizon Connection Solutions
VETS	Verification Evaluation and Testing System
Verizon NJ	Verizon New Jersey
VIPS	Verizon Information Processing Services
VRRC	Verizon Repair Resolution Center

Acronym	Definition
VSP	Verizon Service Publications
WCCC	Wholesale Customer Care Center
WFA/C	Workforce Administration/Control
WFA/DI	Workforce Administration/Dispatch In
WFA/DO	Workforce Administration/Dispatch Out
WMD	Wholesale Metrics Development
WOT	Wired or Translated
WPA	Wholesale Performance Assurance
WTN	Working Telephone Number
xDSL	Digital Subscriber Loop