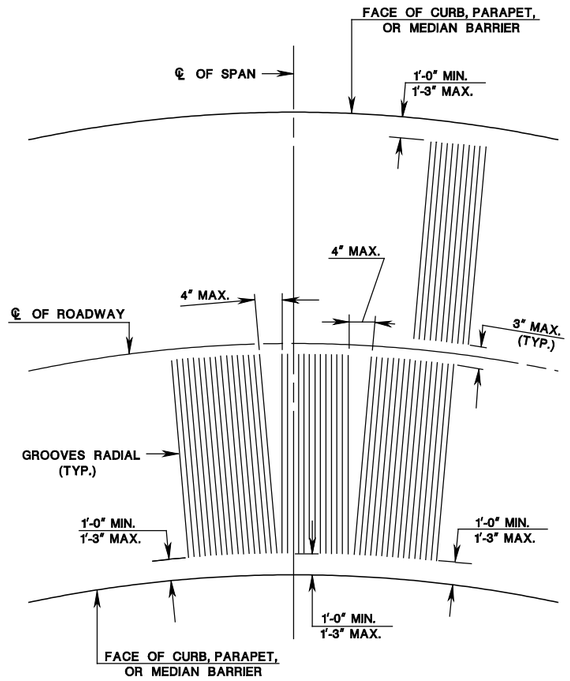

SAWCUT GROOVING FOR BRIDGE DECKS ON CURVED ALIGNMENT

BCD-507-5.1

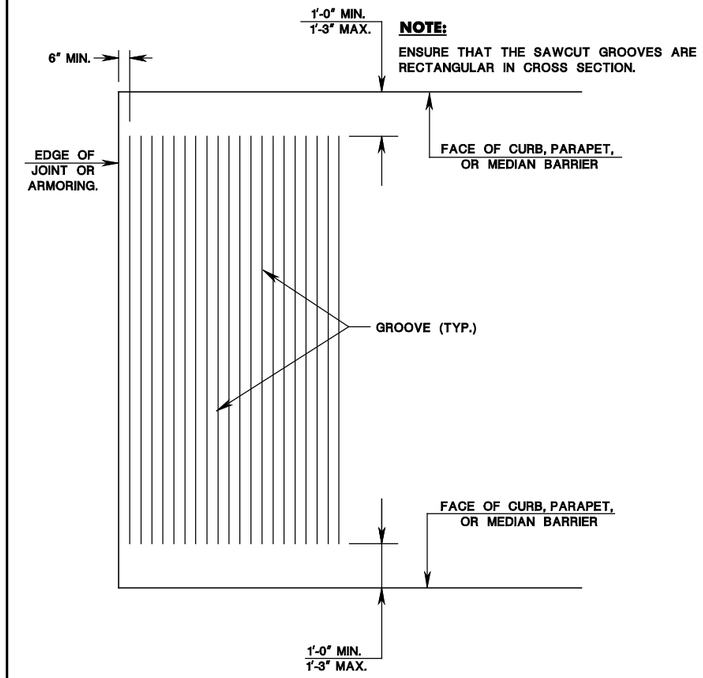

NOTE:

ENSURE THAT THE SAWCUT GROOVES ARE RECTANGULAR IN CROSS SECTION.

SAWCUT GROOVING FOR BRIDGE DECKS

BCD-507-5.2

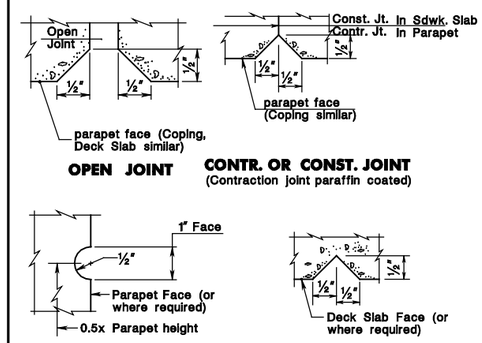

OPEN JOINT **CONTR. OR CONST. JOINT** (Contraction joint paraffin coated)

HORIZONTAL DUMMY JOINT **VERTICAL DUMMY JOINT**

DETAILS OF PARAPET AND DECK SCORING

BCD-507-5.5

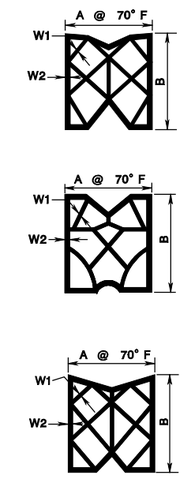

A = Compressed width of sealer at 70° F.
B = Compressed height of sealer at 70° F.
W1 = Interior membrane minimum thickness.
W2 = Exterior membrane minimum thickness.

PREFOR. ELASTOMERIC COMPRESSION SEALER NOMINAL SIZE (IN.)	A (IN.)	B (IN.)	W1 (min.) (IN.)	W2 (min.) (IN.)
1¾" X 1¾" (1)	1	(2)	1/16	5/32
2½" X 2½" (1)	1⅝	(2)	5/32	3/16

NOTE:

1. The nominal height of compression seals may vary based on manufacturer's specifications. The height may exceed the nominal manufacturer's sealer height by not more than ¼".
2. Dimension "B" varies depending on the joint manufacturer. The depth of embedment of the compression seal in the joint is to be set by the fabricator and is equal to the compressed seal height plus ½" (± ⅛").
3. Conform all preformed elastomeric compression seals to the material requirements of the NJDOT Standard Specifications for Road and Bridge Construction.

DETAILS OF PREFORMED ELASTOMERIC JOINT SEALER

BCD-507-5.7

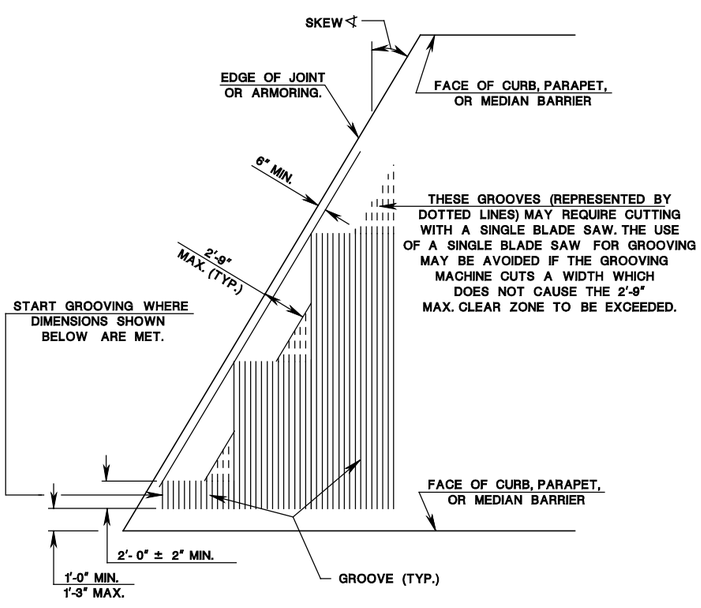

SAWCUT GROOVING FOR SKEWED BRIDGE DECKS

BCD-507-5.3

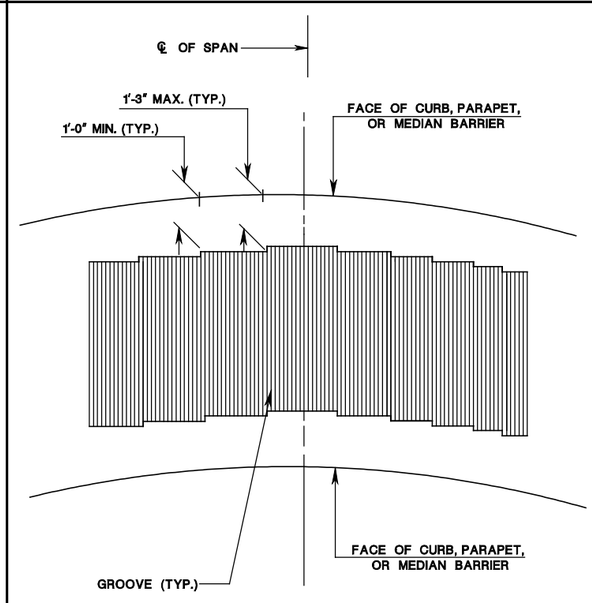

SAWCUT GROOVING FOR BRIDGE DECKS ON TIGHT CURVED ALIGNMENT

BCD-507-5.4

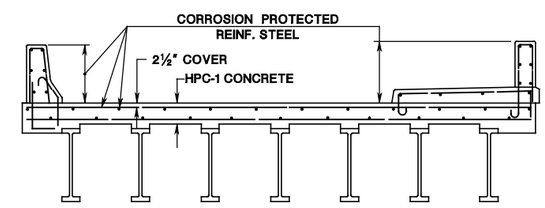

ONE COURSE CONCRETE DECK SLAB

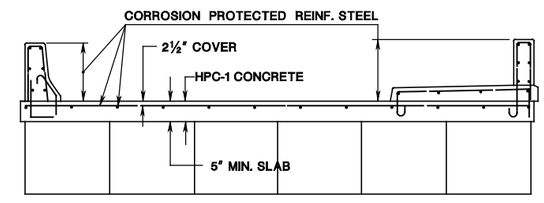

CONCRETE OVERLAY SLAB ON PRESTRESSED CONCRETE VOIDED SLAB OR BOX BEAMS

NOTE:

ENSURE THAT ALL REINFORCEMENT STEEL IN PARAPETS AND SIDEWALKS IS CORROSION PROTECTED.

BRIDGE DECK CONSTRUCTION PROTECTIVE SYSTEMS (NEW BRIDGE DECKS)

BCD-507-5.6

CONCRETE BRIDGE DECKS

N.T.S.

BCD-507-5

NEW JERSEY DEPARTMENT OF TRANSPORTATION
BUREAU OF STRUCTURAL ENGINEERING

BRIDGE CONSTRUCTION DETAILS

BDC/BD-01-ORIGINAL SHEET
pen table= \\NJDOT\PBWB\V8workers\NJDOT\PBWB\Projects\NJDOT\PBWB\Joint\JTBLs\Non-Roadway\bridge-55257name.tbl
scale=0.778016:1.000000
date=28-SEP-2016 14:14
ID=TP2VUJ.
file=