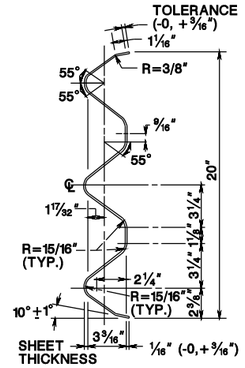

SECTION C–C

THRIE BEAM RAIL ELEMENT

RAIL ELEMENT TO BE SUPPLIED IN LENGTHS OF 13'-6½" OR 25'-0¼"

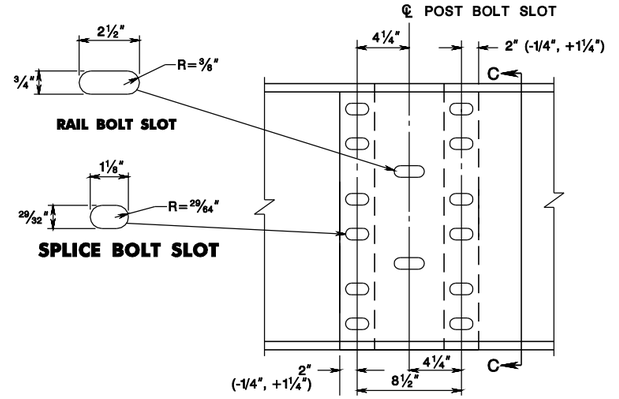

ELEVATION

THRIE BEAM RAIL SPLICE

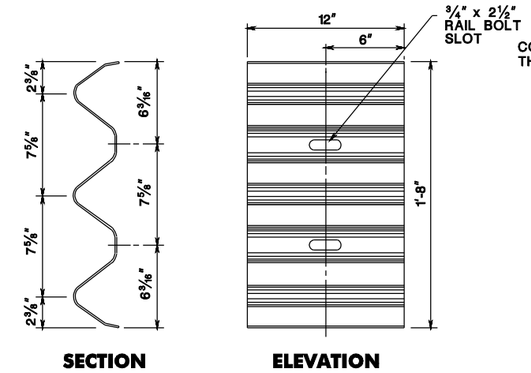

SECTION **ELEVATION**

BACKUP PLATE AT NON–SPLICE POSTS

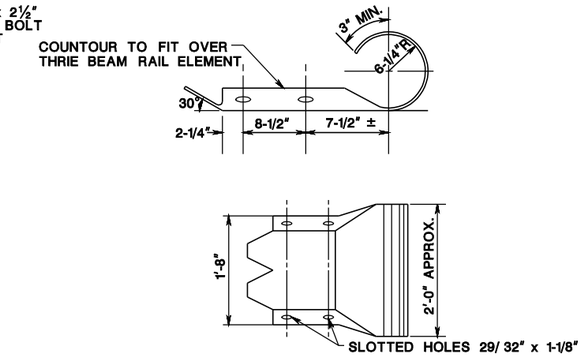

THRIE BEAM END SECTION (ROUNDED) SEE NOTE 5

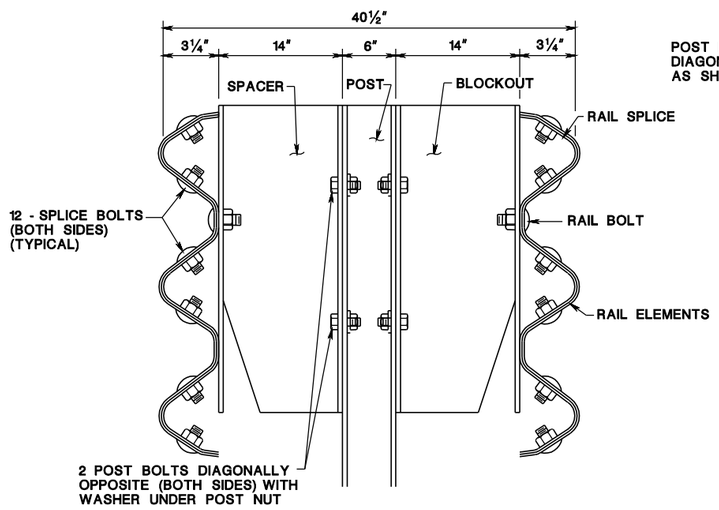

DUAL FACED POST ASSEMBLY

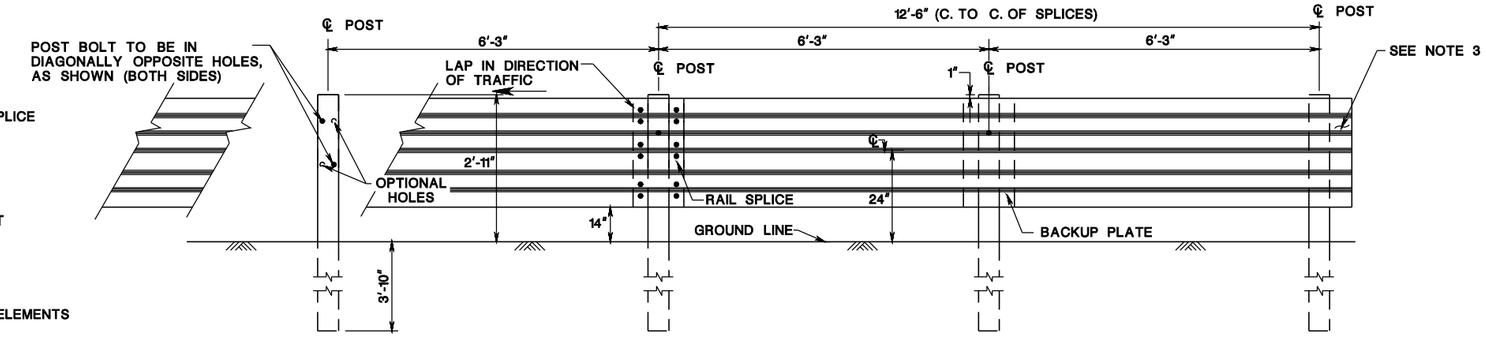

MODIFIED THRIE BEAM GUIDE RAIL, DUAL FACED

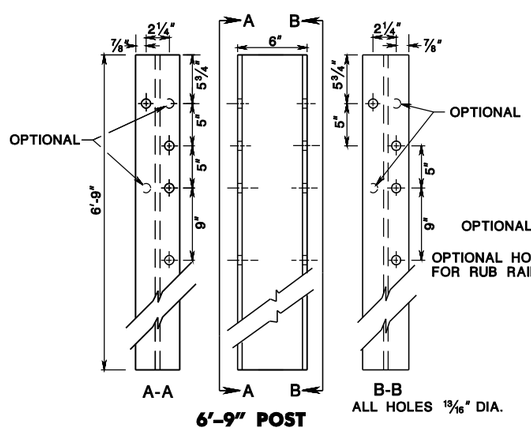

6'–9" POST

W6X9 OR W6X8.5 STRUCTURAL SHAPE

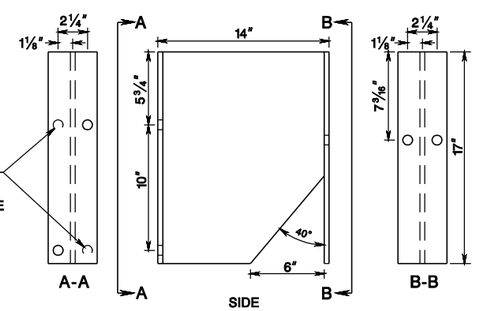

17" BLOCKOUT

M14X18 STRUCTURAL SHAPE
OR
W14X22 STRUCTURAL SHAPE

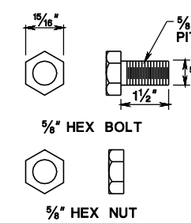

POST NUT AND BOLT

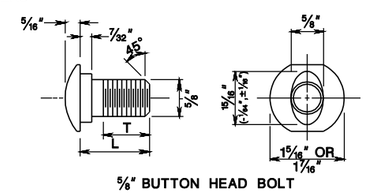

TYPE	L	MIN. THREAD LENGTH (T)
SPLICE	1¼"	FULL LENGTH THREAD
RAIL	2"	1½"

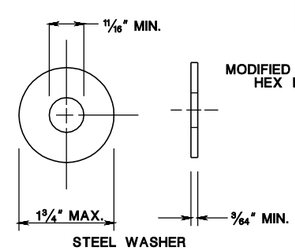

WASHER

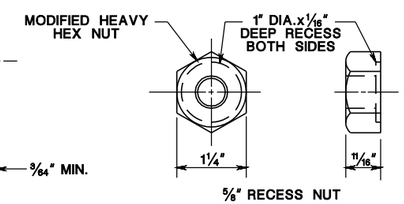

SPLICE AND RAIL NUT AND BOLT

NOTES:

1. ALL DIMENSIONS ARE SUBJECT TO MANUFACTURING TOLERANCES.
2. RAIL ELEMENTS TO BE FURNISHED SHOPCURVED, CONCAVE, OR CONVEX, FOR RADII BETWEEN 20 FEET AND 150 FEET.
3. USE CD-609-7.5 TELESCOPING GUIDE RAIL END TERMINAL CONNECTION UNLESS THE PLANS CALL FOR ANOTHER TYPE OF END TREATMENT.
4. USE A 25' GUIDE RAIL TRANSITION WHERE A TELESCOPING GUIDE RAIL END TREATMENT IS TO BE ATTACHED TO THE END OF MODIFIED THRIE BEAM, DUAL FACED.
5. USE THRIE BEAM END SECTION (ROUNDED) ON END OF RAIL ELEMENT WHERE DUAL FACED MODIFIED THRIE BEAM ENDS AND SINGLE FACED MODIFIED THRIE BEAM BEGINS.

MODIFIED THRIE BEAM GUIDE RAIL, DUAL FACED

N.T.S.

CD-609-19

NEW JERSEY DEPARTMENT OF TRANSPORTATION

CONSTRUCTION DETAILS

CD-609-19.1

ID=TP2VLLL date=28-SEP-2016 11:09 scale=63.073306:1.000000 pen table=\\NJDOTWS\Projects\NJDOTRTW3\Vdgsystem\NJDOTEng\plot\TBLs\Roadway\Details_11x17.tbl
BDC18D-01-ORIGINAL SHEET
file=