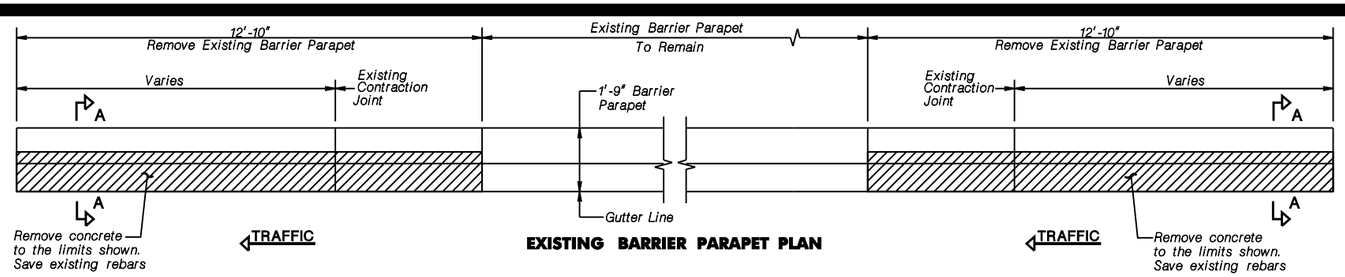

EXISTING BARRIER PARAPET PLAN

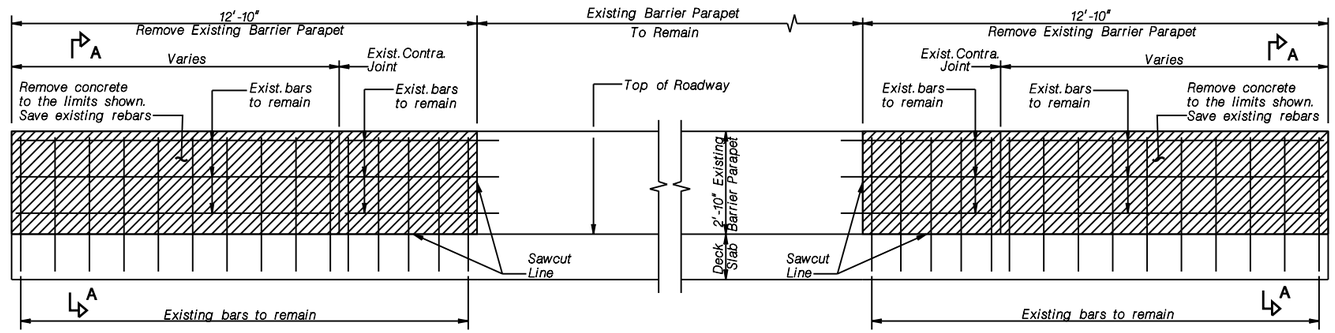

EXISTING BARRIER PARAPET ELEVATION

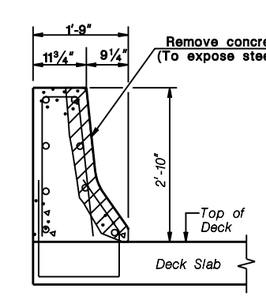

SECTION: A–A

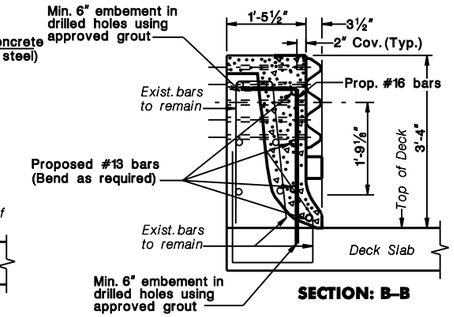

SECTION: B–B

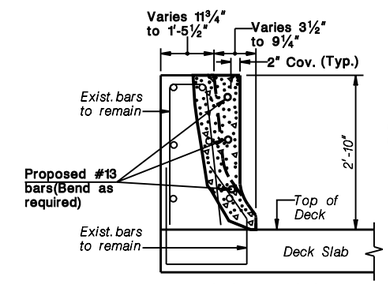

SECTION: C–C

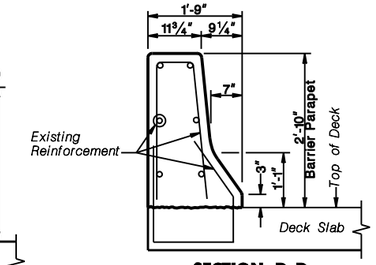

SECTION: D–D

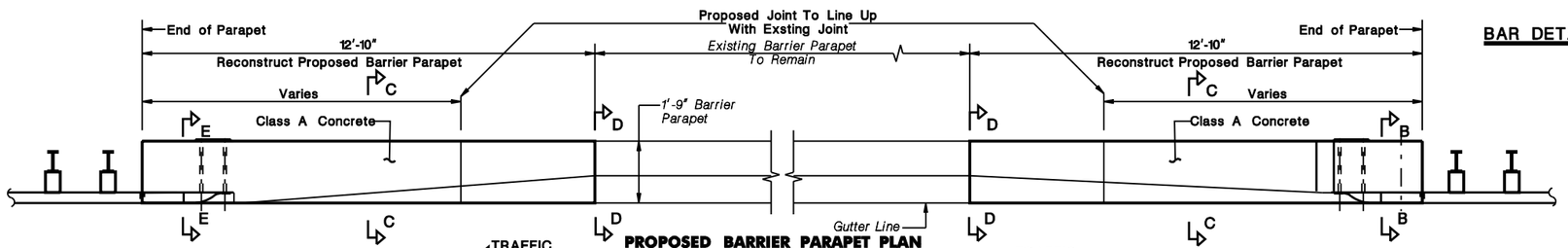

PROPOSED BARRIER PARAPET PLAN

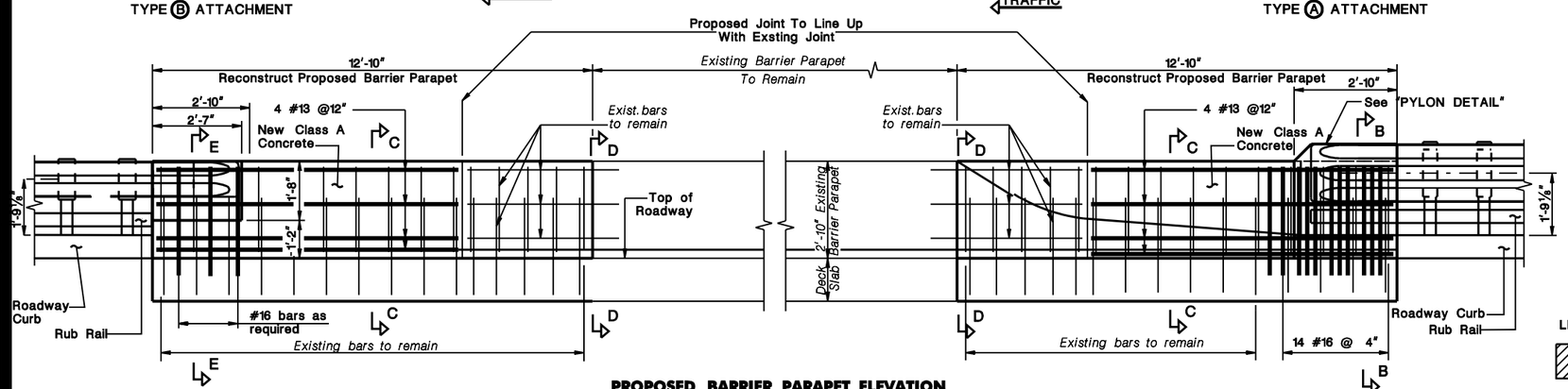

PROPOSED BARRIER PARAPET ELEVATION

BAR DETAILS

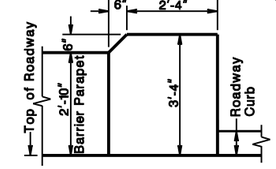

PYLON DETAIL

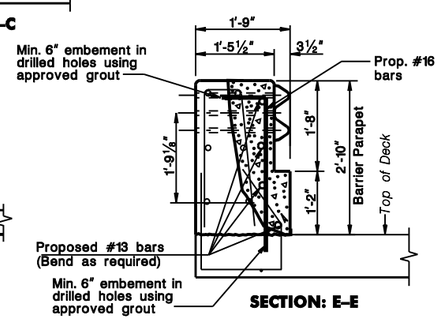

SECTION: E–E

NOTES:

1. Include cost for constructing transition barrier in the cost for the item, "BARRIER PARAPET MODIFICATIONS". This includes but not limited to, saw cutting, removal of concrete, drilling, grouting, new reinforcement and concrete.

2. Refer to CD-609-14 for guide rail attachment and details.

LEGEND

- REMOVE
- RECONSTRUCT
- PROPOSED CLASS A CONCRETE

BCD-609-2.1

BARRIER PARAPET MODIFICATION FOR GUIDE RAIL (SHEET 2 OF 4)

N.T.S.

BCD-609-2

NEW JERSEY DEPARTMENT OF TRANSPORTATION
BUREAU OF STRUCTURAL ENGINEERING

BRIDGE CONSTRUCTION DETAILS

146B
146

GUIDE RAIL ATTACHMENT – EXISTING STRUCTURES
NEW JERSEY BARRIER SHAPE PARAPET ON BRIDGE DECK WITH ROADWAY CURBING ON APPROACH

BCD-609-01-ORIGINAL SHEET

pen table=.
scale=.
date=.
ID=.
file=.