CONTINUITY DESIGN FOR LIVE LOAD, PC I–BEAM DIAPHRAGM REINFORCEMENT (SHEET 2 OF 2)	ISSUED: 2009	PLATE 3.10–17

ALSO SEE PLATES
3.10-15
3.10-16
3.10-18

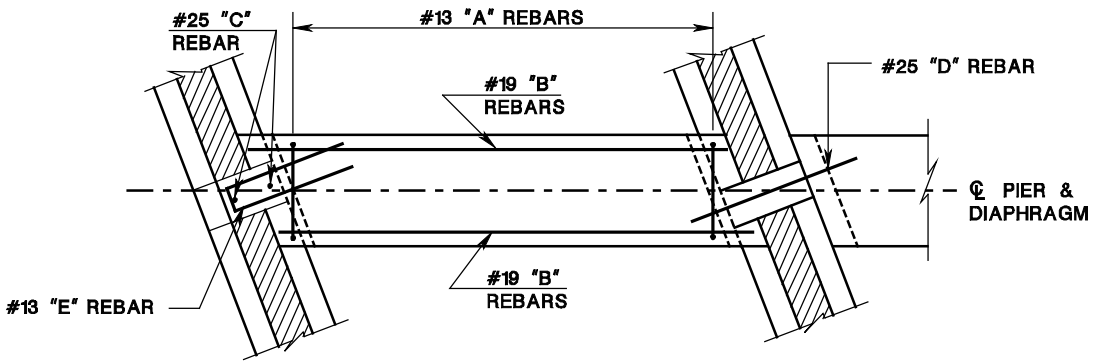

SECTION D-D

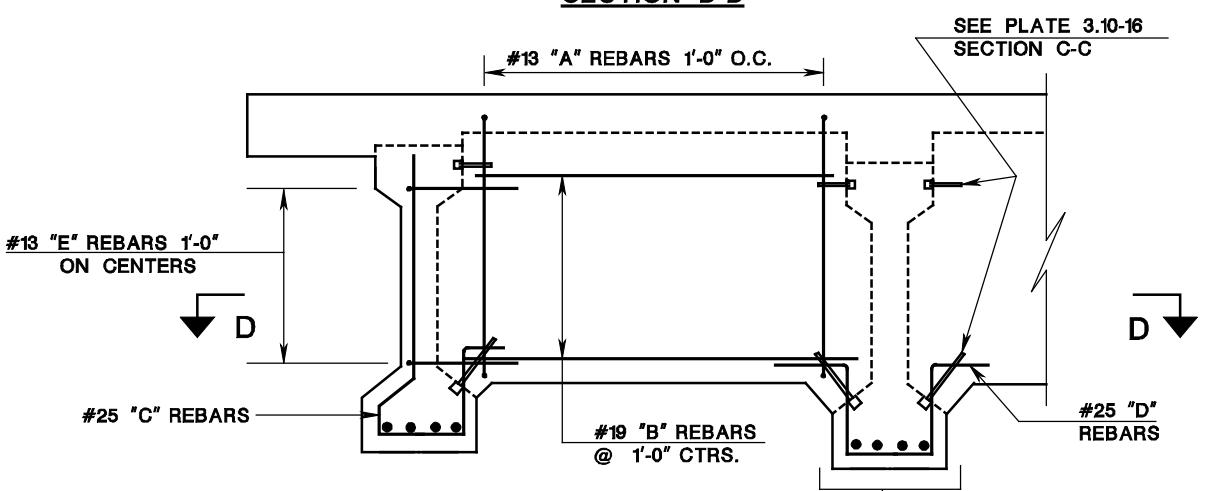

SECTIONAL ELEVATION

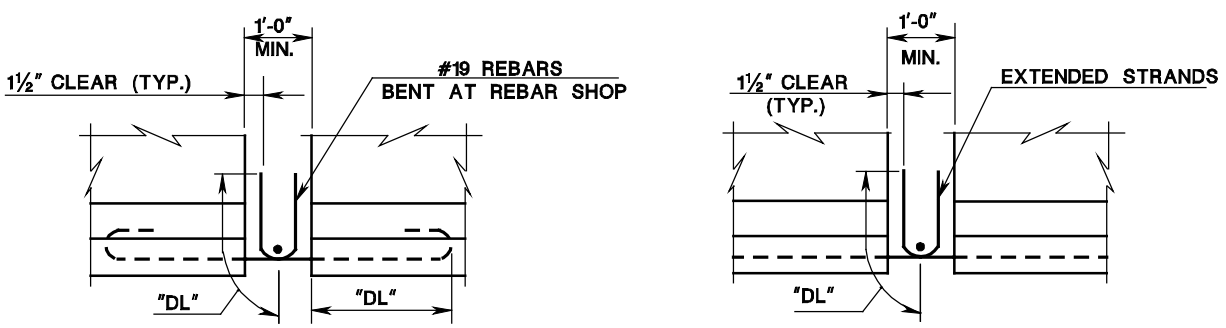

DETAIL "X" DETAIL "Y"

POSITIVE RESTRAINT MOMENT CONNECTION

NOTE: DETAIL "X" OR "Y" (CONTRACTOR'S OPTION) TO BE SHOWN ON SHOP DRAWINGS.

NOTE TO DESIGNER: BOTH DETAILS TO BE SHOWN ON PLANS TOGETHER WITH DIMENSION "DL" (DEVELOPMENT LENGTH) AND NUMBER OF REBARS OR STRANDS AS REQUIRED BY DESIGN.