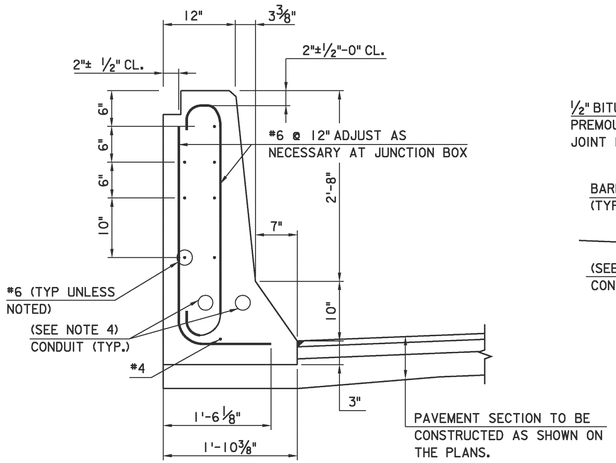

SECTION A-A
SCALE: 1" = 1'-0"

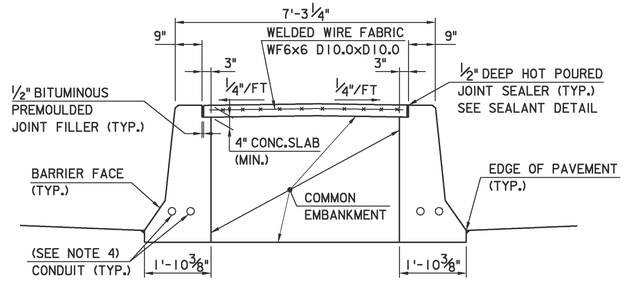

SECTION C-C
SCALE: ½" = 1'-0"

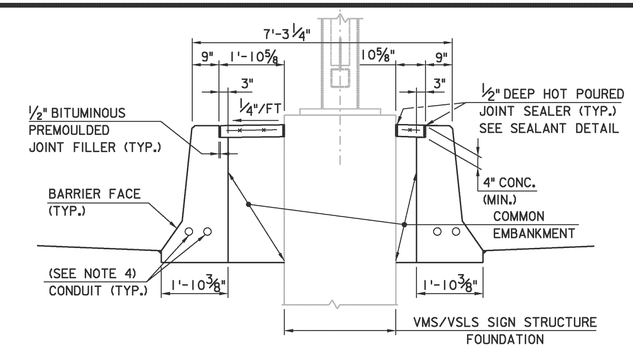

SECTION D-D
SCALE: ½" = 1'-0"

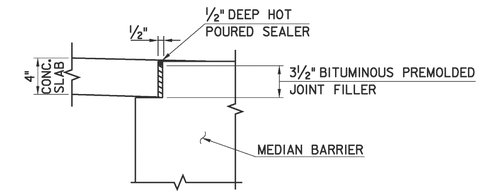

SEALANT DETAIL
N.T.S

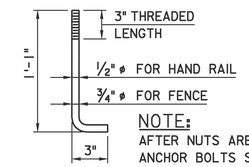

NOTE:
AFTER NUTS ARE TIGHTENED, ANCHOR BOLTS SHALL NOT PROJECT MORE THAN ⅜" ABOVE NUT.

ANCHOR BOLT DETAIL
N.T.S.

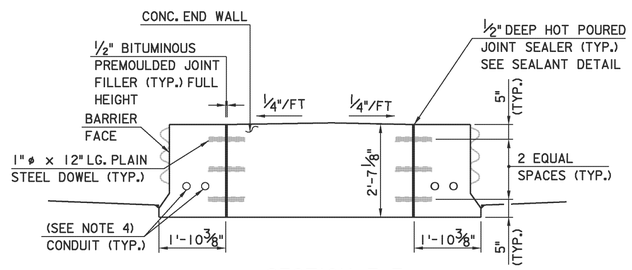

SECTION E-E

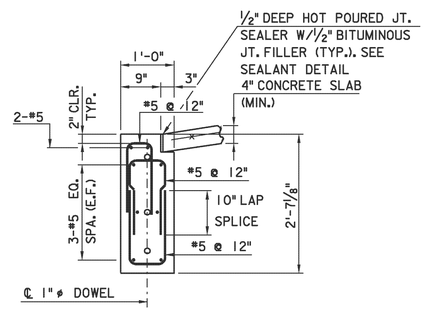

END WALL
SECTION F-F
SCALE: ¾" = 1'-0"

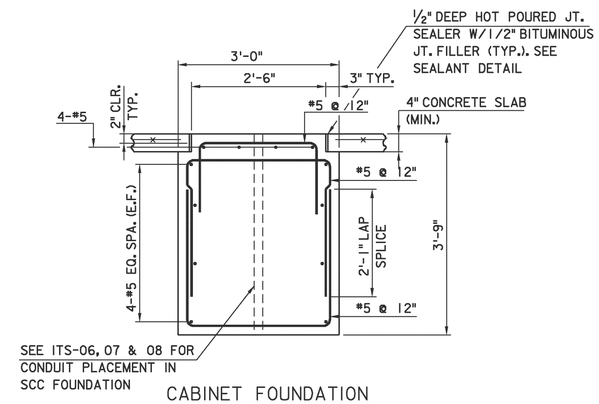

CABINET FOUNDATION
SECTION G-G
SCALE: ¾" = 1'-0"

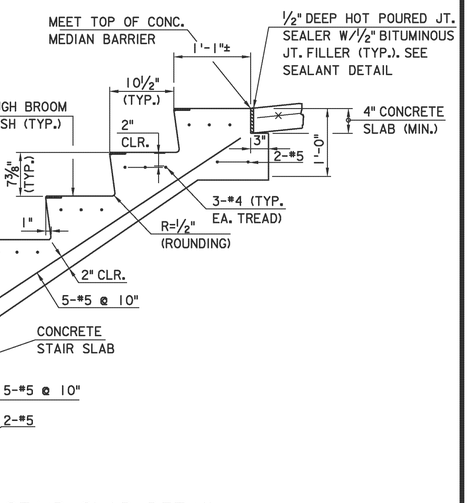

CAST ALUMINUM TREAD NOSING (ITEM 2.1), SET FLUSH WITH RISER AND TREAD OF EA. STEP (TYP.)

STAIR SLAB DETAIL
SCALE: 1" = 1'-0"

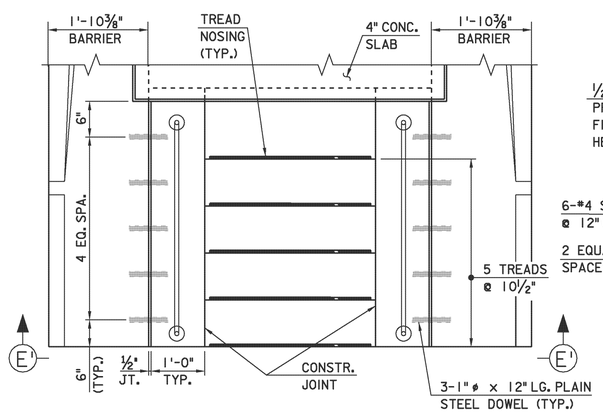

END STAIRWELL PLAN
SCALE: ¾" = 1'-0"

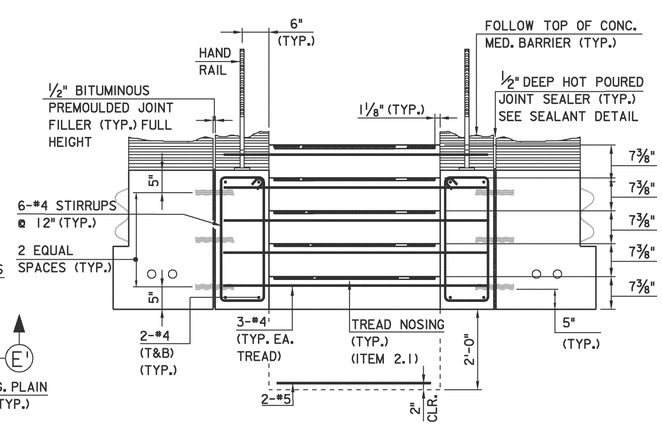

SECTION E'-E'
SCALE: ¾" = 1'-0"

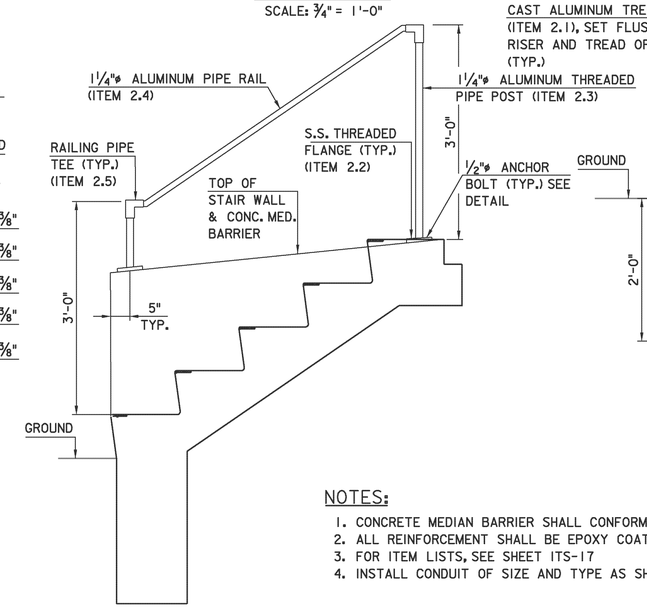

HANDRAIL DETAIL
SCALE: 1" = 1'-0"

NOTES:

1. CONCRETE MEDIAN BARRIER SHALL CONFORM TO SECTION 508.
2. ALL REINFORCEMENT SHALL BE EPOXY COATED.
3. FOR ITEM LISTS, SEE SHEET ITS-17
4. INSTALL CONDUIT OF SIZE AND TYPE AS SHOWN ON THE PLANS.

	BY	DATE
MADE	EMG	08/2010
TRACED	EG	08/2010
CHECKED	GH	08/2010
SUPERVISED	RJS	08/2010

0 ½ 1 2 3 4
ORIGINAL SIZE IN INCHES

APP.	NO.	DATE	REVISION
	0	08/2010	ORIGINAL DRAWING

NEW JERSEY TURNPIKE AUTHORITY
NEW JERSEY TURNPIKE
VMS EQUIPMENT MEDIAN – 2

HNTB 145 RT. 46 WEST, SUITE 400, WAYNE, NJ 07470 – COA# 24GA28000700
ANTHONY L. BARTELLO
New Jersey Professional Engineer License No. GE 45842

STANDARD DRAWING
ITS–18

CONTRACT NO. SHEET NO. OF

DATE: 20-SEP-2010
USER: emgrill
FILE: \\ffiw00\cadd\42284_Standard_Drawings_2009\NJTA-SD ITS-18.dgn