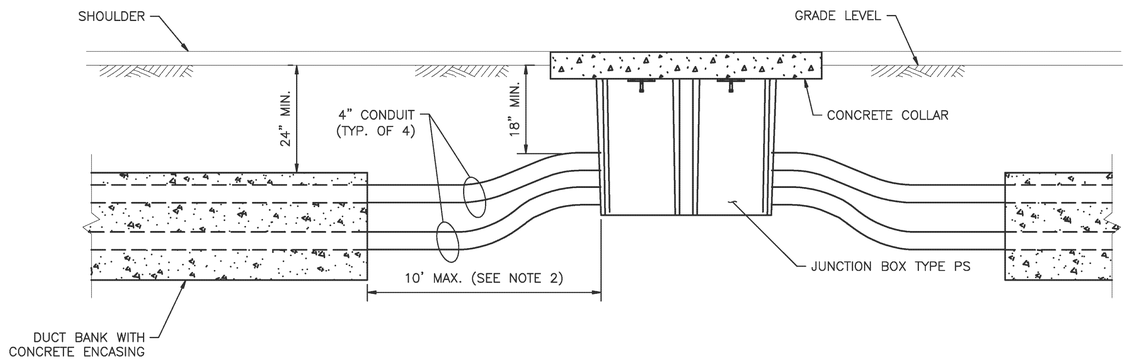

SECTION B–B ELEVATION VIEW

N.T.S.

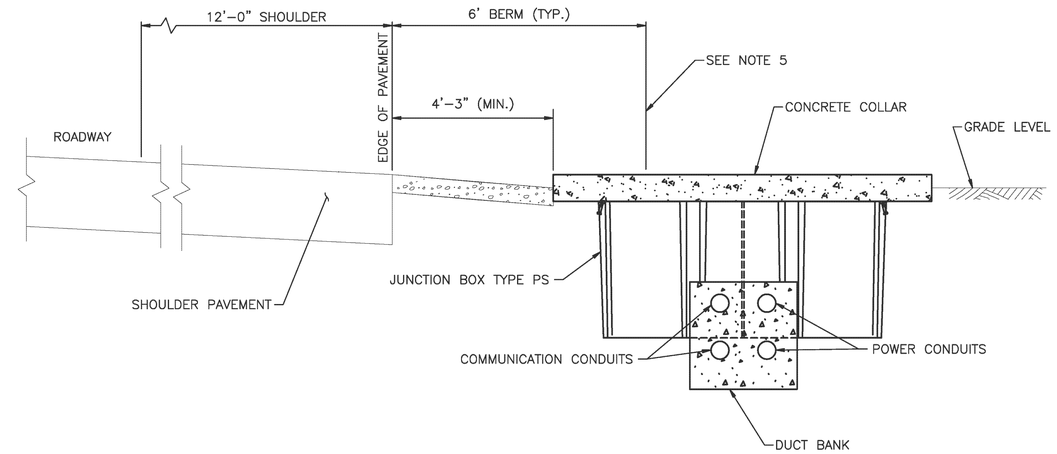

SECTION A–A

N.T.S.

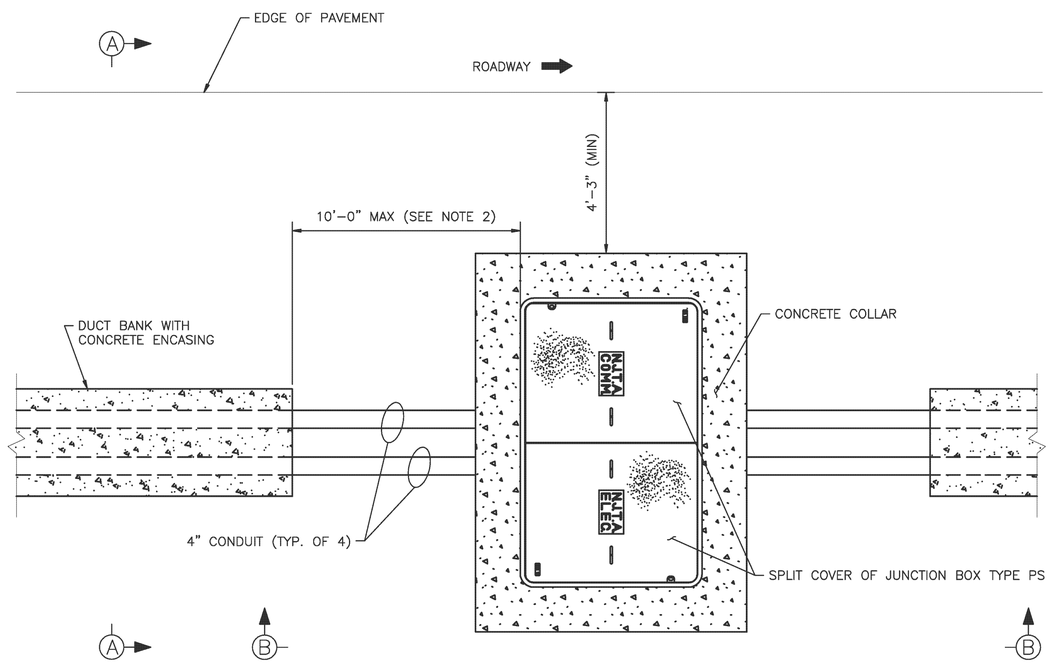

PLAN VIEW

N.T.S.

NOTES:

1. JUNCTION BOX AND DUCT BANK SHALL BE INSTALLED AT A MINIMUM OF ONE (1) FT. BEHIND THE GUIDE RAIL,WHERE PRESENT.
2. MAXIMUM DISTANCE FROM THE JUNCTION BOX AND THE CONCRETE ENCASING SHALL BE 10 FT. MAX. REDUCE WHERE FIELD CONDITIONS ALLOW.
3. SEE STANDARD DRAWINGS ITS–27 AND ITS–28 FOR DUCT BANK AND JUNCTION BOX DETAILS.
4. INSTALL PULL CORDS IN ALL CONDUITS BETWEEN JUNCTION BOXES.
5. BERM WIDTH IS TYPICAL, SEE CONTRACT PLANS FOR ACTUAL PLACEMENT.

	BY	DATE
MADE	AG	08/2010
TRACED	GS	08/2010
CHECKED	MS	08/2010
SUPERVISED	ALB	08/2010

0 ½ 1 2 3 4

ORIGINAL SIZE IN INCHES

APP.	NO.	DATE	REVISION
	0	08/2010	ORIGINAL DRAWING

NEW JERSEY TURNPIKE AUTHORITY

NEW JERSEY TURNPIKE

DUCT BANK AND JUNCTION BOX TYPE PS DETAILS

HNTB 145 RT. 46 WEST, SUITE 400 WAYNE, NJ 07470 – COA# 24GA28000700

ANTHONY L. BARTELLO

N.J.P.E. License No. GE 45842

STANDARD DRAWING

ITS–29

CONTRACT NO. SHEET NO. OF

ACAD FILE NAME: NJTA–SD ITS–29.dwg Layout: .Layout1