State of New Jersey

Department of Transportation

STANDARD ROADWAY CONSTRUCTION – TRAFFIC CONTROL – BRIDGE CONSTRUCTION DETAILS

2001

(Metric Units)

BDC01D-4 – ORIGINAL SHEET

TABLE OF CONTENTS – SHEET 1

SHEET #	DESCRIPTION
1	COVER SHEET
2	TABLE OF CONTENTS – SHEET 1
3	TABLE OF CONTENTS – SHEET 2
	ROADWAY CONSTRUCTION DETAILS
4	INDEX FOR STANDARD ROADWAY CONSTRUCTION DETAILS (Index Sheet 1)
5	INDEX FOR STANDARD ROADWAY CONSTRUCTION DETAILS (Index Sheet 2)
6	INDEX FOR STANDARD ROADWAY CONSTRUCTION DETAILS (Index Sheet 3)
7	CD–107–1 NOISE CONTROL
8	CD–202–1 CONCRETE JOINT REMOVAL, MILLING AND RUMBLE STRIPS
9	CD–203–1 POROUS FILL AND EMBANKMENT
10	CD–212–1 TEMPORARY SOIL EROSION AND SEDIMENT CONTROL MEASURES
11	CD–212–2 TEMPORARY SOIL EROSION AND SEDIMENT CONTROL MEASURES
12	CD–212–3 TEMPORARY SOIL EROSION AND SEDIMENT CONTROL MEASURES
13	CD–306–1 CONTRACTION JOINTS IN CONCRETE BASE COURSE
14	CD–405–1 CONCRETE SURFACE COURSE
15	CD–405–2 CONCRETE SURFACE COURSE JOINT DETAILS
16	CD–405–3 CONCRETE SURFACE COURSE JOINT DETAILS
17	CD–405–4 TIE BOLTS AND TIE BARS
18	CD–405–5 TRANSVERSE EXPANSION JOINT TYPE A
19	CD–405–6 BRIDGE APPROACH SLABS AND TRANSITION SLABS ADJOINING ..
20	CD–405–7 BRIDGE APPROACH SLABS AND TRANSITION SLABS ADJOINING ..
21	CD–601–1 UNDERDRAINS
22	CD–602–1 PIPE END SECTIONS
23	CD–602–2 CROSS DRAIN TRENCH CONSTRUCTION
24	CD–603–1 INLET GENERAL DETAILS
25	CD–603–2 INLETS, TYPE A, B & C
26	CD–603–3 INLETS, TYPE B1, B2, & B, B1 & B2 MODIFIED
27	CD–603–4 INLETS, TYPE E, E1, E2 & ES
28	CD–603–5 INLETS, TYPE D1 & D2
29	CD–603–6 CAST IRON EXTENSION FRAMES FOR EXISTING INLETS
30	CD–603–7 CAST IRON EXTENSION RINGS FOR EXISTING MANHOLES
31	CD–603–8 MANHOLES
32	CD–603–9 PRECAST MANHOLES
33	CD–604–1 CONCRETE SLOPE GUTTERS
34	CD–605–1 CONCRETE AND GRANITE CURB
35	CD–605–2 BARRIER CURB AND VERTICAL CURB DETAILS
36	CD–605–3 BARRIER CURB
37	CD–607–1 PUBLIC SIDEWALK AND CURB RAMPS
38	CD–607–2 DRIVEWAYS
39	CD–608–1 CONCRETE AND HMA ISLANDS
40	CD–610–1 CONCRETE HEADWALLS AND APRONS
41	CD–610–2 CONCRETE CULVERTS
42	CD–611–1 MONUMENTS AND MONUMENT BOXES

SHEET #	DESCRIPTION
43	CD–612–1 BEAM GUIDE RAIL
44	CD–612–2 BEAM GUIDE RAIL, DUAL–FACED
45	CD–612–3 RUB RAIL
46	CD–612–4 BEAM GUIDE RAIL ANCHORAGES
47	CD–612–5 SLOTTED GUIDE RAIL TERMINALS AND EXTRUDER TERMINALS
48	CD–612–6 CONTROLLED RELEASE TERMINALS
49	CD–612–7 MEDIAN GUIDE RAIL TREATMENT
50	CD–612–8 BEAM GUIDE RAIL END TREATMENT
51	CD–612–9 BEAM GUIDE RAIL ATTACHMENTS
52	CD–612–10 BEAM GUIDE RAIL ATTACHMENTS
53	CD–612–11 BEAM GUIDE RAIL ATTACHMENTS
54	CD–612–12 THRIE BEAM AND W BEAM TERMINAL CONNECTOR
55	CD–612–13 BEAM GUIDE RAIL ATTACHMENTS
56	CD–612–14 BEAM GUIDE RAIL ATTACHMENTS
57	CD–612–15 BEAM GUIDE RAIL ATTACHMENTS
58	CD–612–16 BEAM GUIDE RAIL ATTACHMENTS
59	CD–614–1 CHAIN–LINK FENCE
60	CD–614–2 CHAIN–LINK AND SNOW FENCE
61	CD–616–1 SLOPE AND CHANNEL PROTECTION
62	CD–617–1 TRAFFIC CONTROL DEVICES
63	CD–617–2 TRAFFIC CONTROL DEVICES AND DETAILS
64	CD–617–3 PRECAST CONCRETE CURB, CONSTRUCTION BARRIER, TYPE 1
65	CD–617–4 PRECAST CONCRETE CURB, CONSTRUCTION BARRIER, TYPE 4 (ALT. A)
66	CD–617–5 PRECAST CONCRETE CURB, CONSTRUCTION BARRIER, TYPE 4 (ALT. B)
67	CD–617–6 CONSTRUCTION SIGNS
68	CD–617–7 CONSTRUCTION SIGNS
69	CD–617–8 CONSTRUCTION IDENTIFICATION SIGN
70	CD–617–9 CONSTRUCTION IDENTIFICATION SIGNS
71	CD–618–1 PLOWABLE PAVEMENT REFLECTOR LOCATION DETAILS
72	CD–618–2 PLOWABLE PAVEMENT REFLECTOR LOCATION DETAILS
73	CD–618–3 PLOWABLE PAVEMENT REFLECTOR LOCATION DETAILS
74	CD–619–1 SIGNS
75	CD–619–2 SIGNS
76	CD–619–3 SIGNS
77	CD–619–4 STEEL U–POST SIGN SUPPORTS
78	CD–619–5 STEEL U–POST SIGN SUPPORTS
79	CD–619–6 STEEL U–POST SIGN SUPPORTS
80	CD–619–7 BREAKAWAY SIGN SUPPORTS FOR GROUND MOUNTED SIGNS
81	CD–619–8 BREAKAWAY SIGN SUPPORTS FOR GROUND MOUNTED SIGNS
82	CD–619–9 BREAKAWAY SIGN SUPPORTS FOR GROUND MOUNTED SIGNS
83	CD–619–10 BREAKAWAY SIGN SUPPORTS FOR GROUND MOUNTED SIGNS
84	CD–619–11 BREAKAWAY SIGN SUPPORTS FOR GROUND MOUNTED SIGNS
85	CD–619–12 BREAKAWAY SIGN SUPPORTS FOR GROUND MOUNTED SIGNS
86	CD–619–13 NON–BREAKAWAY SIGN SUPPORTS FOR GROUND MOUNTED SIGNS

SHEET #	DESCRIPTION
87	CD–619–14 NON–BREAKAWAY SIGN SUPPORTS FOR GROUND MOUNTED SIGNS
88	CD–619–15 NON–BREAKAWAY SIGN SUPPORTS FOR GROUND MOUNTED SIGNS
89	CD–620–1 DELINEATORS
90	CD–809–1 TOPSOIL STABILIZATION
91	CD–813–1 PLANTING
92	CD–814–1 NONVEGETATIVE SURFACE DETAILS
	TRAFFIC CONTROL DETAILS
93	INDEX SHEET FOR STANDARD TRAFFIC CONTROL DETAILS
94	TCD–1 LEGEND & GENERAL NOTES
95	TCD–2 SIGHT DIST., TAPER LENGTH, ESCAPE RAMP, CONST. BARRIER DETAIL ..
96	TCD–3 2 LANES, UNDIVIDED, LANE & SHOULDER CLOSING
97	TCD–4 2 LANES, UNDIVIDED, LANE & SHOULDER CLOSING W/FLAGGING
98	TCD–5 2 LANES, UNDIVIDED, INTERSECTION
99	TCD–6 2 LANES, UNDIVIDED, INTERSECTION
100	TCD–7 2 LANES, UNDIVIDED, INTERSECTION
101	TCD–8 4 LANES, UNDIVIDED, RIGHT LANE & SHOULDER CLOSING
102	TCD–9 4 LANES, UNDIVIDED, LEFT LANE & SHOULDER CLOSING
103	TCD–10 4 LANES, UNDIVIDED, 2 LANES & SHLD. ONE DIRECTION CLOSING
104	TCD–11 4 LANES, UNDIVIDED, INTERSECTION
105	TCD–12 4 LANES, UNDIVIDED, INTERSECTION
106	TCD–13 4 LANES, UNDIVIDED, INTERSECTION
107	TCD–14 4 & 6 LANES, DIVIDED, RIGHT LANE & SHOULDER CLOSING
108	TCD–15 4 & 6 LANES, DIVIDED, LEFT LANE CLOSING
109	TCD–16 6 LANES, DIVIDED, (LEFT & RIGHT) TWO LANE CLOSING
110	TCD–17 6 LANES, DIVIDED, CENTER LANE CLOSURE .....
111	TCD–18 DIVIDED, EXIT RAMP CONSTRUCTION (LEFT & RIGHT)
112	TCD–19 DIVIDED, EXIT RAMP CONSTRUCTION (LEFT & RIGHT) W/DECEL LANE
113	TCD–20 DIVIDED, ENTRANCE RAMP CONSTRUCTION (LEFT & RIGHT)
114	TCD–21 DIVIDED, ENTRANCE RAMP CONSTRUCTION (LEFT & RIGHT) W/ACCEL
115	TCD–22 MULTI–LANE ROAD MOVING OPERATION

ABBREVIATIONS

CD = ROADWAY CONSTRUCTION DETAILS
TCD = TRAFFIC CONTROL DETAILS
BCD = BRIDGE CONSTRUCTION DETAILS

BDC01D-4 – ORIGINAL SHEET

TABLE OF CONTENTS – SHEET 2

SHEET #	DESCRIPTION	SHEET #	DESCRIPTION	SHEET #	DESCRIPTION
	BRIDGE CONSTRUCTION DETAILS				
116	INDEX SHEET FOR STANDARD BRIDGE CONSTRUCTION DETAILS				
117	BCD–1A BRIDGE DECK REHABILITATION WITH CONCRETE OVERLAY				
118	BCD–1B BRIDGE DECK REHABILITATION WITHOUT CONCRETE OVERLAY				
119	BCD–1C BRIDGE DECK REHABILITATION, DECK JOINT REPAIR (SHEET 1 OF 2)				
120	BCD–1D BRIDGE DECK REHABILITATION, DECK JOINT REPAIR (SHEET 2 OF 2)				
121	BCD–2 STRIP SEAL DECK JOINTS				
122	BCD–3 815MM, 865MM AND 2000MM PARAPETS				
123	BCD–4 BRIDGE MEDIAN BARRIER				
124	BCD–5 SAWCUT GROOVING FOR BRIDGE DECKS				
125	BCD–6 CONCRETE CLASSES AND PAY ITEMS				
126	BCD–7 MISCELLANEOUS BRIDGE ITEMS				
127	BCD–8A BRIDGE CHAIN LINK FENCE (CURVED TOP)				
128	BCD–8B BRIDGE CHAIN LINK FENCE (1900MM HIGH)				
129	BCD–9 STAY–IN–PLACE FORMS				

ABBREVIATIONS

CD = ROADWAY CONSTRUCTION DETAILS
TCD = TRAFFIC CONTROL DETAILS
BCD = BRIDGE CONSTRUCTION DETAILS

BDC01D-4 – ORIGINAL SHEET

INDEX FOR STANDARD ROADWAY CONSTRUCTION DETAILS

INDEX SHEET 1

DESCRIPTION	CD
BEAM GUIDE RAIL	
BEAM GUIDE RAIL	CD–612–1.1
GUIDE RAIL POST INSTALLATION IN ROCK	CD–612–1.2
BEAM GUIDE RAIL, DUAL–FACED	CD–612–2.1
RUB RAIL	CD–612–3
C150X12	CD–612–3.1
RUB RAIL SECTION	CD–612–3.2
BENT PLATE	CD–612–3.3
CARRIAGE BOLT DETAIL	CD–612–3.4
RUB RAIL ANGLE ATTACHMENT	CD–612–3.5
BEAM GUIDE RAIL IN LINE ANCHORAGE	CD–612–4.1
BEAM GUIDE RAIL END ANCHORAGE	CD–612–4.2
ANCHOR PLATE	CD–612–4.3
SLOTTED GUIDE RAIL TERMINALS	CD–612–5.1
EXTRUDER TERMINALS	CD–612–5.2
GRADING TREATMENT AT EXTRUDER TERMINALS	CD–612–5.3
CONTROLLED RELEASE TERMINALS	CD–612–6.1
CONTROLLED RELEASE TERMINALS ANCHORAGE	CD–612–6.2
GENERAL NOTES	CD–612–6.3
BEAM GUIDE RAIL TREATMENT	
MEDIAN GUIDE RAIL WHEN CLEARANCE FROM BACK OF RAIL TO OBSTRUCTION IS 100MM OR GREATER	CD–612–7.1
MEDIAN GUIDE RAIL WHEN CLEARANCE FROM BACK OF RAIL TO OBSTRUCTION IS MORE THAN 50MM BUT LESS THAN 100MM	CD–612–7.2
TELESCOPING GUIDE RAIL END TERMINALS	CD–612–7.3
MEDIAN GUIDE RAIL TREATMENT AT ADJACENT BRIDGES	CD–612–7.4
WHERE CLEARANCE FROM BACK OF RAIL TO OBSTRUCTION IS LESS THAN 2′	CD–612–8.1
WHERE CLEARANCE FROM BACK OF RAIL TO OBSTRUCTION IS MORE THAN 50MM BUT LESS THAN 100MM	CD–612–8.2
WHERE CLEARANCE FROM BACK OF RAIL TO OBSTRUCTION IS 4′ OR GREATER	CD–612–8.3
GUIDE RAIL FOR CUTS (END BURIED IN SLOPE)	CD–612–8.4
ADDITIONAL LENGTH BEAM GUIDE RAIL POSTS	CD–612–8.5
SLOPE TREATMENT AT SLOTTED GUIDE RAIL TERMINALS	CD–612–8.6
WHERE RAIL ELEMENT WITH SPACER IS ATTACHED TO OBSTRUCTION	CD–612–8.7
GENERAL NOTES	CD–612–8.8
BEAM GUIDE RAIL ATTACHMENTS	
GUIDE RAIL ATTACHMENT TO BARRIER	CD–612–9.1
MODIFICATION OF GUIDE RAIL ATTACHMENT TO PARAPET	CD–612–9.2
BRIDGE ATTACHMENT TYPES	CD–612–9.3
GENERAL NOTES	CD–612–9.4
GUIDE RAIL ATTACHMENT TO BALUSTRADE	CD–612–10.1
GUIDE RAIL ATTACHMENT TO SIDEWALK	CD–612–10.2

DESCRIPTION	CD
BEAM GUIDE RAIL (CONTINUED)	
BEAM GUIDE RAIL ATTACHMENTS (CONTINUED)	
GUIDE RAIL ATTACHMENT TO FOOTING	CD–612–11.1
THRIE BEAM	CD–612–12.1
W BEAM TERMINAL CONNECTOR	CD–612–12.2
GUIDE RAIL ATTACHMENT – NEW CONSTRUCTION NEW JERSEY BARRIER SHAPE PARAPET (NO ROADWAY CURBING ON APPROACH)	CD–612–13.1
GUIDE RAIL ATTACHMENT – NEW CONSTRUCTION NEW JERSEY BARRIER SHAPE PARAPET (WITH ROADWAY CURBING ON APPROACH)	CD–612–14.1
GUIDE RAIL ATTACHMENT – NEW CONSTRUCTION (SIDEWALK WITH PARAPET)	CD–612–15.1
GUIDE RAIL ATTACHMENT – NEW CONSTRUCTION (SIDEWALK WITH STEEL RAILING)	CD–612–16.1
BRIDGE APPROACH SLABS	
BRIDGE APPROACH SLABS AND TRANSITION SLABS ADJOINING HMA CONCRETE PAVEMENT	CD–405–6.1
BRIDGE APPROACH SLABS AND TRANSITION SLABS ADJOINING CONCRETE PAVEMENT	CD–405–7.1
CONCRETE SURFACE COURSE	
CONCRETE SURFACE COURSE, REINFORCEMENT, __MM THICK	CD–405–1.1
CULVERTS	
CONCRETE CULVERTS	CD–610–2.1
CONSTRUCTION JOINT OF CULVERT	CD–610–2.2
CURBS	
GENERAL NOTES APPLYING TO ALL TYPES OF DOWELLED CURBS	CD–605–1.1
225 BY __MM CONCRETE / WHITE CONCRETE VERTICAL CURB, DOWELLED	CD–605–1.2
300MM BY 75MM CONCRETE / WHITE CONCRETE SLOPING CURB, DOWELLED	CD–605–1.3
CONCRETE / WHITE CONCRETE VERTICAL CURB MONOLITHIC WITH CONCRETE BASE COURSE	CD–605–1.4
300MM BY 350MM CONCRETE / WHITE CONCRETE SLOPING CURB	CD–605–1.5
CONCRETE / WHITE CONCRETE VERTICAL CURB	CD–605–1.6
CONCRETE / WHITE CONCRETE VERTICAL CURB MONOLITHIC WITH CONCRETE PAVEMENT	CD–605–1.7
NEW OR RESET GRANITE CURB	CD–605–1.8
LIP CURB	CD–605–1.9
375MM BY VARIABLE HT. CONCRETE / WHITE CONCRETE BARRIER CURB, DOWELLED 375MM BY 1040MM CONCRETE / WHITE CONCRETE BARRIER CURB	CD–605–2.1
CURB TREATMENT AT BERM SECTION AND ALL CURB ENDS	CD–605–2.2

DESCRIPTION	CD
CURBS (CONTINUED)	
CURB TRANSITION	CD–605–2.3
METHOD OF DEPRESSING CURB AT DRIVEWAYS	CD–605–2.4
600 BY ___MM CONCRETE / WHITE CONCRETE BARRIER CURB, DOWELLED	CD–605–3.1
GENERAL NOTES	CD–605–3.2
OPENINGS TO BE CONSTRUCTED IN BARRIER CURB	CD–605–3.3
600 BY 1040MM CONCRETE / WHITE CONCRETE BARRIER CURB	CD–605–3.4
BARRIER CURB AT LIGHTING POLE BASE INSTALLATION	CD–605–3.5
DELINEATORS	CD–620–1.1
DRIVEWAYS	
TYPE A	CD–607–2.1
TYPE B	CD–607–2.2
GENERAL NOTES	CD–607–2.3
TYPE C	CD–607–2.4
TYPE D	CD–607–2.5
TYPE E	CD–607–2.6
TYPE F	CD–607–2.7
TYPICAL DRIVEWAY TREATMENT	CD–607–2.8
EMBANKMENT	
BENCHING DETAIL	CD–203–1.1
LIMITS AND METHODS OF PLACING EMBANKMENT AND POROUS BACKFILL AND LIMITS OF ROADWAY EXCAVATION ADJACENT TO BRIDGE ABUTMENTS	CD–203–1.2
FENCES	
CHAIN–LINK FENCE, ___M HIGH	CD–614–1.1
DRIVE ANCHOR SHOE ASSEMBLY	CD–614–1.2
CHAIN–LINK FENCE ASSEMBLIES	CD–614–1.3
NOTES – CHAIN–LINK FENCE	CD–614–1.4
GATES, CHAIN–LINK FENCE, ___ M WIDE	CD–614–1.5
SNOW FENCE	CD–614–2.1
CHAIN–LINK FARM–TYPE FENCE	CD–614–2.2
SNOW FENCE, PLASTIC	CD–614–2.3
HEADWALLS	
CONCRETE HEADWALLS	CD–610–1.1
CONCRETE HEADWALLS AND APRONS	CD–610–1.2

INDEX FOR STANDARD ROADWAY CONSTRUCTION DETAILS

INDEX SHEET 2

DESCRIPTION	CD
INLETS AND MANHOLES	
CONNECTION OF PIPE AND INLET FOR PRECAST INLET	CD–603–1.1
RISER JOINT DETAIL FOR PRECAST INLETS	CD–603–1.2
LADDER RUNG DETAIL	CD–603–1.3
DETAIL OF INVERT FOR INLET WITHOUT CONTINUOUS PIPE	CD–603–1.4
COPOLYMER POLYPROPYLENE PLASTIC LADDER RUNG	CD–603–1.5
GENERAL NOTES	CD–603–1.6
NEW MANHOLE CASTINGS, SQUARE FRAME, CIRCULAR COVER	CD–603–1.7
BICYCLE SAFE GRATE (CAST IRON)	CD–603–1.8
FRAME–BACK–CURB PIECE FOR INLET TYPE B AND TYPE C	CD–603–2.1
INLETS, TYPE C WITH C.I. CURB PIECE–BACK–FRAME AND GRATE	CD–603–2.2
METHOD OF SETTING CASTING FOR B TYPE INLETS WHERE CURB PIECE HEIGHT IS 50MM GREATER THAN CURB FACE	CD–603–2.3
FRAME FOR INLETS, TYPE A	CD–603–2.4
ALTERNATE BACK PLATE	CD–603–2.5
INLETS, TYPE B WITH C.I. CURB PIECE–BACK–FRAME AND GRATE	CD–603–2.6
INLETS, TYPE B MODIFIED	CD–603–3.1
INLETS, TYPE B1 MODIFIED AND TYPE B2 MODIFIED	CD–603–3.2
METHOD OF DEPRESSING INLET AT SHOULDERS	CD–603–3.3
FRAME TO BE USED FOR INLETS, TYPE B MODIFIED	CD–603–3.4
INLETS, TYPE B1 AND TYPE B2	CD–603–3.5
INLETS, TYPE E1 AND TYPE E2	CD–603–4.1
INLETS, TYPE E	CD–603–4.2
FRAMES FOR INLETS, TYPE E	CD–603–4.3
INLETS, TYPE ES	CD–603–4.4
INLET CASTINGS, TYPE ES	CD–603–4.5
INLETS TYPE D1	CD–603–5.1
INLETS TYPE D2	CD–603–5.2
CAST IRON CURB PIECE FOR INLETS, TYPE D1 AND D2	CD–603–5.3
CAST IRON EXTENSION FRAMES FOR EXISTING INLETS	CD–603–6.1
CAST IRON EXTENSION RINGS FOR EXISTING MANHOLES	CD–603–7.1
STANDARD MANHOLE FRAME AND COVER	CD–603–8.1
MANHOLES, MANHOLES 1.5M DIAMETER, MANHOLES 1.8M DIAMETER	CD–603–8.2
GENERAL NOTES	CD–603–8.3
MANHOLES PRECAST CONCRETE MANHOLES 1.5M DIAMETER, MANHOLES 1.8M DIAMETER PRECAST CONCRETE	CD–603–9.1
1.2M PRECAST REINFORCED CONCRETE MANHOLE FLAT TOP	CD–603–9.2
PRECAST MANHOLE RISER JOINT	CD–603–9.3

DESCRIPTION	CD
ISLANDS	
CONCRETE/WHITE CONCRETE ISLAND ON EXISTING PAVEMENT	CD–608–1.1
LONGITUDINAL & TRANSVERSE JOINT TREATMENT FOR CONCRETE ISLAND	CD–608–1.2
HMA ISLAND, 250MM THICK	CD–608–1.3
CONCRETE / WHITE CONCRETE ISLAND, 100MM THICK	CD–608–1.4
JOINTS	
CONCRETE JOINT REMOVAL, MILLING AND RUMBLE STRIPS	CD–202–1
JOINT REMOVAL	CD–202–1.1
MILLING TRANSITIONS	CD–202–1.2
END TREATMENT FOR MILLING OPERATIONS	CD–202–1.3
CONTRACTION JOINT ASSEMBLY	CD–306–1.1
TRANSVERSE CONTRACTION JOINT	CD–306–1.2
CONCRETE SURFACE COURSE JOINT DETAILS	CD–405–2
METAL CHANNEL CAP FOR JOINT FILLER	CD–405–2.1
CONCRETE HEADER	CD–405–2.2
LONGITUDINAL JOINT	CD–405–2.3
PROCEDURE TO BE FOLLOWED IN THE EDGING AND FINISHING OF ALL TRANSVERSE JOINTS	CD–405–2.4
METHOD OF CONSTRUCTION LONGITUDINAL JOINT WHERE NO KEYWAY EXISTS	CD–405–2.5
CONCRETE SURFACE COURSE JOINT DETAILS	CD–405–3
DETAILS OF JOINT BETWEEN EXISTING CONCRETE TO REMAIN AND PROPOSED CONCRETE	CD–405–3.1
LONGITUDINAL JOINT TIE FOR NARROW WIDTH WIDENING	CD–405–3.2
DETAIL OF CONTRACTION JOINT FOR NON–REINFORCED CONCRETE SURFACE COURSE	CD–405–3.3
TIE BOLTS AND TIE BARS	CD–405–4
TIE BOLT ASSEMBLY	CD–405–4.1
LOCATION OF TIE BOLTS OR TIE BARS IN CONCRETE SURFACE COURSE	CD–405–4.2
TRANSVERSE EXPANSION JOINT TYPE A	CD–405–5
TYPICAL CROSS SECTION, PLAN, ELEVATION	CD–405–5.1
DOWEL SPECIFICATIONS	CD–405–5.2
DETAILS OF JOINT FILLER	CD–405–5.3
ALTERNATE JOINT DEVICES	CD–405–5.4
DETAILS OF SHEET METAL SLEEVES	CD–405–5.5
LANDSCAPING	
TOPSOIL STABILIZATION	CD–809–1.1
PLANTING	CD–813–1.1
NONVEGETATIVE SURFACE DETAILS	CD–814–1.1

DESCRIPTION	CD
MONUMENTS	
MONUMENTS	CD–611–1.1
MONUMENT BOXES FOR NEW MONUMENTS	CD–611–1.2
NOISE CONTROL	
TEMPORARY NOISE BARRIER	CD–107–1.1
PIPES	
PIPE END SECTIONS	CD–602–1
END SECTIONS FOR METAL PIPE	CD–602–1.1
END SECTIONS FOR CONCRETE PIPE	CD–602–1.2
CONCRETE COLLAR	CD–602–1.3
STORMWATER OUTFALL PROTECTION	CD–602–1.4
CROSS DRAIN TRENCH CONSTRUCTION	CD–602–2
CONCRETE SURFACE COURSE REPLACEMENT AT CROSS DRAIN TRENCH	CD–602–2.1
HMA REPLACEMENT WHERE CONCRETE COURSE IS REMOVED AT CROSS DRAIN TRENCH	CD–602–2.2
HMA REPLACEMENT WHERE EXISTING OVERLAY AND CONCRETE COURSE IS REMOVED AT CROSS DRAIN TRENCH WITH PROPOSED RESURFACING	CD–602–2.3
HMA REPLACEMENT WHERE EXISTING CONCRETE COURSE IS REMOVED AT CROSS DRAIN TRENCH WITH PROPOSED RESURFACING	CD–602–2.4
TRANSVERSE JOINT TIE IN CONCRETE SURFACE COURSE FOR CONDUIT OR CROSS DRAIN TRENCHES	CD–602–2.5
MINIMUM DEPTH OF ADDITIONAL EXCAVATION OR PIPE BEDDING	CD–602–2.6
PLOWABLE PAVEMENT REFLECTORS	
TEMPORARY PAVEMENT MARKERS	CD–617–2.6
TYPICAL DECELERATION LANE TREATMENT	CD–618–1.1
LEGEND	CD–618–1.2
TYPICAL ACCELERATION LANE TREATMENT	CD–618–1.3
TYPICAL PAVED MEDIAN TREATMENT	CD–618–1.4
TYPICAL DIVISIONAL ISLAND TREATMENT	CD–618–2.1
NARROW BRIDGE OR CULVERT TREATMENT	CD–618–2.2
LEGEND	CD–618–2.3
TYPICAL TWO LANE SECTION	CD–618–2.4
TYPICAL LEFT TURN LANE SECTION	CD–618–2.5
TYPICAL MULTI–LANE DIVIDED SECTION	CD–618–3.1
TYPICAL MULTI–LANE UNDIVIDED SECTION	CD–618–3.2
METHOD FOR DETERMINING REFLECTOR SPACING ON HORIZONTAL CURVES	CD–618–3.3
LEGEND	CD–618–3.4
RUMBLE STRIPS	CD–202–1.4

BDC01D–4 – ORIGINAL SHEET

INDEX FOR STANDARD ROADWAY CONSTRUCTION DETAILS

INDEX SHEET 3

DESCRIPTION	CD
SIDEWALK	
CONCRETE SIDEWALK, 100MM THICK	CD–607–1.1
HMA SIDEWALK, 140MM THICK	CD–607–1.2
CURB RAMPS	CD–607–1.3
SIGNS	
CONSTRUCTION SIGNS	CD–617–6.1
	CD–617–7.1
INTERSTATE CONSTRUCTION IDENTIFICATION SIGN	CD–617–8.1
CONSTRUCTION IDENTIFICATION SIGNS	CD–617–9.1
SIGNS	CD–619–1.1
	CD–619–2.1
	CD–619–3.1
SIGN SUPPORTS	
STEEL U–POST SIGN SUPPORTS	CD–619–4.1
	CD–619–5.1
	CD–619–6.1
BREAKAWAY SIGN SUPPORTS FOR GROUND MOUNTED SIGNS	CD–619–7.1
	CD–619–8.1
	CD–619–9.1
	CD–619–10.1
	CD–619–11.1
	CD–619–12.1
NON–BREAKAWAY SIGN SUPPORTS FOR GROUND MOUNTED SIGNS	CD–619–13.1
	CD–619–14.1
	CD–619–15.1
SLOPE AND CHANNEL PROTECTION	
RIPRAP STONE CHANNEL / SLOPE TREATMENT	CD–616–1.1
SLOPE TREATMENT AT LOW POINTS OF UMBRELLA SECTIONS	CD–616–1.2
SLOPE GUTTERS	
CONCRETE SLOPE GUTTERS, 150MM THICK	CD–604–1.1
SOIL EROSION AND SEDIMENT CONTROL	
SILT FENCE	CD–212–1.1
ATTACHING TWO SILT FENCES	CD–212–1.2
HEAVY DUTY SILT FENCE	CD–212–1.3
TEMPORARY SLOPE DRAIN	CD–212–1.4
HAYBALE CHECK DAM WITH TEMPORARY STONE OUTLET	CD–212–1.5
INLET SEDIMENT TRAPS	CD–212–2.1

DESCRIPTION	CD
SOIL EROSION AND SEDIMENT CONTROL (CONTINUED)	
TEMPORARY STONE CHECK DAM	CD–212–2.2
TEMPORARY STONE OUTLET SEDIMENT TRAPS, ___ BY ___M	CD–212–2.3
INLET FILTERS	CD–212–2.4
INLET PROTECTION HAYBALE BARRIER	CD–212–2.5
ROADWAY GRADING	CD–212–3.1
TEMPORARY RUNOFF DIVERSION	CD–212–3.2
STREAM DIVERSION	CD–212–3.3
FLOATING TURBIDITY BARRIER	CD–212–3.4
TRAFFIC CONTROL	
DRUMS	CD–617–1.1
TRAFFIC CONES	CD–617–1.2
BREAKAWAY BARRICADES	CD–617–1.3
ILLUMINATED FLASHING ARROWS, ___ BY ___MM	CD–617–2.1
DELINEATOR GUIDE POSTS	CD–617–2.2
VERTICAL PANELS	CD–617–2.3
STOP/SLOW PADDLE	CD–617–2.4
TEMPORARY SIDEWALK	CD–617–2.5
PRECAST CONCRETE CURB, CONSTRUCTION BARRIER, TYPE 1	CD–617–3.1
ANCHORAGE FOR TYPE 4 BARRIER USED AS TYPE 1	CD–617–3.2
PRECAST CONCRETE CURB, CONSTRUCTION BARRIER, TYPE 4 (ALTERNATE A)	CD–617–4.1
PRECAST CONCRETE CURB, CONSTRUCTION BARRIER, TYPE 4 (ALTERNATE B)	CD–617–5.1
UNDERDRAINS	
UNDERDRAIN TYPE F WITH POROUS PIPE	CD–601–1.1
UNDERDRAIN TYPE F WITH PERFORATED PIPE	
SUBBASE OUTLET DRAIN WITH 150MM CORRUGATED UNDERDRAIN PIPE	CD–601–1.2
COMBINED STORM DRAIN AND OUTLET TRENCH IN ROCK CUTS	CD–601–1.3

DESCRIPTION	CD

BDCOID–4 – ORIGINAL SHEET

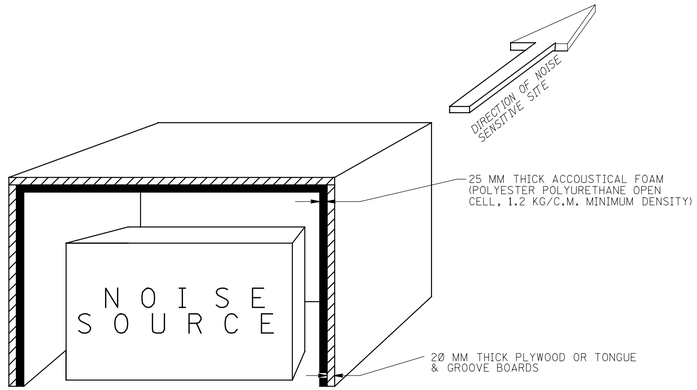

TEMPORARY NOISE BARRIER

CD-107-1.1

NOISE CONTROL

N.T.S.

NOTE: ALL DIMENSIONS SHOWN ON THIS SHEET ARE IN MILLIMETERS UNLESS OTHERWISE NOTED.

CD-107-1

NEW JERSEY DEPARTMENT OF TRANSPORTATION

CONSTRUCTION DETAILS

BDC01D-4 - ORIGINAL SHEET

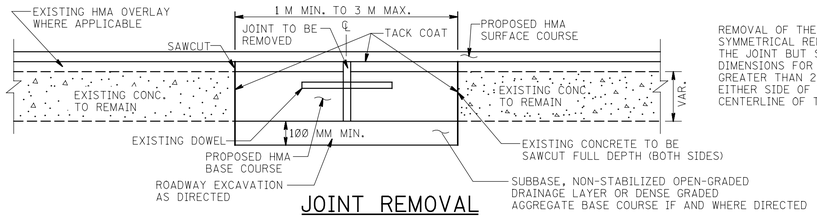

REMOVAL OF THE JOINT SHALL NOT BE LIMITED TO A SYMMETRICAL REMOVAL ABOUT THE CENTERLINE OF THE JOINT BUT SHALL BE AS DIRECTED. THE LIMITING DIMENSIONS FOR ASYMMETRIC REMOVAL SHALL BE NOT GREATER THAN 2500 MM NOR LESS THAN 500 MM ON EITHER SIDE OF THE JOINT WHEN MEASURED FROM THE CENTERLINE OF THE JOINT.

JOINT REMOVAL

CD-202-1.1

NOTE A:

BITUMINOUS CONCRETE PATCH MILLING TRANSITION TO BE USED WHEN LEADING EDGE DEVELOPED BY MILLING OPERATION IS EQUAL TO OR GREATER THAN 25 MM. NONE REQUIRED FOR EDGE LESS THAN 25 MM.

NOTE B:

BITUMINOUS CONCRETE PATCH MILLING TRANSITION TO BE USED WHEN TRAILING EDGE DEVELOPED BY MILLING OPERATION IS EQUAL TO OR GREATER THAN 40 MM. NONE REQUIRED FOR EDGE LESS THAN 40 MM.

MILLING TRANSITIONS

CD-202-1.2

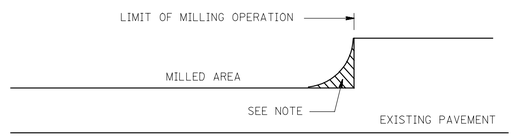

NOTE:

AT THE LIMITS OF THE MILLING OPERATION THE BITUMINOUS MATERIAL LEFT BY THE DRUM RADIUS SHALL BE REMOVED. SAWING OR TRANSVERSE MILLING SHALL BE USED TO INSURE THAT THE FACE IS CLEAN AND VERTICAL. THIS END TREATMENT IS NOT APPLICABLE TO TEMPORARY LIMITS OF MILLING (i.e. END OF WORKDAY). IT IS APPLICABLE TO ALL AREAS WHERE THE COMPLETED MILLING OPERATION MATCHES ANY EXISTING PAVEMENT INCLUDING BRIDGES.

END TREATMENT FOR MILLING OPERATIONS

CD-202-1.3

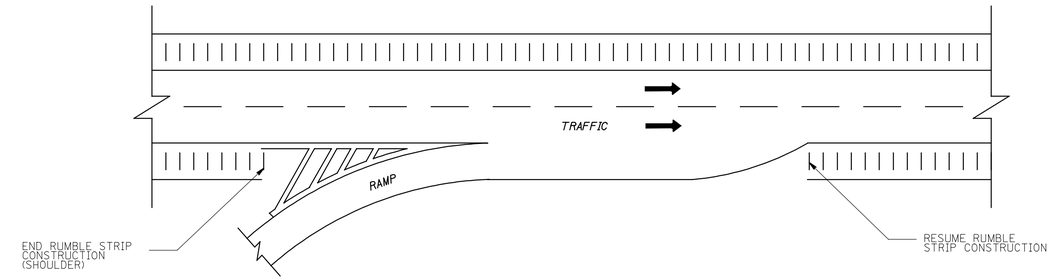

TYPICAL ACCELERATION LANE (RUMBLE STRIP CONSTRUCTION)

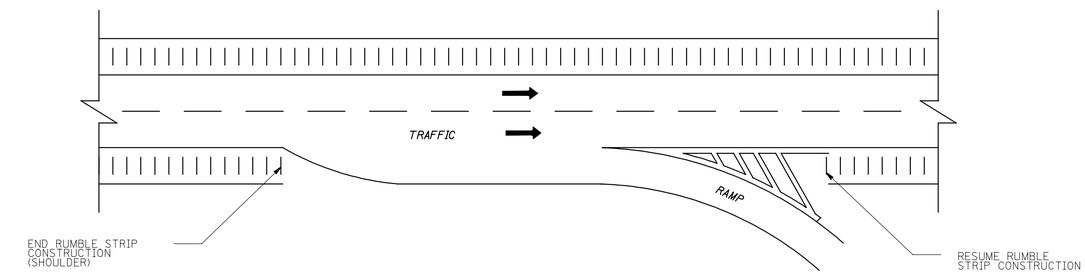

TYPICAL DECELERATION LANE (RUMBLE STRIP CONSTRUCTION)

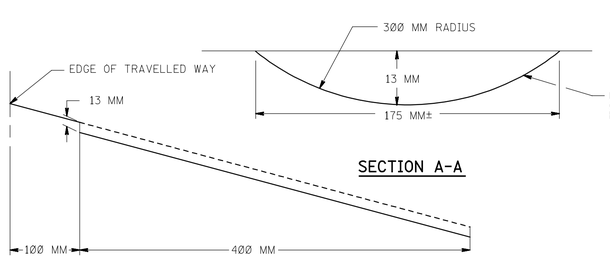

SECTION A-A

SECTION B-B

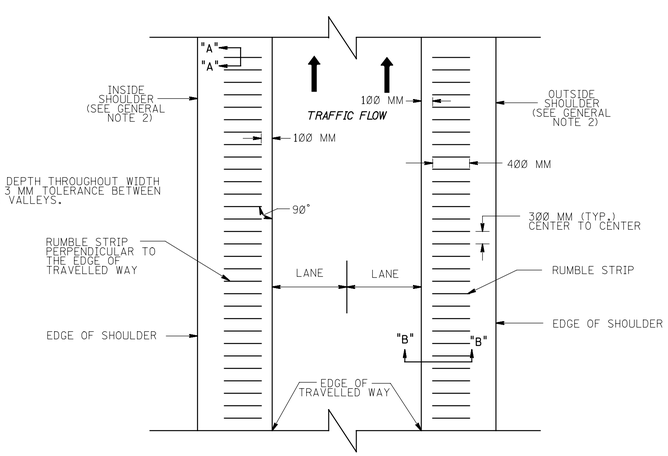

GENERAL NOTES:

1. THE MINIMUM LENGTH OF RUMBLE STRIPS MEASURED LONGITUDINALLY ALONG THE SHOULDER SHALL BE 30 METERS.
2. RUMBLE STRIPS SHALL BE CONSTRUCTED WITHIN 1.5 METERS OR WIDER INSIDE SHOULDER AND 2.4 METERS OR WIDER OUTSIDE SHOULDER.
3. RUMBLE STRIPS SHALL NOT BE CONSTRUCTED ACROSS BRIDGE DECKS.
4. RUMBLE STRIPS SHALL NOT BE CONSTRUCTED WITHIN 30 METERS BEFORE AND 30 METERS AFTER THE P.C. OF INTERSECTING ROADWAYS AND DRIVEWAYS.

CONCRETE JOINT REMOVAL, MILLING AND RUMBLE STRIPS

HMA = HOT MIX ASPHALT

N.T.S.

CD-202-1.4

NOTE: ALL DIMENSIONS SHOWN ON THIS SHEET ARE IN MILLIMETERS UNLESS OTHERWISE NOTED.

CD-202-1

NEW JERSEY DEPARTMENT OF TRANSPORTATION

CONSTRUCTION DETAILS

BDC01D-4 - ORIGINAL SHEET

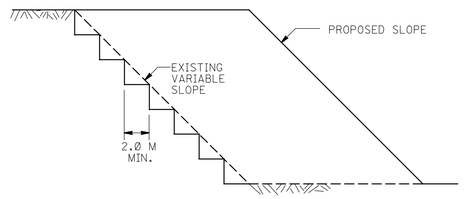

EMBANKMENT ON EXISTING SLOPES

BENCHING DETAIL

CD-203-1.1

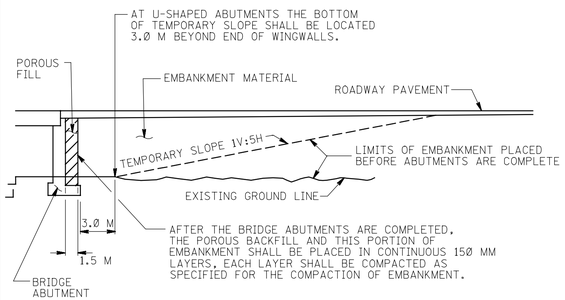

METHOD A

OVERPASS ROADWAY COMPLETELY IN FILL

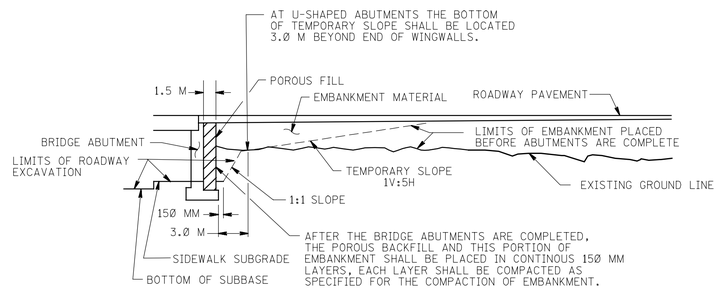

METHOD B

OVERPASS ROADWAY PARTLY IN FILL

NOTE:

LIMITS OF ROADWAY EXCAVATION AND METHODS OF PLACING EMBANKMENT, OTHER THAN POROUS FILL, SHALL BE AS SHOWN IN METHODS A, B, OR C, WHICHEVER IS APPLICABLE.

NOTE:

AT U-SHAPED WINGWALLS THE METHODS OF PLACING AND COMPACTING EMBANKMENT AND POROUS BACKFILL AS SHOWN SHALL APPLY. FOR U-SHAPED WINGWALLS EXCAVATION BELOW THE BOTTOM LIMITS OF ROADWAY EXCAVATION SHOWN ON THESE TYPICAL SECTIONS SHALL BE PAID FOR AS BRIDGE FOUNDATION EXCAVATION. POROUS BACKFILL SHALL BE PLACED BETWEEN THE BACKFACES OF U-SHAPED WINGWALLS AND VERTICAL PLANES AS SHOWN FOR ABUTMENTS.

AT HIGHWAY BRIDGES OVERPASSING RAILROADS AND STREAMS, THE LIMITS AND METHODS OF PLACING AND COMPACTING EMBANKMENTS AS SHOWN SHALL APPLY AND WHERE POROUS BACKFILL IS CALLED FOR THE LIMITS AND METHODS OF PLACING AND COMPACTING IT AS SHOWN SHALL ALSO APPLY.

THE LIMITS SHOWN FOR ROADWAY EXCAVATION DO NOT APPLY TO RAILROAD AND STREAM BRIDGES UNLESS SPECIFICALLY PROVIDED ELSEWHERE IN THE CONTRACT. THESE TYPICIAL SECTIONS AND REQUIREMENTS DO NOT APPLY TO ARCH BRIDGES.

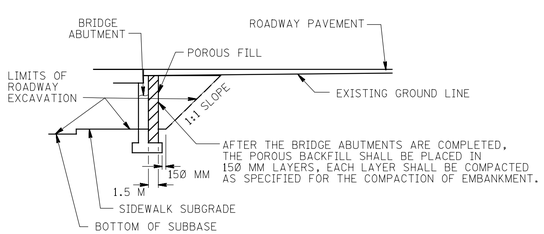

METHOD C

OVERPASS ROADWAY AT EXISTING GRADE

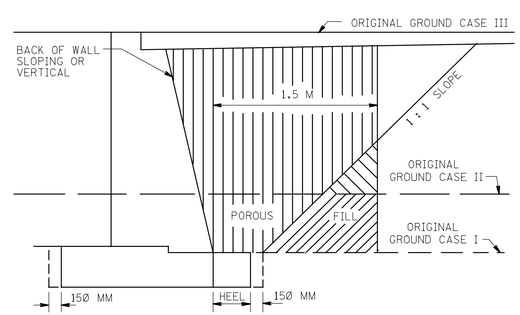

METHOD D

WHEN HEEL IS LESS THAN 1.4 M

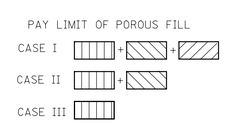

POROUS FILL AND EMBANKMENT

N.T.S.

LIMITS AND METHODS OF PLACING EMBANKMENT AND POROUS BACKFILL AND LIMITS OF ROADWAY EXCAVATION ADJACENT TO BRIDGE ABUTMENTS

CD-203-1.2

NOTE: ALL DIMENSIONS SHOWN ON THIS SHEET ARE IN MILLIMETERS UNLESS OTHERWISE NOTED.

CD-203-1

NEW JERSEY DEPARTMENT OF TRANSPORTATION

CONSTRUCTION DETAILS

RDC010-4 - ORIGINAL SHEET

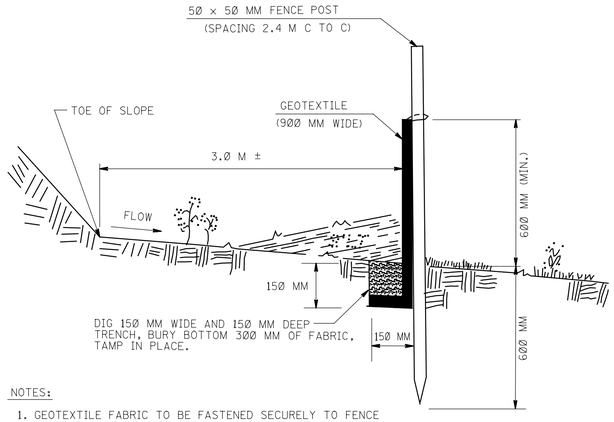

NOTES:

1. GEOTEXTILE FABRIC TO BE FASTENED SECURELY TO FENCE POST BY USE OF WIRE TIES OR HOG RINGS. 3 FASTENERS PER POST.
2. ENDS OF INDIVIDUAL ROLLS OF GEOTEXTILE FABRIC SHALL BE SECURELY FASTENED TO A COMMON POST BY WRAPPING EACH END OF THE FABRIC AROUND THE POST TWICE AND ATTACHING AS SPECIFIED IN NOTE 1 ABOVE. SPLICING OF INDIVIDUAL ROLLS SHALL NOT OCCUR AT LOW POINTS.

SILT FENCE

CD-212-1.1

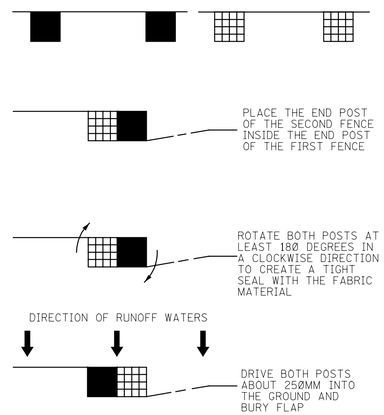

ATTACHING TWO SILT FENCES

CD-212-1.2

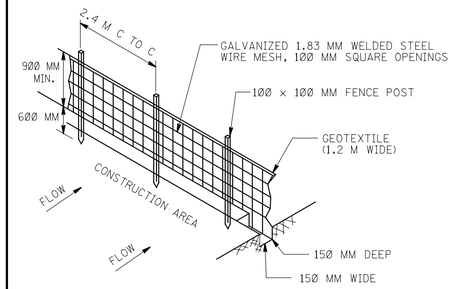

NOTES:

1. GEOTEXTILE FABRIC TO BE FASTENED SECURELY TO FENCE POST BY USE OF WIRE TIES OR HOG RINGS. 3 FASTENERS PER POST.
2. BURY BOTTOM 300MM OF GEOTEXTILE AND TAMP IN PLACE.
3. ENDS OF INDIVIDUAL ROLLS OF GEOTEXTILE FABRIC SHALL BE SECURELY FASTENED TO A COMMON POST BY WRAPPING EACH END OF THE FABRIC AROUND THE POST TWICE AND ATTACHING AS SPECIFIED IN NOTE 1 ABOVE. SPLICING OF INDIVIDUAL ROLLS SHALL NOT OCCUR AT LOW POINTS.

HEAVY DUTY SILT FENCE

CD-212-1.3

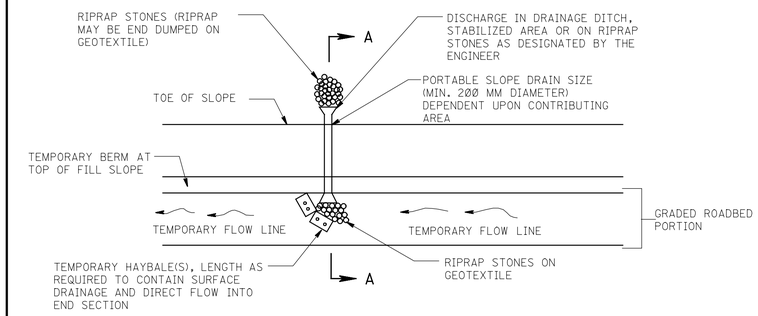

PLAN

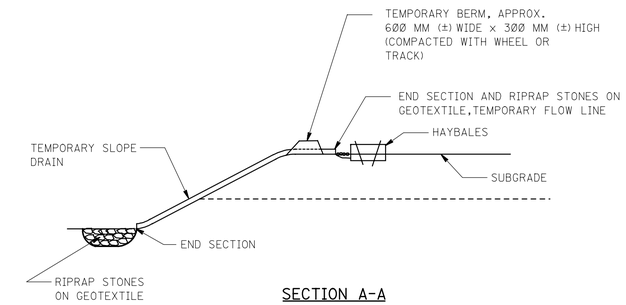

SECTION A-A

(FOR FILL SLOPE)

TEMPORARY SLOPE DRAIN

CD-212-1.4

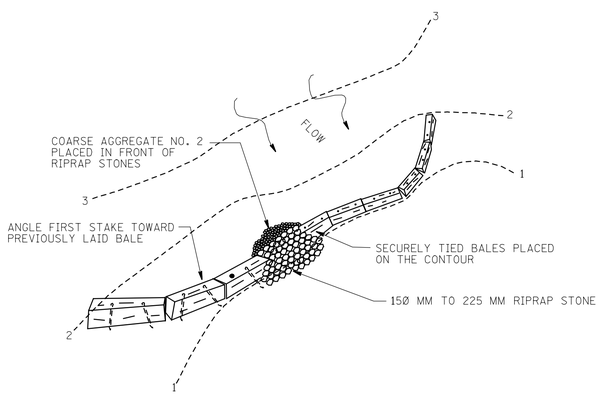

PLACEMENT AND ANCHORING DETAIL

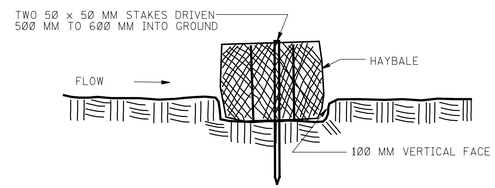

EMBEDDING DETAIL

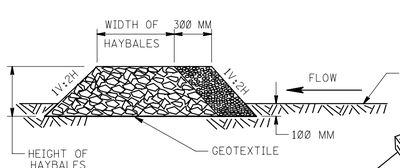

STONE OUTLET

SECTION DETAIL

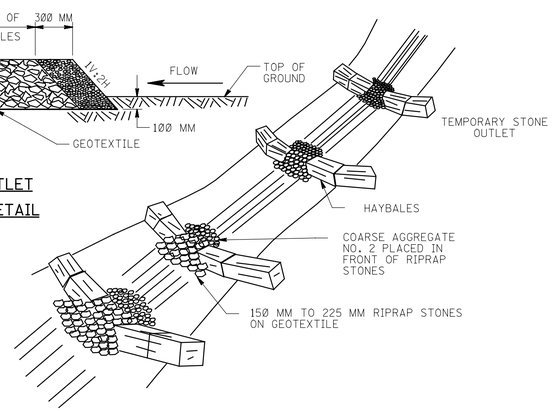

HAYBALE CHECK DAM WITH TEMPORARY STONE OUTLET

CD-212-1.5

NOTE: ALL DIMENSIONS SHOWN ON THIS SHEET ARE IN MILLIMETERS UNLESS OTHERWISE NOTED.

TEMPORARY SOIL EROSION AND SEDIMENT CONTROL MEASURES

N.T.S.

CD-212-1

NEW JERSEY DEPARTMENT OF TRANSPORTATION

CONSTRUCTION DETAILS

RD2010-4 - ORIGINAL SHEET

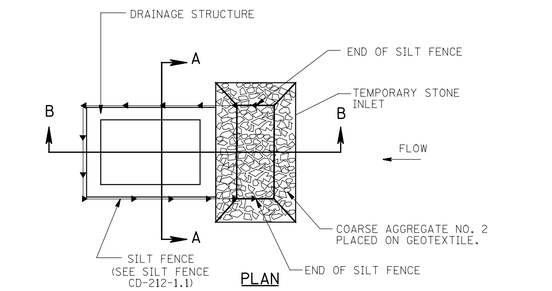

PLAN

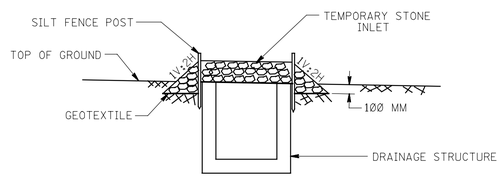

SECTION A-A

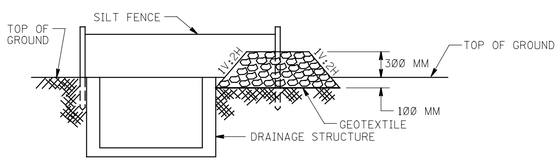

SECTION B-B

INLET SEDIMENT TRAPS

CD-212-2.1

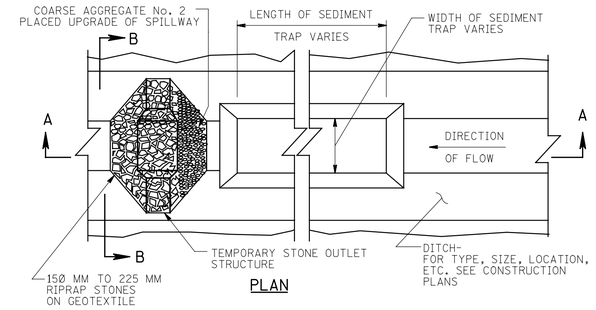

PLAN

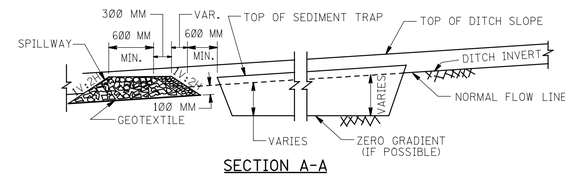

SECTION A-A

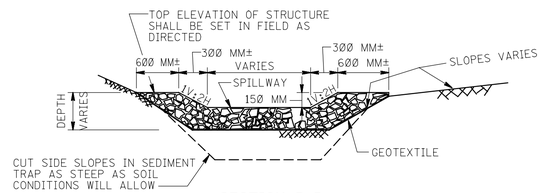

SECTION B-B

TEMPORARY STONE OUTLET SEDIMENT TRAPS, ___ BY ___ M

CD-212-2.3

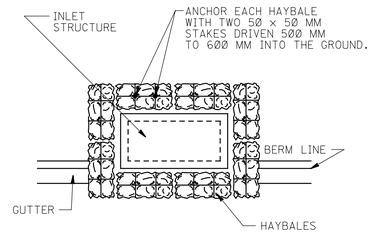

NOTE:
WHERE STAKING IS NOT PRACTICAL, HAYBALES SHALL BE TIED TOGETHER TO PREVENT MOVEMENT.

INLET PROTECTION, HAYBALE BARRIER

CD-212-2.5

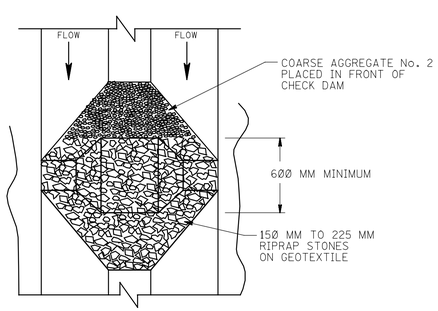

PLAN

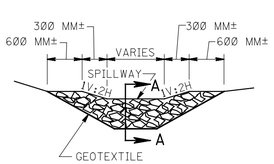

ELEVATION

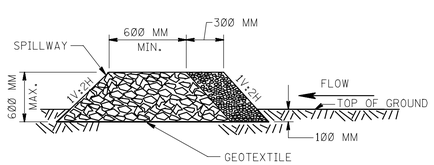

SECTION A-A

TEMPORARY STONE CHECK DAM

CD-212-2.2

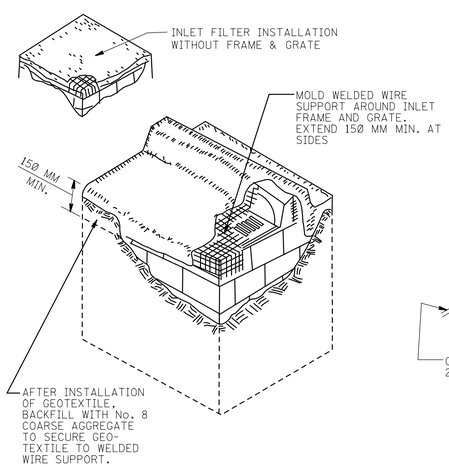

NEW CONSTRUCTION

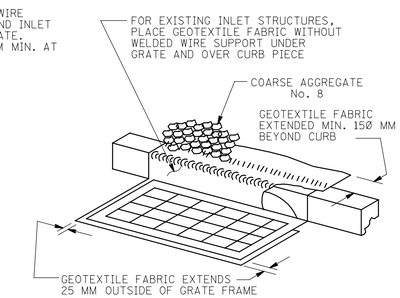

EXISTING INLET

INLET FILTERS

CD-212-2.4

NOTE: ALL DIMENSIONS SHOWN ON THIS SHEET ARE IN MILLIMETERS UNLESS OTHERWISE NOTED.

TEMPORARY SOIL EROSION AND SEDIMENT CONTROL MEASURES

N.T.S.

CD-212-2

NEW JERSEY DEPARTMENT OF TRANSPORTATION

CONSTRUCTION DETAILS

BDC01D-4 - ORIGINAL SHEET

EMBANKMENT

BEFORE BEGINNING ANY EARTHWORK, EXCAVATE AND STABILIZE SIDE DITCHES AND INSTALL PERIMETER CONTROLS, (SILT FENCE, ETC.). SLOPES GREATER THAN 7.5 M IN HEIGHT SHALL BE EXCAVATED AND STABILIZED IN STAGES OF EQUAL INCREMENTS NOT TO EXCEED 4.5 M.

AT THE END OF EACH WORK DAY TEMPORARY BERMS (EARTH) AND SLOPE DRAINS SHALL BE CONSTRUCTED ALONG THE TOP EDGE(S) OF THE EMBANKMENT TO INTERCEPT SURFACE RUNOFF.

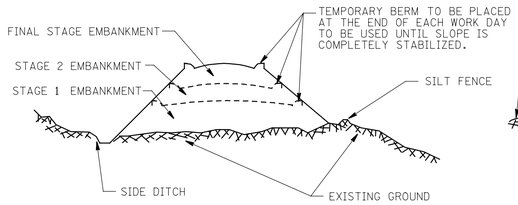

PHASING PLAN-FILL SECTION

CONSTRUCTION SEQUENCE:

1) EXCAVATE AND STABILIZE SIDE DITCHES AND/OR INSTALL PROPOSED CONTROLS AT THE TOES OF SLOPE.
2) PLACE STAGE 1 EMBANKMENT. PLACE TEMPORARY SEEDING AND MULCH, OR TOPSOIL AND PERMANENTLY SEED AND MULCH SLOPE OF THIS STAGE.
3) PLACE STAGE 2 EMBANKMENT. PLACE TEMPORARY SEEDING AND MULCH OR TOPSOIL AND PERMANENTLY SEED AND MULCH SLOPE OF THIS STAGE.
4) PLACE FINAL STAGE EMBANKMENT. PLACE TOPSOIL, PERMANENT SEED AND MULCH ON THE SLOPE THIS STAGE AND ON THE ENTIRE SLOPE IF NOT PREVIOUSLY DONE.

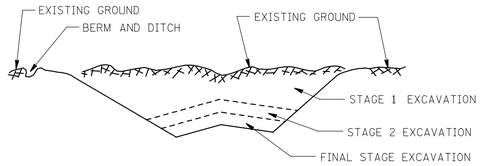

PHASING PLAN-CUT SECTION

CONSTRUCTION SEQUENCE:

1) EXCAVATE AND STABILIZE BERM, SIDE AND OUTLET DITCHES.
2) PERFORM STAGE 1 EXCAVATION. TOPSOIL, PERMANENTLY SEED, AND MULCH SLOPE OF THIS STAGE.
3) PERFORM STAGE 2 EXCAVATION. TOPSOIL, PERMANENTLY SEED, AND MULCH SLOPE OF THIS STAGE.
4) PERFORM FINAL STAGE EXCAVATION. TOPSOIL, PERMANENTLY SEED AND MULCH SLOPE OF THIS STAGE. REPAIR ANY DAMAGE DONE TO PREVIOUS STAGES.

ROADWAY GRADING DETAILS

CD-212-3.1

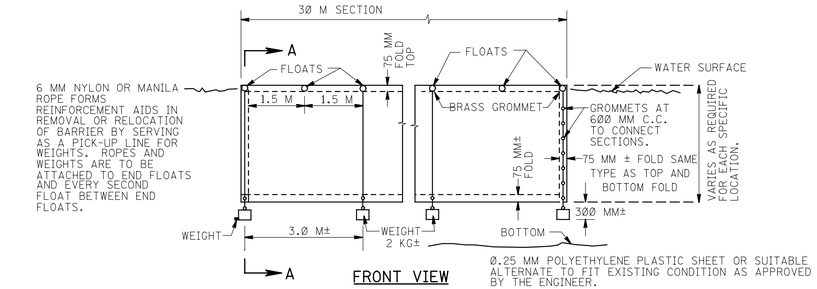

FRONT VIEW

0.25 MM POLYETHYLENE PLASTIC SHEET OR SUITABLE ALTERNATE TO FIT EXISTING CONDITION AS APPROVED BY THE ENGINEER.

SIDE VIEW
FOLDING DETAIL

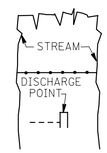

TYPICAL APPLICATION

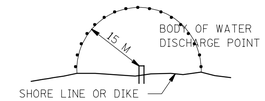

TYPICAL APPLICATION

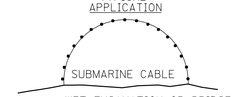

WET EXCAVATION OR BRIDGE STRUCTURE. (WET)

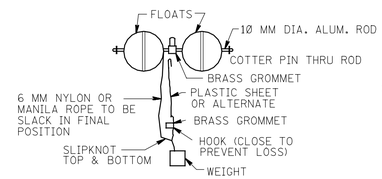

SECTION A-A

NOTE:

SUITABLE ALTERNATE MAY BE FASTENED TO STAKES DRIVEN INTO THE BOTTOM IN LIEU OF FLOATS AND WEIGHTS

GENERAL NOTES:

PLACE SILT BARRIER TO PREVENT DRIFTING OF SILT CAUSED BY DISCHARGE OF STORM SEWERS DURING CONSTRUCTION, DREDGING OR FILLING OPERATIONS.

EXACT PLACEMENT OF SILT BARRIER SHALL BE SO AS TO EFFECTIVELY CONTROL SILT DISPERSION UNDER THE CONDITIONS PRESENT ON A PARTICULAR PROJECT.

THE DETAILS SHOWN ON THIS SHEET ARE SUGGESTED METHODS ONLY ALTERNATE SOLUTION AND USAGE OF MATERIALS MAY BE USED AS APPROVED.

FLOATING TURBIDITY BARRIER

CD-212-3.4

	DITCH A (2 HECTARES OR LESS)	DITCH B (2-4 HECTARES)
DITCH DEPTH (C)	300 MM	300 MM
DITCH WIDTH (D)	1 200 MM	2 000 MM

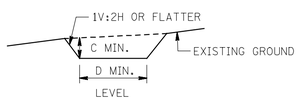

DITCH CROSS SECTION

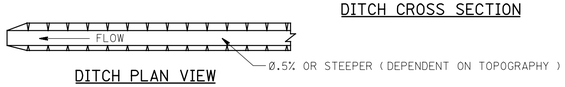

DITCH PLAN VIEW

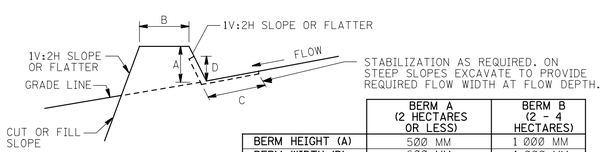

	BERM A (2 HECTARES OR LESS)	BERM B (2 - 4 HECTARES)
BERM HEIGHT (A)	500 MM	1 000 MM
BERM WIDTH (B)	600 MM	1 000 MM
FLOW WIDTH (C)	1200 MM	1800 MM
FLOW HEIGHT (D)	200 MM	400 MM

BERM CROSS SECTION

NOTE:
FIELD LOCATION SHOULD BE ADJUSTED AS NEEDED TO UTILIZE A STABILIZED OUTLET.

STABILIZATION FOR DITCH OR BERM

TYPE OF TREATMENT	GRADE	A - (2 HECTARES OR LESS)	B - (2- 4 HECTARES)
1	0.5-5.0%	SEED USED WITH TOPSOIL STABILIZATION MATTING	SEED USED WITH TOPSOIL STABILIZATION MATTING
2	5.1-8.0%	SEED USED WITH TOPSOIL STABILIZATION MATTING	LINED 150 MM - 225 MM RIPRAP
3	8.1-20%	LINED 150 MM - 225 MM RIPRAP	ENGINEERED DESIGN

TEMPORARY RUNOFF DIVERSION DETAILS

CD-212-3.2

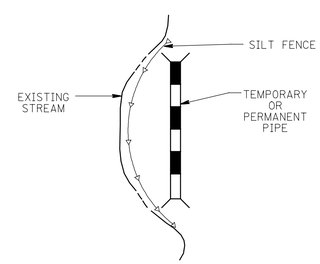

METHOD A
PREFERRED

CONSTRUCTION SEQUENCE:

1. INSTALL SILT FENCE ALONG EXISTING STREAM IN AREA OF PROPOSED PIPE CONSTRUCTION.
2. CONSTRUCT PIPE SYSTEM.
3. DIVERT STREAM FLOW INTO PIPE.
4. CONTINUE WITH CONSTRUCTION STAGING.

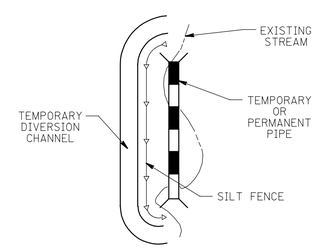

METHOD B

CONSTRUCTION SEQUENCE:

1. INSTALL SILT FENCE ALONG EXISTING STREAM IN AREA OF TEMPORARY DIVERSION CHANNEL.
2. CONSTRUCT TEMPORARY DIVERSION CHANNEL AND LINE WITH GEOTEXTILE AND TEMPORARY RIPRAP.
3. DIVERT STREAM FLOW INTO TEMPORARY CHANNEL.
4. CONTINUE SEQUENCE FROM STEP 2, METHOD A.

STREAM DIVERSION DETAILS

CD-212-3.3

NOTE: ALL DIMENSIONS SHOWN ON THIS SHEET ARE IN MILLIMETERS UNLESS OTHERWISE NOTED.

TEMPORARY SOIL EROSION AND SEDIMENT CONTROL MEASURES

N.T.S.

CD-212-3

NEW JERSEY DEPARTMENT OF TRANSPORTATION

CONSTRUCTION DETAILS

BDC01D-4 - ORIGINAL SHEET

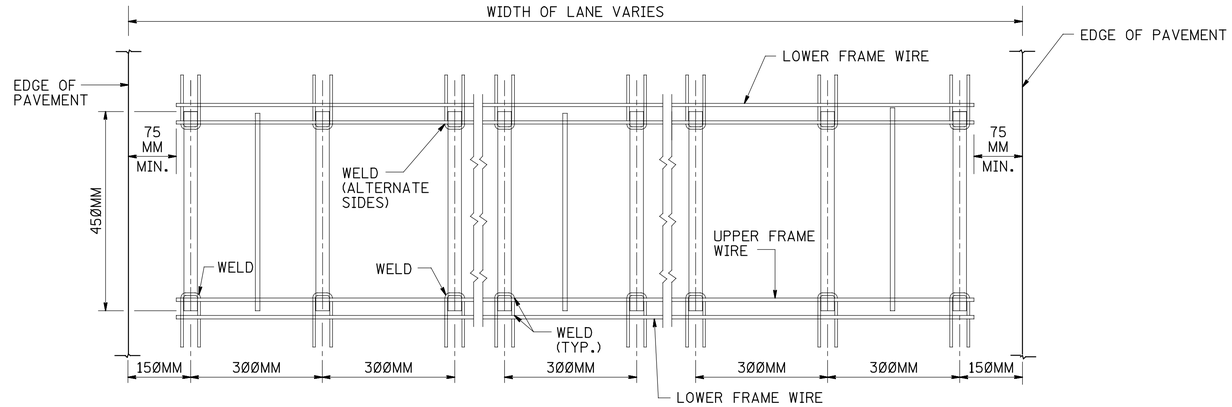

PLAN VIEW

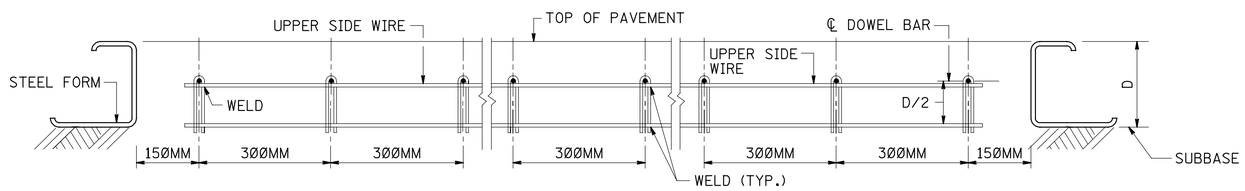

ELEVATION VIEW

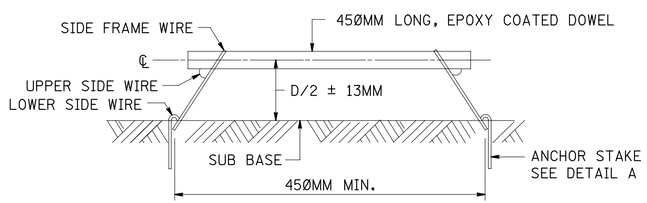

END VIEW

FOR SLIP FORM PAVING, SUPPORT THE UPPER SIDE WIRE BY PLACING THE ANCHOR HOOK OVER THE TOP WIRE

FRAME DETAIL

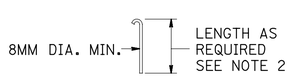

DETAIL A
ANCHOR STAKE

NOTES:

1. PROVIDE A MINIMUM OF EIGHT ANCHOR STAKES (FOUR PER SIDE). ANCHOR STAKES SHALL ENGAGE LOWER SIDE FRAME WIRES. USE ADDITIONAL STAKES AS NECESSARY, TO SECURE ASSEMBLIES, AS DIRECTED BY THE ENGINEER.
2. PROVIDE 300MM MINIMUM ANCHOR STAKES TO SECURE ASSEMBLIES WHEN SUBBASE IS USED AND 450MM MINIMUM ANCHOR STAKES WHEN AN OPEN GRADED DRAINAGE LAYER IS USED.
3. PROVIDE DOWEL BARS PARALLEL TO THE CENTERLINE AND TO THE PAVEMENT SURFACE. TOLERANCE OF THIS PLACEMENT SHALL BE WITHIN 6MM PER DOWEL BAR.
4. PROVIDE FRAME SUPPORT ASSEMBLY WIRES CONFORMING TO THE CURRENT ASTM DESIGNATION A-82 SPECIFICATIONS FOR COLD-DRAWN STEEL WIRE FOR CONCRETE REINFORCEMENT AND OF A MINIMUM ALLOWABLE SIZE AS FOLLOWS:

PAVEMENT DEPTHS	UPPER AND LOWER FRAME WIRES	SIDE FRAME WIRES
225MM OR LESS	7.9MM MIN.	7.9MM MIN.
> 225MM	11.1MM MIN.	11.1MM MIN.

TYPICAL LOAD TRANSFER ASSEMBLY		
LANE WIDTH	OVERALL UNIT LENGTH	NO. OF DOWELS
2.7M	2.6M	9
3.0M	2.9M	10
3.3M	3.2M	11
3.6M	3.5M	12

CONTRACTION JOINT ASSEMBLY

CD-306-1.1

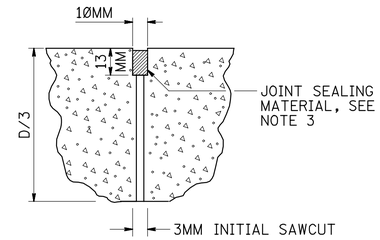

DETAIL A

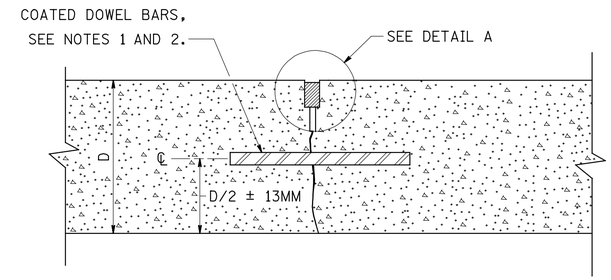

NOTES:

1. USE MINIMUM 32MM x 450MM LONG DOWEL BARS FOR PAVEMENT DEPTHS 225MM OR LESS. MINIMUM 38MM x 450MM LONG DOWEL BARS FOR PAVEMENT DEPTHS GREATER THAN 225MM. APPROVED ALTERNATE DOWEL BARS HAVING EQUIVALENT PROPERTIES TO CONVENTIONAL ROUND DOWEL BARS MAY BE USED.
2. PLACE DOWEL BARS PARALLEL TO THE CENTERLINE AND SURFACE OF THE SLAB. THE VERTICAL OR HORIZONTAL SKEW FROM ONE END OF THE DOWEL BAR TO THE OTHER END SHALL NOT EXCEED 6MM.
3. THE TOP OF THE JOINT SEALING MATERIAL SHALL NOT BE LESS THAN 2MM NOR MORE THAN 5MM BELOW THE SURFACE OF THE PAVEMENT.
4. THE INITIAL SAWCUT IS NOT REQUIRED FOR TRANSVERSE BUTT JOINTS.

TRANSVERSE CONTRACTION JOINT

CD-306-1.2

CONTRACTION JOINTS IN CONCRETE BASE COURSE

N.T.S.

CD-306-1

NEW JERSEY DEPARTMENT OF TRANSPORTATION

CONSTRUCTION DETAILS

BDC01D-4 – ORIGINAL SHEET

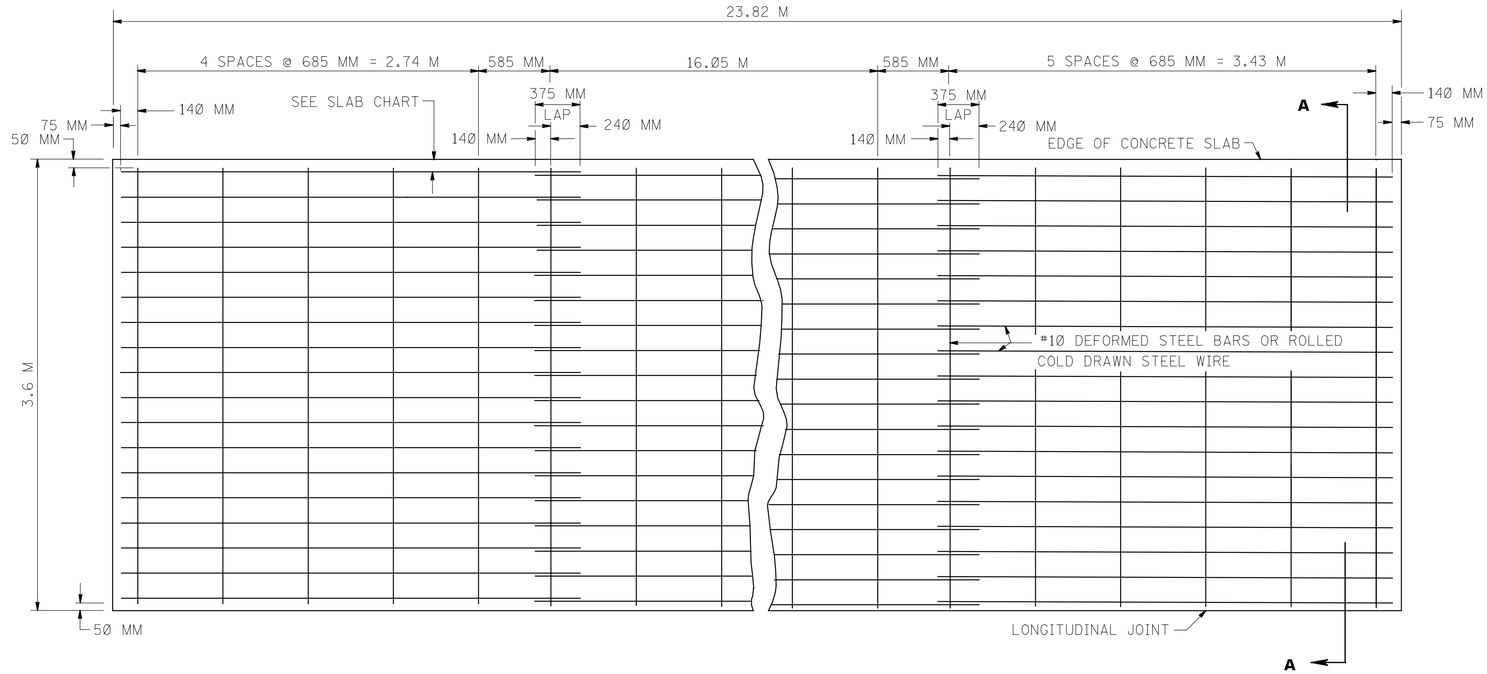

REINFORCEMENT FOR 3.6 M WIDTH SLAB

REINFORCEMENT REQUIREMENTS WHEN USING WELDED STEEL WIRE FABRIC

SLABS LESS THAN 250 MM THICK:

LONGITUDINAL WIRE SHALL BE SIZE NO. W8.6 SPACED 150 MM ON CENTER.

TRANSVERSE WIRE SHALL BE SIZE NO. W4.7 SPACED 300 MM ON CENTER.

EDGE CLEARANCE OF OUTSIDE LONGITUDINAL WIRE SHALL BE 75 MM.

EDGE CLEARENCE OF THE LAST TRANSVERSE WIRE SHALL NOT BE GREATER THAN 275 MM.

END CLEARANCE OF THE LONGITUDINAL WIRE SHALL NOT BE LESS THAN 25 MM NOR MORE THAN 75 MM.

LONGITUDINAL WIRES SHALL BE LAPPED A MINIMUM OF 300 MM.

SLABS 250MM THICK:

LONGITUDINAL WIRE SHALL BE SIZE NO. W10.5 SPACED 150 MM ON CENTER.

TRANSVERSE WIRE SHALL BE SIZE NO. W5.5 SPACED 300 MM ON CENTER.

EDGE CLEARANCE OF OUTSIDE LONGITUDINAL WIRE SHALL BE 75 MM.

EDGE CLEARENCE OF THE LAST TRANSVERSE WIRE SHALL NOT BE GREATER THAN 275 MM.

END CLEARANCE OF THE LONGITUDINAL WIRE SHALL NOT BE LESS THAN 25 MM NOR MORE THAN 75 MM.

LONGITUDINAL WIRES SHALL BE LAPPED A MINIMUM OF 300 MM.

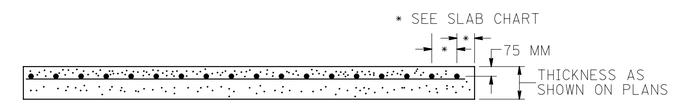

SECTION A–A

NOTES:

1. BAR MATS DIFFERING WITH RESPECT TO THEIR LENGTH, SPACING OF TRANSVERSE BARS AND TYPE OF FABRICATION FROM THE MAT SHOWN IN THESE DRAWINGS MAY BE USED, PROVIDED THAT (a) THE MATS HAVE THE SAME SIZE AND SPACING OF LONGITUDINAL BARS, AND PROVIDE AT LEAST THE SAME NUMBER OF TRANSVERSE BARS PER SLAB, AS CALLED FOR IN THESE DRAWINGS, AND (b) APPROVAL FOR USE HAS BEEN OBTAINED FROM THE ENGINEER.

   * SEE SLAB CHART

2. ALL BAR MATS SHALL BE FABRICATED ALIKE WITH FIVE (5) TRANSVERSE BARS EXCEPT THE LAST MAT IN EACH SLAB WHICH HAS AN ADDITIONAL TRANSVERSE BAR PLACED 215 MM FROM THE TRANSVERSE JOINT.

GENERAL NOTE:

THE LONGITUDINAL LENGTH OF THE SLAB (23.82 M) REFERS TO THE MAXIMUM SLAB DIMENSION WHICH WILL OCCUR AT THE OUTER EDGE OF THE OUTSIDE SLAB ON A CURVE. THE LONGITUDINAL DIMENSION ON THE INNER EDGE OF THIS SLAB AND ADJACENT SLABS WILL VARY IN ORDER TO PROVIDE TRANSVERSE JOINT ALIGNMENT.

SLAB CHART FOR THICKNESS LESS THAN 250 MM														
* WIDTH OF SLAB	0.9 M	1.2 M	1.5 M	1.8 M	2.1 M	2.4 M	2.7 M	3.0 M	3.3 M	3.6 M	3.9 M	4.2 M	4.5 M	4.8 M
NUMBER OF LONGITUDINAL BARS	5	6	8	9	11	13	14	16	17	19	21	22	24	25
SLAB CHART FOR 250 MM THICKNESS														
* WIDTH OF SLAB	0.9 M	1.2 M	1.5 M	1.8 M	2.1 M	2.4 M	2.7 M	3.0 M	3.3 M	3.6 M	3.9 M	4.2 M	4.5 M	4.8 M
NUMBER OF LONGITUDINAL BARS	6	8	10	12	14	16	18	20	22	24	26	28	30	32

NOTE:

THE EDGE CLEARANCE OF OUTSIDE LOGITUDINAL BARS SHALL BE 75 MM IN ALL CASES.

BARS TO BE EVENLY SPACED ACROSS WIDTH OF SLAB WITH A MAXIMUM SPACING OF 190 MM FOR SLABS WITH A THICKNESS OF LESS THAN 250 MM AND 150 MM FOR SLABS WITH A THICKNESS OF 250 MM.

CONCRETE SURFACE COURSE, REINFORCED, ____MM THICK

CD-405-1.1

CONCRETE SURFACE COURSE

N.T.S.

CD-405-1

NEW JERSEY DEPARTMENT OF TRANSPORTATION

CONSTRUCTION DETAILS

BD2010-4 - ORIGINAL SHEET

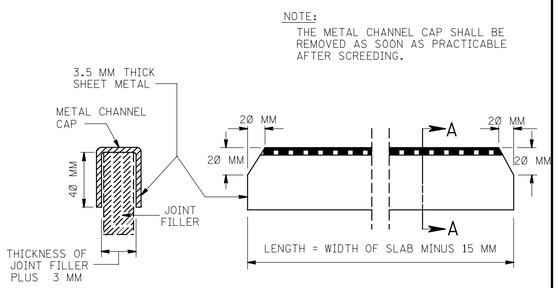

METAL CHANNEL CAP FOR JOINT FILLER

CD-405-2.1

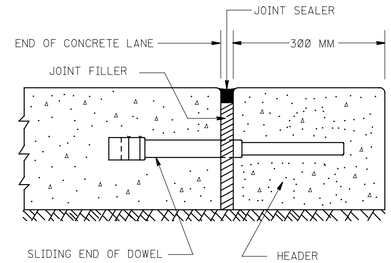

HEADER TO BE CONSTRUCTED AT ENDS OF MAIN TRAFFIC LANES WHERE THE PROPOSED CONCRETE ADJOINS A TEMPORARY TYPE PAVEMENT OTHER THAN CONCRETE AND WHERE IT IS ANTICIPATED THAT THE TEMPORARY PAVEMENT WILL BE REMOVED AND REPLACED WITH CONCRETE.

DETAIL OF CONCRETE HEADER

CD-405-2.2

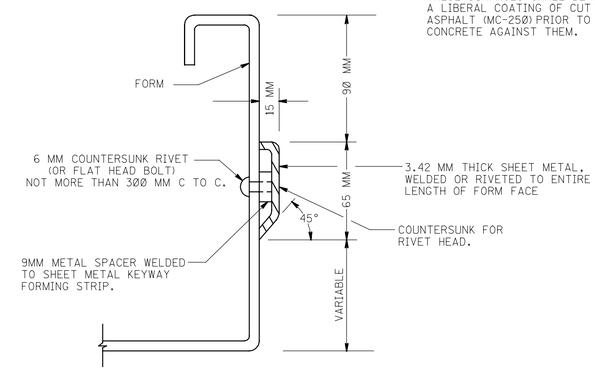

DETAIL OF KEYWAY FORMING STRIP

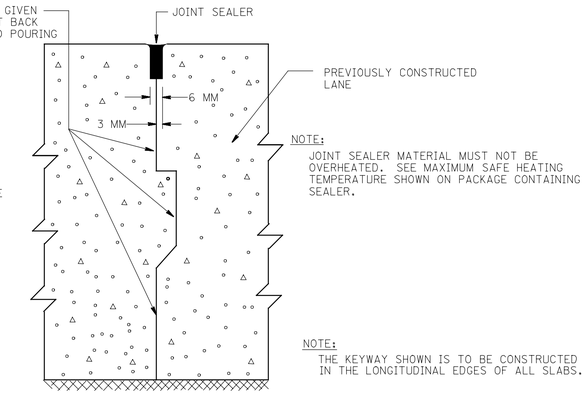

CROSS SECTION OF LONGITUDINAL JOINT
DETAILS OF LONGITUDINAL JOINT

CD-405-2.3

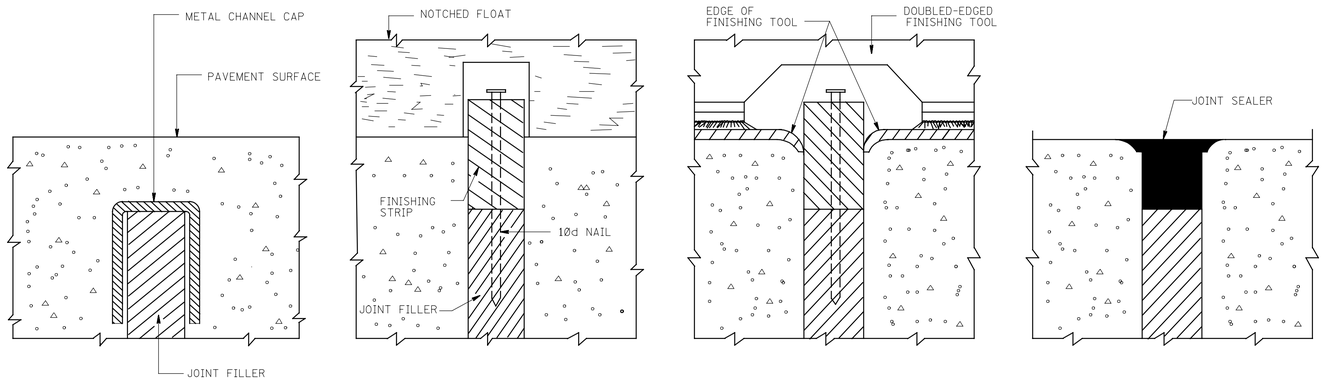

TOP OF JOINT FILLER PROTECTED BY THE METAL CHANNEL CAP DURING THE PLACING OF THE CONCRETE AND OPERATION OF THE FINISHING MACHINES. THE CAP SHALL BE REMOVED AS SOON AS PRACTICABLE AFTER THE FINAL PASSAGE OF THE FINISHING MACHINES.

AFTER THE REMOVAL OF THE CAP, THE FINISHING STRIP IS TO BE CENTERED DIRECTLY OVER THE JOINT FILLER AND NAILED SECURELY THERETO. AFTER THE REPLACEMENT OF THE DISTURBED CONCRETE, THE PAVEMENT SURFACE IS TO BE FINISHED TO THE PROPER GRADE BY MEANS OF A NOTCHED FLOAT.

AFTER THE CONCRETE HAS SET SUFFICIENTLY, AND AFTER SURFACE TEXTURING, THE CONCRETE AT THE JOINT SHALL BE LIGHTLY EDGED AND FINISHED WITH A DOUBLE-EDGE TOOL.
THE FINISHING STRIP IS TO REMAIN IN PLACE UNTIL IMMEDIATELY PRIOR TO SEALING THE JOINT.

COMPLETED JOINT

PROCEDURE TO BE FOLLOWED IN THE EDGING AND FINISHING OF ALL TRANSVERSE JOINTS

CD-405-2.4

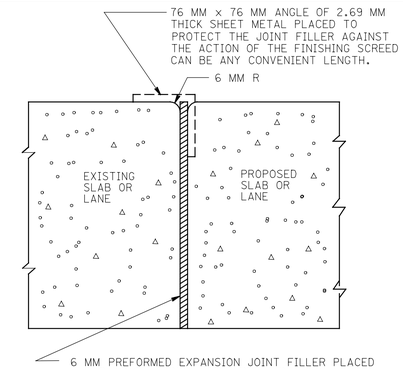

METHOD OF CONSTRUCTION LONGITUDINAL JOINT WHERE NO KEYWAY EXISTS

CD-405-2.5

NOTE: ALL DIMENSIONS SHOWN ON THIS SHEET ARE IN MILLIMETERS UNLESS OTHERWISE NOTED.

CONCRETE SURFACE COURSE JOINT DETAILS

N.T.S.

CD-405-2

NEW JERSEY DEPARTMENT OF TRANSPORTATION

CONSTRUCTION DETAILS

RDC01D-4 - ORIGINAL SHEET

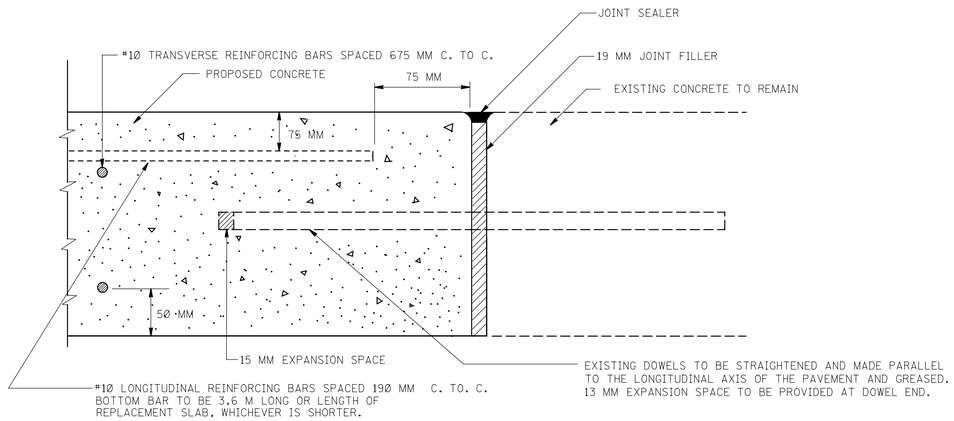

DETAILS OF JOINT BETWEEN EXISTING CONCRETE TO REMAIN AND PROPOSED CONCRETE

CD-405-3.1

NOTE;

THE GROOVE MUST EXTEND THE FULL WIDTH OF THE LANE

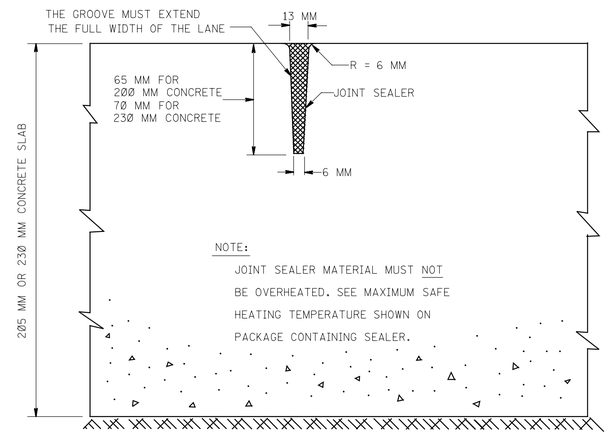

CONTRACTION JOINTS TO BE INSTALLED IN CONCRETE AT INTERVALS OF 4.5 METERS

DETAIL OF CONTRACTION JOINT FOR NON-REINFORCED CONCRETE SURFACE COURSE

CD-405-3.3

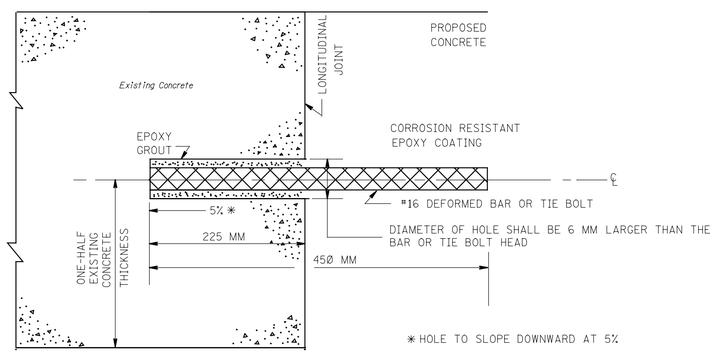

LONGITUDINAL JOINT TIE FOR NARROW WIDTH WIDENING

NOTE;

THE TIES SHALL BE SPACED 900 MM CENTER TO CENTER. TIES SHALL NOT BE PLACED WITHIN 600 MILLIMETERS OF A TRANSVERSE EXPANSION OR CONTRACTION JOINT. WHEN A TIE WILL FALL WITHIN 300 MILLIMETERS OF A CRACK EXTENDING THROUGH THE FULL DEPTH OF THE EXPOSED EDGE OF THE EXISTING CONCRETE IT SHALL BE MOVED LATERALLY OR OMITTED AT THE DIRECTION OF THE ENGINEER.

CD-405-3.2

CONCRETE SURFACE COURSE JOINT DETAILS

N.T.S.

CD-405-3

NEW JERSEY DEPARTMENT OF TRANSPORTATION

CONSTRUCTION DETAILS

NOTE: ALL DIMENSIONS SHOWN ON THIS SHEET ARE IN MILLIMETERS UNLESS OTHERWISE NOTED.

RD2010-4 - ORIGINAL SHEET

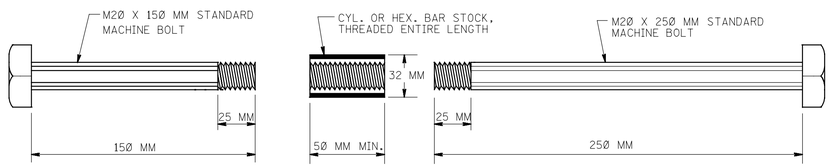

DETAIL OF PARTS

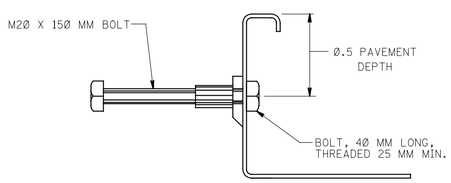

SKETCH SHOWING ATTACHMENT TO FORM

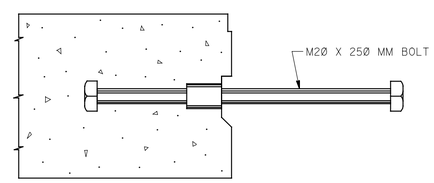

SKETCH SHOWING COMPLETE INSTALLATION

TIE BOLT ASSEMBLY

DETAILS - TIE BOLTS

CD-405-4.1

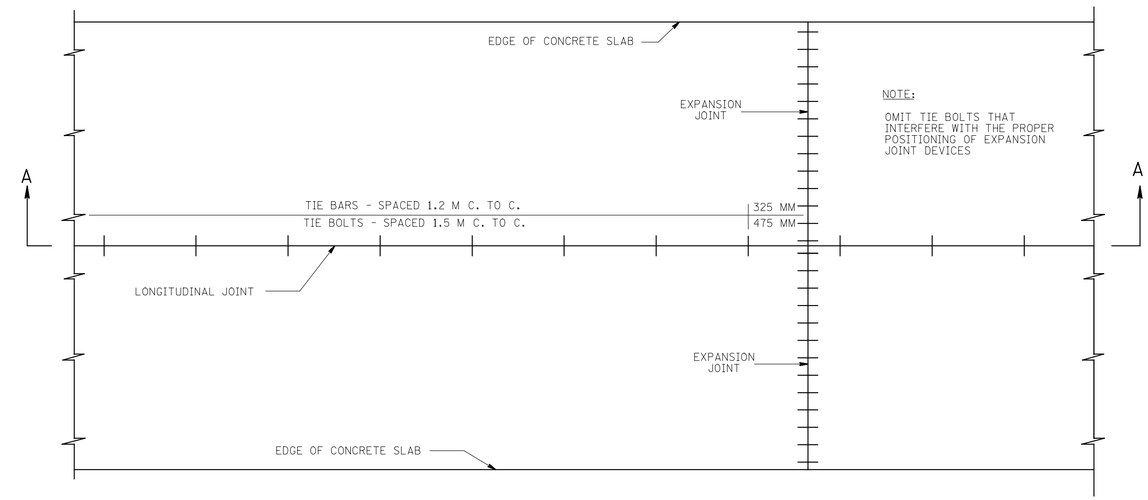

NOTE:

OMIT TIE BOLTS THAT INTERFERE WITH THE PROPER POSITIONING OF EXPANSION JOINT DEVICES

LOCATION OF TIE BOLTS OR TIE BARS IN CONCRETE SURFACE COURSE

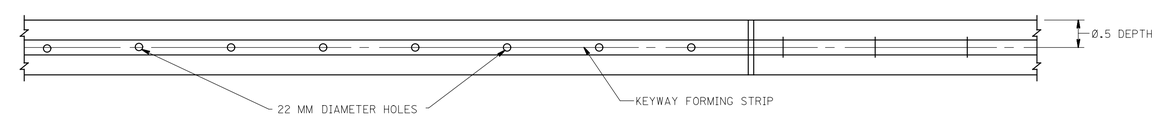

SECTION A-A

NOTES:

IN THE CASE OF FOUR ADJACENT LANES, TIES ARE TO BE OMITTED ALONG THE LONGITUDINAL JOINT BETWEEN THE INNER LANES. UNDER ANY OTHER CONDITIONS, NO MORE THAN THREE ADJACENT LANES ARE TO BE CONNECTED BY TIES.

TIES SHALL BE OMITTED IN TRANSITION PAVEMENT AND BRIDGE APPROACH SLABS.

WHEN TWO ADJACENT LANES OF CONCRETE ARE CONSTRUCTED IN A SINGLE OPERATION, TIE BARS, CONSISTING OF 16M STRAIGHT BARS OF REINFORCING STEEL, 915 MM LONG, SHALL BE INSTALLED BETWEEN THE LANES AND POSITIONED SUCH THAT THEY WILL BE CENTERED ON A LONGITUDINAL JOINT AND AT RIGHT ANGLES THERETO, AND MIDWAY BETWEEN THE TOP AND BOTTOM OF THE CONCRETE COURSE.

CD-405-4.2

NOTE: ALL DIMENSIONS SHOWN ON THIS SHEET ARE IN MILLIMETERS UNLESS OTHERWISE NOTED.

TIE BOLTS AND TIE BARS

N.T.S.

CD-405-4

NEW JERSEY DEPARTMENT OF TRANSPORTATION

CONSTRUCTION DETAILS

RDC01D-4 - ORIGINAL SHEET

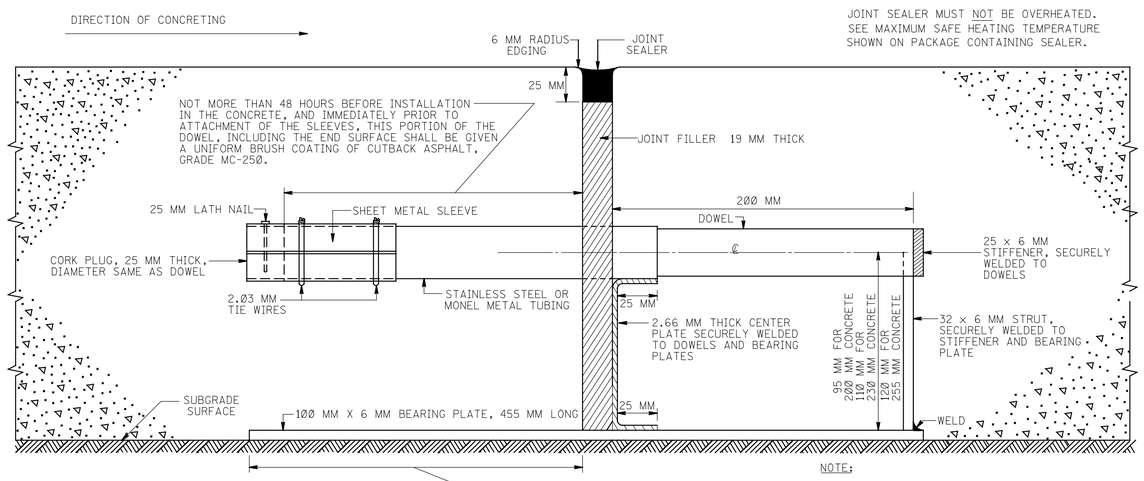

NOTE:

JOINT SEALER MUST NOT BE OVERHEATED. SEE MAXIMUM SAFE HEATING TEMPERATURE SHOWN ON PACKAGE CONTAINING SEALER.

NOTE:

THE TOP SURFACE AND EDGES OF THIS PORTION OF THE BEARING PLATE SHALL BE GIVEN A LIBERAL BRUSH COATING OF HEAVY OIL OR GREASE IMMEDIATELY PRIOR TO CONCRETING

NOTE:

TUBING WELD (MADE WITH STAINLESS STEEL) USE STAINLESS STEEL WELDING ROD AND No. 140 MONEL ROD IF TUBING IS MONEL.

NOTE:

THE HEIGHT OF THE STEEL SPACER EQUALS THE DISTANCE FROM THE BEARING PLATE TO THE ℄ OF THE DOWEL MINUS HALF OF THE DOWEL DIAMETER LESS THE 32 MM ANGLE.

TYPICAL CROSS SECTION

NOTE:

THE DOWELS SHALL BE PARALLEL WITH EACH OTHER, PARALLEL WITH THE BEARING PLATES, AND PERPENDICULAR TO THE CENTER PLATE.

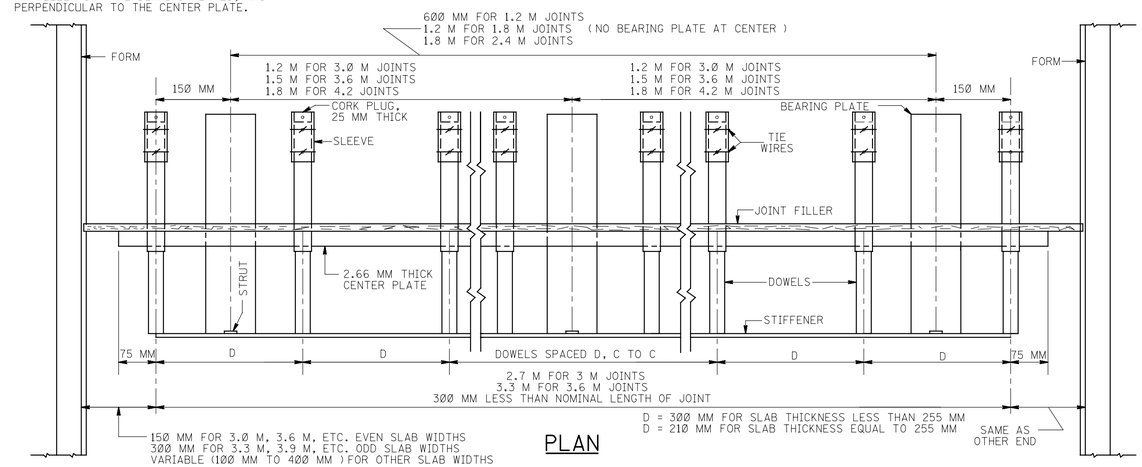

PLAN

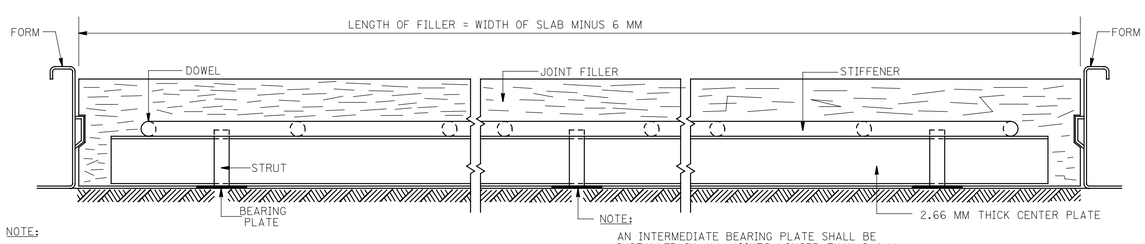

NOTE:

USE 1.2 M JOINTS FOR SLAB WIDTHS BETWEEN 1.1 M AND 1.7 M
USE 1.8 M JOINTS FOR SLAB WIDTHS BETWEEN 1.7 M AND 2.3 M
USE 2.4 M JOINTS FOR SLAB WIDTHS BETWEEN 2.3 M AND 2.9 M
USE 3.0 M JOINTS FOR SLAB WIDTHS BETWEEN 2.9 M AND 3.5 M
USE 3.6 M JOINTS FOR SLAB WIDTHS BETWEEN 3.5 M AND 4.1 M
USE 4.2 M JOINTS FOR SLAB WIDTHS BETWEEN 4.1 M AND 4.7 M

NOTE:

AN INTERMEDIATE BEARING PLATE SHALL BE INSTALLED IN ALL JOINTS LONGER THAN 2.4 M.

ELEVATION

SEE CONSTRUCTION DETAIL SHEET CD-405-2 FOR DETAILS TO BE USED IN CONJUNCTION WITH THE INSTALLATION OF THIS JOINT.

CD-405-5.1

DOWEL SPECIFICATIONS

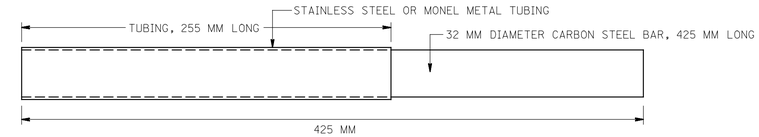

THE DOWELS SHALL CONSIST OF EITHER (a) 32 MM DIAMETER SOLID STAINLESS STEEL BARS, (b) 32 MM DIAMETER CARBON STEEL BARS ENCASED IN STAINLESS STEEL OR MONEL METAL, OR (c) 32 MM DIAMETER CARBON STEEL BARS THAT HAVE BEEN IMPREGNATED WITH CHROMIUM THROUGHOUT THEIR EXPOSED SURFACE. THE STAINLESS STEEL SHALL CONTAIN NOT LESS THAN 12 PERCENT CHROMIUM. IF ENCASED IN STAINLESS STEEL OR MONEL METAL, THE THICKNESS OF THE STAINLESS STEEL OR MONEL METAL SHALL NOT BE LESS THAN 0.25 MM, AND THE TIGHTNESS OF FIT SHALL BE SUCH AS TO PRECLUDE THE OCCURRENCE OF CORROSION BETWEEN THE STAINLESS STEEL OR MONEL METAL AND THE UNDERLYING CARBON STEEL. IF RENDERED CORROSION-RESISTANT BY IMPREGNATION WITH CHROMIUM, THE LAYER OF METAL WHICH HAS BEEN SO IMPREGNATED SHALL HAVE (a) AN AVERAGE THICKNESS OF NOT LESS THAN 0.23 MM, (b) AT NO POINT A THICKNESS OF LESS THAN 0.20 MM, AND (c) AN AVERAGE CHROMIUM CONTENT OF NOT LESS THAN 20 PERCENT, BY WEIGHT. THE CONTRACTOR SHALL FURNISH THE ENGINEER WITH A CERTIFICATION SHOWING THAT THE MEANS EMPLOYED FOR RENDERING THE DOWELS CORROSION-RESISTANT COMPLIES WITH THE FOREGOING SPECIFICATIONS.

THE DOWELS SHALL NOT VARY IN STRAIGHTNESS THROUGHOUT THEIR LENGTH IN EXCESS OF 1 MM. THE SLIDING PORTION OF THE DOWEL SHALL BE OF UNIFORM CROSS SECTION, FREE FROM BURRS, PROJECTIONS, AND ANY OTHER IRREGULARITIES THAT WOULD INTERFERE WITH FREE MOVEMENT IN THE CONCRETE.

CD-405-5.2

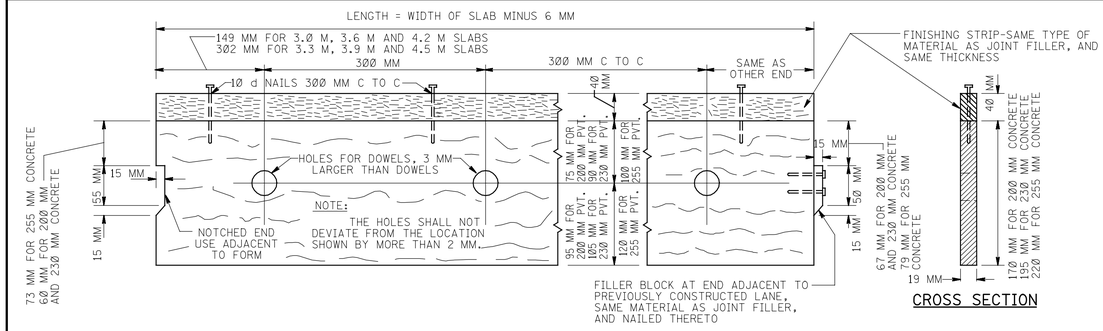

SIDE ELEVATION

CROSS SECTION

NOTE:

THE FINISHING STRIP SHALL BE ATTACHED AFTER THE REMOVAL OF THE METAL CHANNEL CAP, AND SHALL BE CENTERED DIRECTLY OVER THE FILLER AND NAILED SECURELY THERETO, AS SHOWN. IF DESIRED, THE STRIP MAY CONSIST OF TWO PIECES, OF EQUAL LENGTH, INSTALLED END TO END. THE FINISHING STRIP SHALL NOT BE REMOVED UNTIL IMMEDIATELY PRIOR TO SEALING THE JOINT WITH HOT-POURED RUBBER-ASPHALT.

NOTE:

THE FILLER SHALL BE SUPPORTED BY MEANS OF STEEL PINS, 25 MM IN DIAMETER, DRIVEN ON BOTH SIDES OF THE FILLER. THE PINS SHALL BE OF ADEQUATE LENGTH AND SUFFICIENT NUMBER TO INSURE THAT THE FILLER WILL BE HELD SECURELY IN ITS PROPER POSITION, AND THEY SHALL NOT BE REMOVED UNTIL AFTER THE FINAL PASSAGE OF THE FINISHING MACHINES.

DETAILS OF JOINT FILLER

CD-405-5.3

ALTERNATIVE JOINT DEVICES

ALTERNATIVE TRANSVERSE JOINT DEVICES SHALL COMPLY WITH THE REQUIREMENTS OF THE SPECIFICATIONS FOR TRANSVERSE EXPANSION JOINTS AND WITH THE FOLLOWING:

1. THE LOAD-TRANSFERRING CAPACITY OF THE DEVICE SHALL BE SUCH THAT, WHEN TESTED IN ACCORDANCE WITH THE PROCEDURE CURRENTLY IN USE BY THE DEPARTMENT, THE DEVICE SHALL BE CAPABLE OF TRANSFERRING A LOAD OF 15 000 KILOGRAM PER LINEAR METER OF JOINT ACROSS A SPACE 40 MILLIMETERS IN WIDTH WITH A DEFLECTION OF NOT MORE THAN 1 MILLIMETER.
2. THE TOTAL RANGE OF RELATIVE VERTICAL MOVEMENT OF ADJACENT SLAB ENDS WHICH THE DEVICE WILL PERMIT PRIOR TO POSITIVE ENGAGEMENT OF THE LOAD-TRANSFERING ELEMENTS SHALL NOT EXCEED 0.25 MILLIMETER.
3. THE DESIGN OF THE DEVICE SHALL BE SUCH THAT THE JOINT SPACE MAY BECOME AT LEAST 19 MM WIDER OR NARROWER THAN ITS CONSTRUCTED WIDTH. THE RESISTANCE TO OPENING OF THE JOINT, PER LINEAR METER, SHALL NOT EXCEED (a) 750 KILOGRAMS THROUGHOUT THE TOTAL RANGE OF MOVEMENT AND (b) 300 KILOGRAMS FOR AN INITIAL OPENING OF 3 MM.
4. THE DEVICE SHALL BE CAPABLE OF RESISTING ALL NORMAL FORCES IMPOSED DURING SHIPMENT, HANDLING, INSTALLATION AND ALL CONCRETING OPERATIONS. THE RIGIDITY AND STRENGTH OF THE DEVICE SHALL BE SUCH THAT, AFTER ASSEMBLY, A 90 KILOGRAM PERSON MAY APPLY HIS FULL WEIGHT TO ANY PART OR PARTS THEREOF WITHOUT CAUSING PERMANENT DEFORMATION OR DISPLACEMENT. THE DESIGN OF THE DEVICE SHALL BE SUCH THAT AFTER THE PAVEMENT HAS BEEN CONSTRUCTED, AND REGARDLESS OF WHETHER THE SUBGRADE IS FIRM OR SUBJECT TO DISPLACEMENT, ALL SLIDING SURFACES WILL BE PARALLEL WITH THE LONGITUDINAL AXIS OF THE PAVEMENT WITHIN A TOLERANCE OF ONE DEGREE, AND PARALLEL WITH RESPECT OF EACH OTHER WITHIN A TOLERANCE OF ZERO DEGREES, FORTY-FIVE MINUTES.
5. ALL PARTS OF THE JOINT DEVICE, THE CORROSION OF WHICH WOULD RESULT IN RESTRAINT OR A REDUCTION IN LOAD-TRANSFERRING CAPACITY, SHALL BE (a) COMPOSED OF SOLID STAINLESS STEEL, (b) ENCASED IN STAINLESS STEEL OR MONEL METAL OR (c) IMPREGNATED WITH CHROMIUM THROUGHOUT THEIR EXPOSED SURFACES. THE COMPOSITION OF THE STAINLESS STEEL, THICKNESS OF ENCASEMENT, AND REQUIREMENTS FOR IMPREGNATION WITH CHROMIUM SHALL ALL BE AS SPECIFIED ABOVE UNDER "DOWEL SPECIFICATIONS".

CD-405-5.4

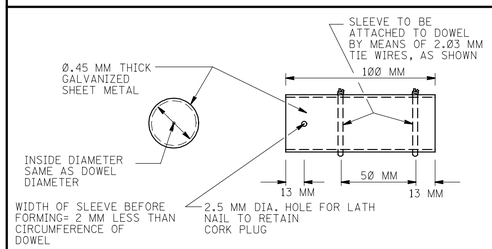

NOTE:

SLEEVES OR END CAPS OF OTHER DESIGN MAY BE SUBMITTED FOR APPROVAL. THEY SHALL FIT CLOSELY AROUND THE DOWEL AND SHALL BE DESIGNED SO AS TO POSITIVELY PREVENT THE ENTRANCE OF MORTAR INTO THE 25 MM SPACE TO BE PROVIDED AT THE END OF THE DOWEL.

DETAILS OF SHEET METAL SLEEVES

CD-405-5.5

TRANSVERSE EXPANSION JOINT TYPE A

N.T.S.

NOTE: ALL DIMENSIONS SHOWN ON THIS SHEET ARE IN MILLIMETERS UNLESS OTHERWISE NOTED.

CD-405-5

NEW JERSEY DEPARTMENT OF TRANSPORTATION

CONSTRUCTION DETAILS

BDC01D-4 - ORIGINAL SHEET

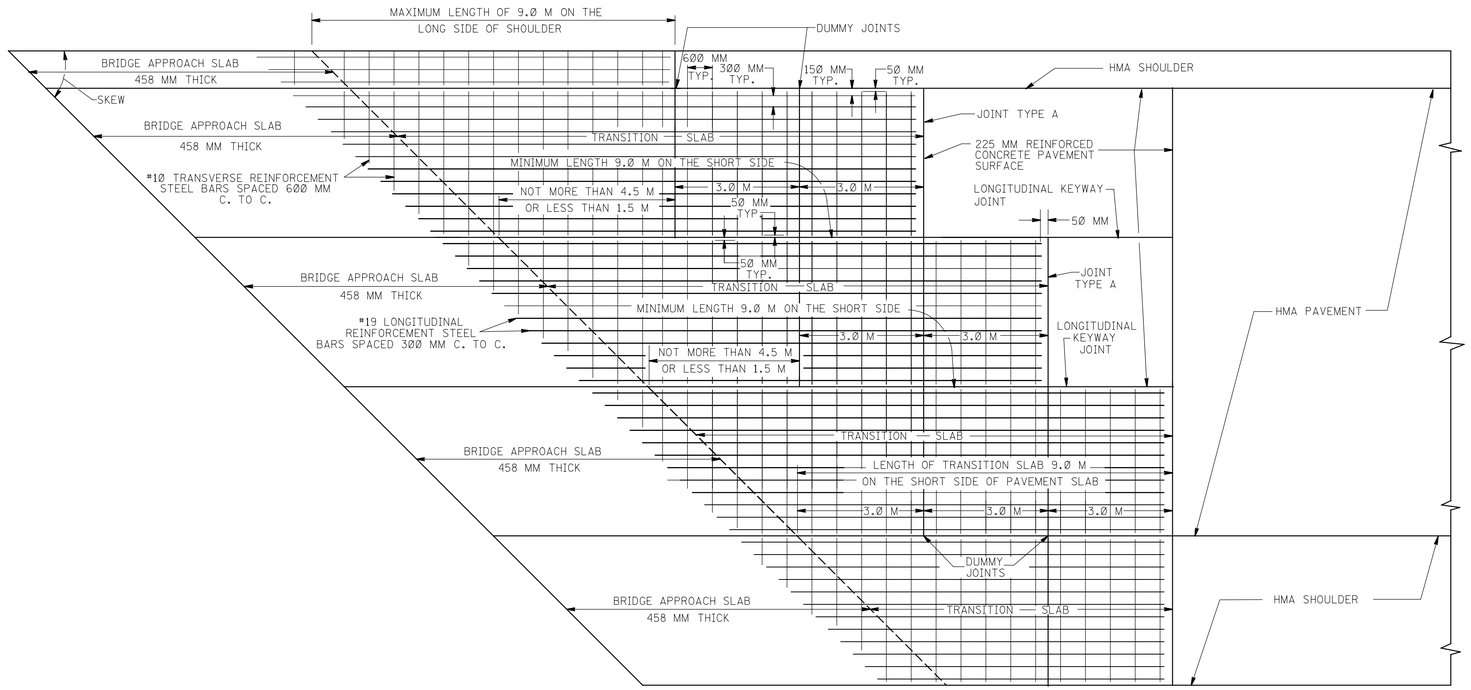

PLAN OF TRANSITION SLABS BETWEEN BITUMINOUS CONCRETE PAVEMENT AND BRIDGE APPROACH SLABS

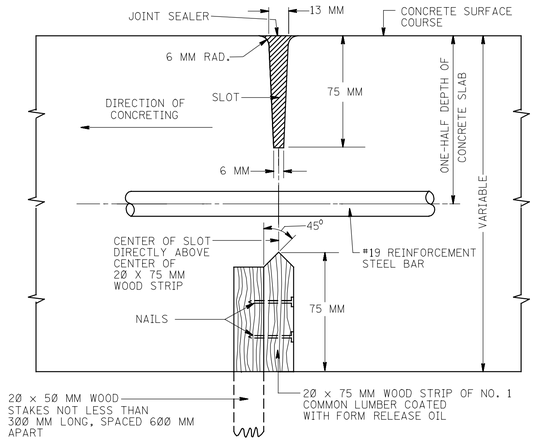

DETAIL OF DUMMY JOINT

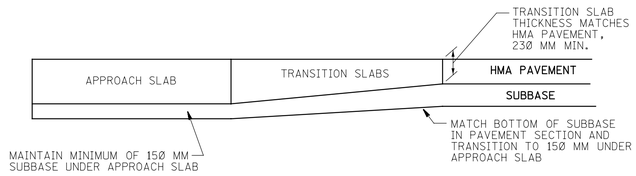

NOTE: IF WATER IS POCKETED, INSTALL OUTLET TRENCH AT LOW POINT.

TYPICAL SECTION FOR SUBBASE UNDER APPROACH AND TRANSITION SLABS

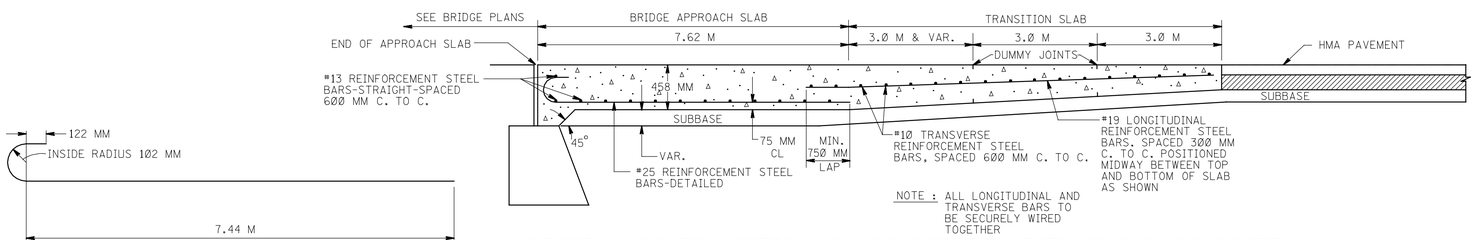

SECTION OF TRANSITION SLABS BETWEEN BITUMINOUS CONCRETE PAVEMENT AND BRIDGE APPROACH SLABS

DETAIL OF #25 BARS

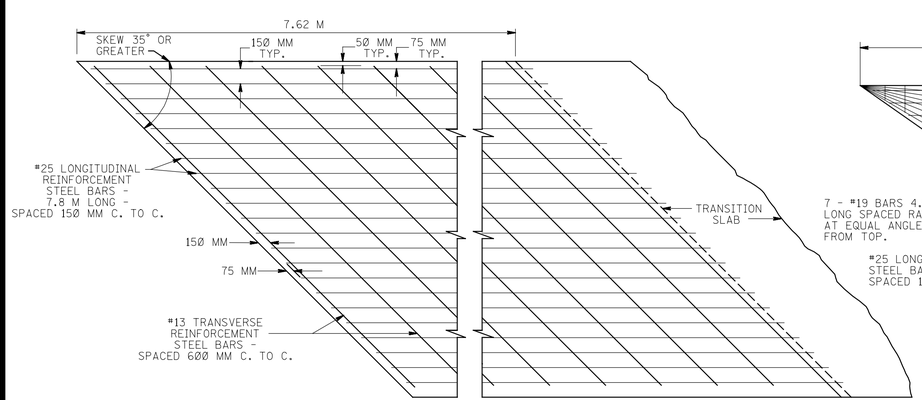

DETAIL FOR BRIDGE APPROACH SLABS WHEN SKEW ANGLE IS 35° OR GREATER

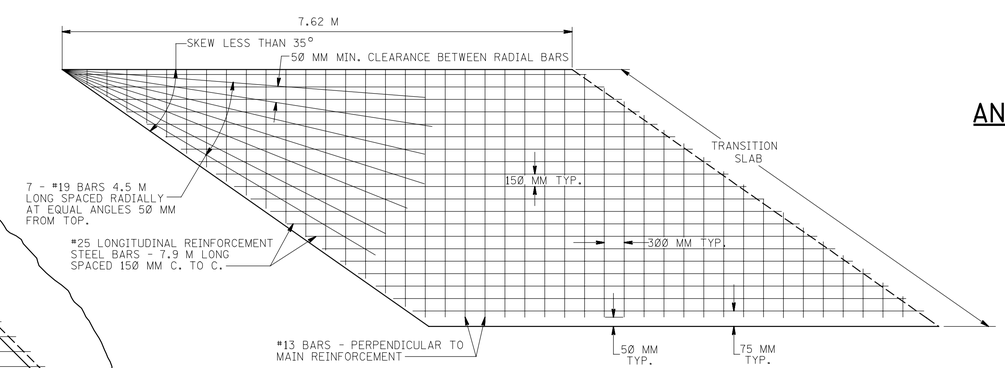

DETAIL FOR BRIDGE APPROACH SLABS WHEN SKEW ANGLE IS LESS THAN 35°

NOTE: ALL DIMENSIONS SHOWN ON THIS SHEET ARE IN MILLIMETERS UNLESS OTHERWISE NOTED.

CD-405-6.1

BRIDGE APPROACH SLABS AND TRANSITION SLABS ADJOINING HMA PAVEMENT

HMA= HOT MIX ASPHALT

N.T.S.

CD-405-6

NEW JERSEY DEPARTMENT OF TRANSPORTATION

CONSTRUCTION DETAILS

BDC201D-4 - ORIGINAL SHEET

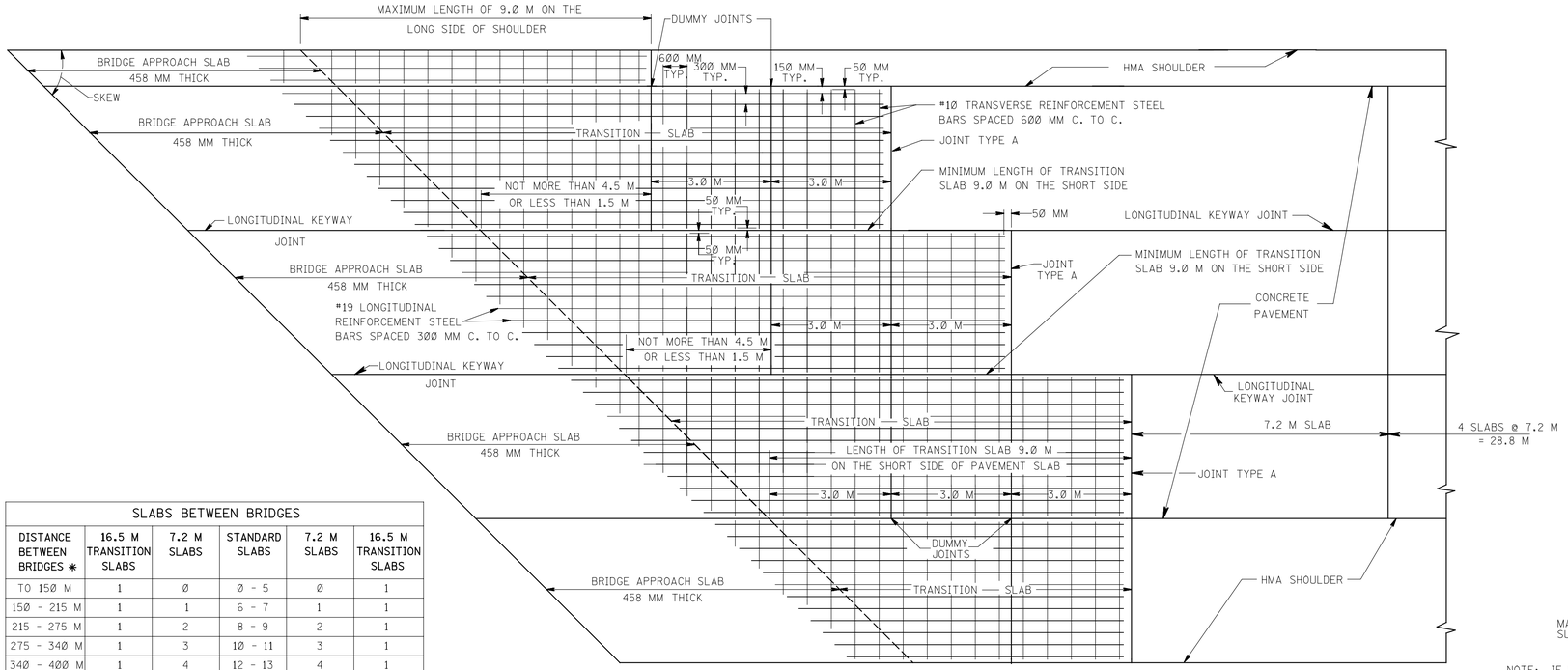

SLABS BETWEEN BRIDGES					
DISTANCE BETWEEN BRIDGES *	16.5 M TRANSITION SLABS	7.2 M SLABS	STANDARD SLABS	7.2 M SLABS	16.5 M TRANSITION SLABS
TO 150 M	1	0	0 - 5	0	1
150 - 215 M	1	1	6 - 7	1	1
215 - 275 M	1	2	8 - 9	2	1
275 - 340 M	1	3	10 - 11	3	1
340 - 400 M	1	4	12 - 13	4	1
OVER 400 M	1	5	AS REQ'D.	5	1

* LENGTH OF PAVEMENT BETWEEN BRIDGES

PLAN OF TRANSITION SLABS BETWEEN STANDARD CONCRETE PAVEMENT AND BRIDGE APPROACH SLABS

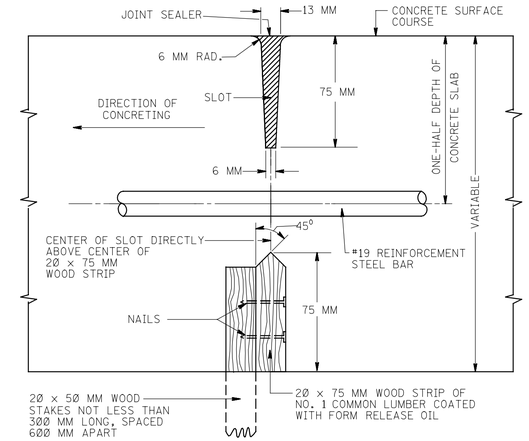

DETAIL OF DUMMY JOINT

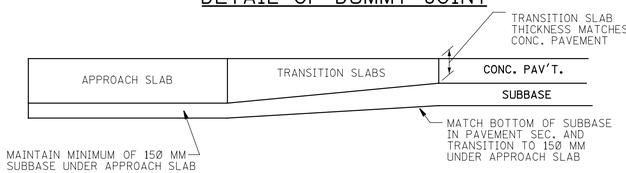

NOTE: IF WATER IS POCKETED, INSTALL OUTLET TRENCH AT LOW POINT.

TYPICAL SECTION FOR SUBBASE UNDER APPROACH AND TRANSITION SLABS

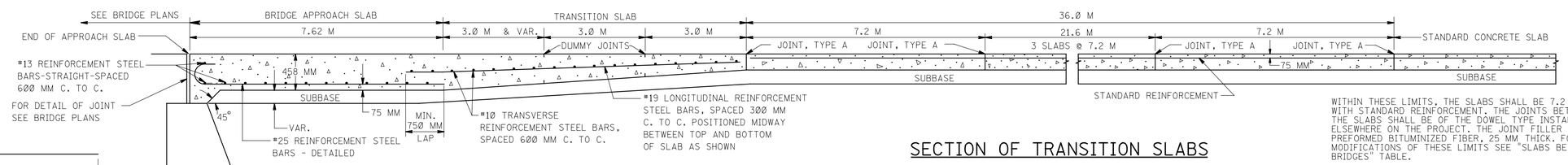

WITHIN THESE LIMITS, THE SLABS SHALL BE 7.2 M LONG, WITH STANDARD REINFORCEMENT. THE JOINTS BETWEEN THE SLABS SHALL BE OF THE DOWEL TYPE INSTALLED ELSEWHERE ON THE PROJECT. THE JOINT FILLER SHALL BE PREFORMED BITUMINIZED FIBER, 25 MM THICK. FOR MODIFICATIONS OF THESE LIMITS SEE "SLABS BETWEEN BRIDGES" TABLE.

SECTION OF TRANSITION SLABS BETWEEN STANDARD PAVEMENT AND BRIDGE APPROACH SLABS

DETAIL OF #25 BARS

NOTE: ALL LONGITUDINAL AND TRANSVERSE BARS TO BE SECURELY WIRED TOGETHER

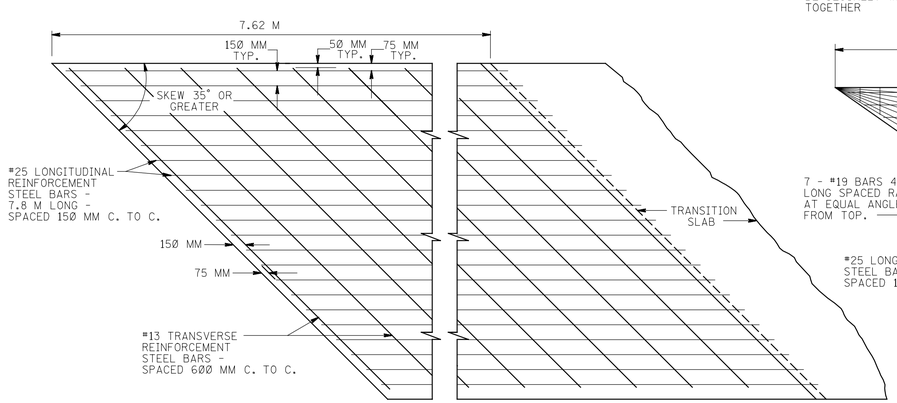

DETAIL FOR BRIDGE APPROACH SLABS WHEN SKEW ANGLE IS 35° OR GREATER

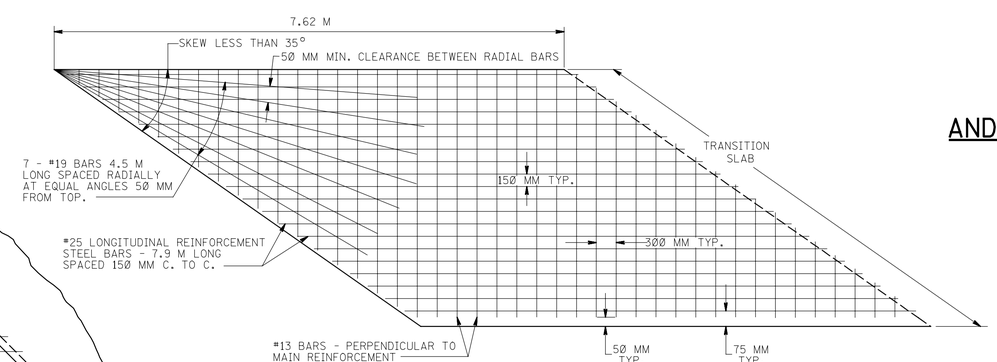

DETAIL FOR BRIDGE APPROACH SLABS WHEN SKEW ANGLE IS LESS THAN 35°

CD-405-7.1

NOTE: ALL DIMENSIONS SHOWN ON THIS SHEET ARE IN MILLIMETERS UNLESS OTHERWISE NOTED.

HMA = HOT MIX ASPHALT

BRIDGE APPROACH SLABS AND TRANSITION SLABS ADJOINING CONCRETE PAVEMENT

N.T.S.

CD-405-7

NEW JERSEY DEPARTMENT OF TRANSPORTATION

CONSTRUCTION DETAILS

RDC010-4 - ORIGINAL SHEET

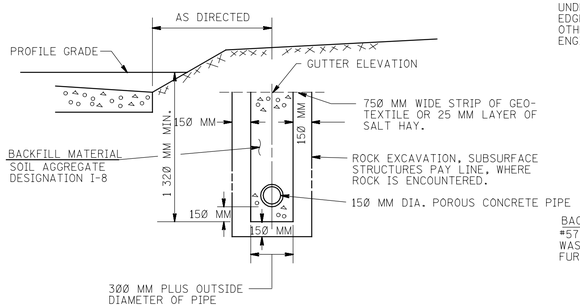

UNDERDRAIN TYPE F WITH POROUS PIPE

NOTE;

UNDERDRAIN IS SHOWN PARALLEL TO THE EDGE OF PAVEMENT, BUT MAY BE USED IN OTHER LOCATIONS IF SO DIRECTED BY THE ENGINEER.

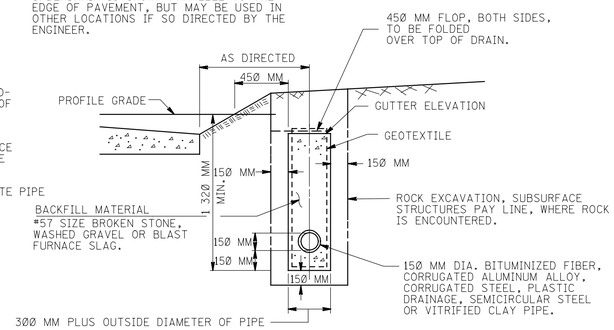

UNDERDRAIN TYPE F WITH PERFORATED PIPE

NOTE: EITHER UNDERDRAIN TYPE F WITH PERFORATED PIPE OR UNDERDRAIN TYPE F WITH POROUS PIPE MAY BE USED AT THE OPTION OF THE CONTRACTOR.

CD-601-1.1

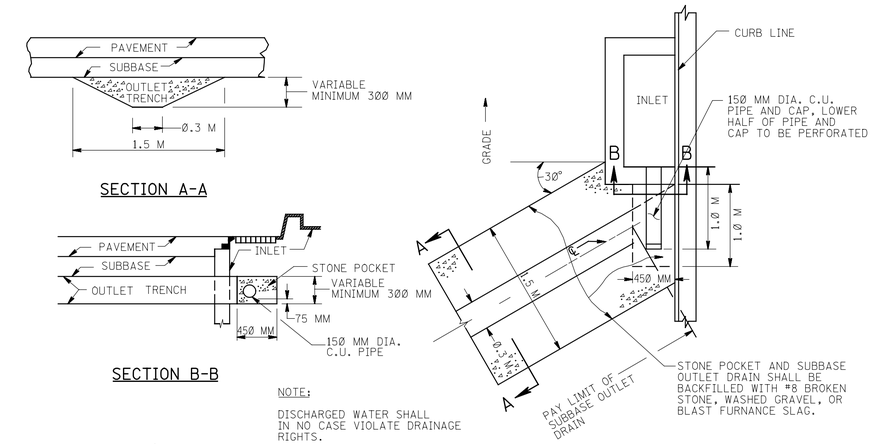

NOTE;

DISCHARGED WATER SHALL IN NO CASE VIOLATE DRAINAGE RIGHTS.

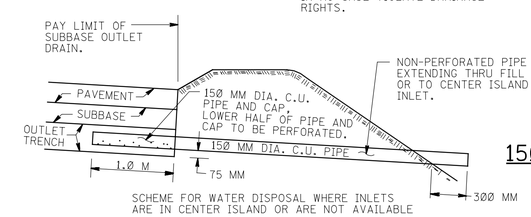

SUBBASE OUTLET DRAIN WITH 150 MM CORRUGATED UNDERDRAIN PIPE

CD-601-1.2

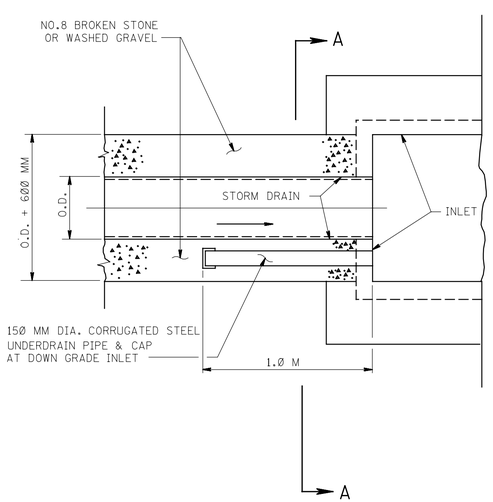

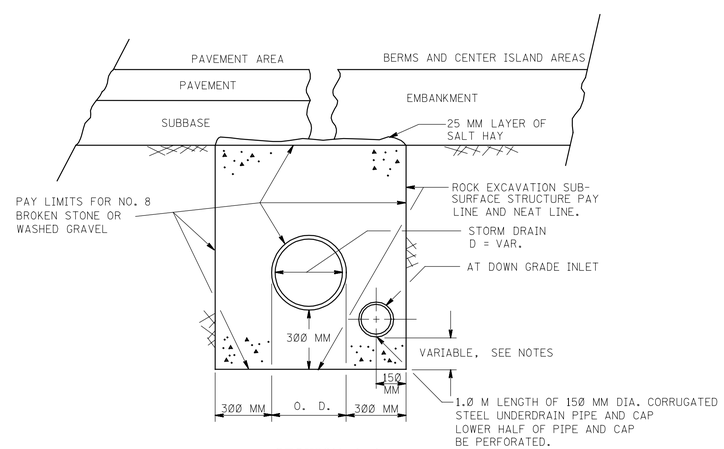

SECTION A-A

NOTE;

INVERT OF 150 MM DIA. STEEL PIPE TO BE 150 MM ABOVE BOTTOM OF INLET OR 150 MM ABOVE BOTTOM OF TRENCH WHICHEVER IS HIGHER.

COMBINED STORM DRAIN AND OUTLET TRENCH IN ROCK CUTS

CD-601-1.3

NOTE: ALL DIMENSIONS SHOWN ON THIS SHEET ARE IN MILLIMETERS UNLESS OTHERWISE NOTED.

UNDERDRAINS

N.T.S.

CD-601-1

NEW JERSEY DEPARTMENT OF TRANSPORTATION

CONSTRUCTION DETAILS

BDC01D-4 - ORIGINAL SHEET

PIPE DIAMETER (MM)	STEEL GA.	ALUM. GA.	DIMENSIONS (MM)	
			L	C
300	16	16	525	900
375	16	16	630	1100
450	16	16	775	1300
525	16	16	900	1500
600	16	16	1025	1700
750	14	14	1275	2100
900	14	12	1500	2500
1050	12	12	1725	2900
1200	12	12	1950	3150
1350	12	12	2100	3450
1500	12	12	2175	3750
1650	12	12	2175	3900
1800	12	12	2175	4050
1950	12	12	2175	4200
2100	12	12	2175	4350

ROUND PIPE

ARCH PIPE DIMENSION (MM)		STEEL GA.	ALUM. GA.	DIMENSIONS (MM)	
SPAN	RISE			L	C
430	330	16	16	475	1100
530	380	16	16	575	1250
610	460	16	16	700	1450
710	510	16	16	800	1650
885	610	14	14	975	2000
1060	740	14	14	1150	2475
1240	840	12	12	1350	2775
1440	970	12	12	1575	3150
1620	1100	12	12	1750	3450
1800	1200	12	12	1925	3750
1950	1320	12	12	1925	4050
2100	1450	12	12	1925	4350

ARCH PIPE

NOTES:

1. MINOR VARIATIONS TO THE ABOVE DIMENSIONS ARE ACCEPTABLE WITH THE EXCEPTION OF THE INSIDE DIAMETER DIMENSION.
2. A 25 MM THICK MORTAR BED AND A 150 MM DEEP LAYER OF COURSE AGGREGATE ARE REQUIRED WHEN A PRECAST CONCRETE CUTOFF WALL IS USED.
3. NO SEPARATE PAYMENT WILL BE MADE FOR THE CONCRETE CUTOFF WALL. THE COST OF THE CONCRETE CUTOFF WALL SHALL BE INCLUDED IN THE COST OF THE END SECTION.
4. REFER TO NOTE 4, CD-602-1.2 FOR SIZE OF CONCRETE CUTOFF WALL.

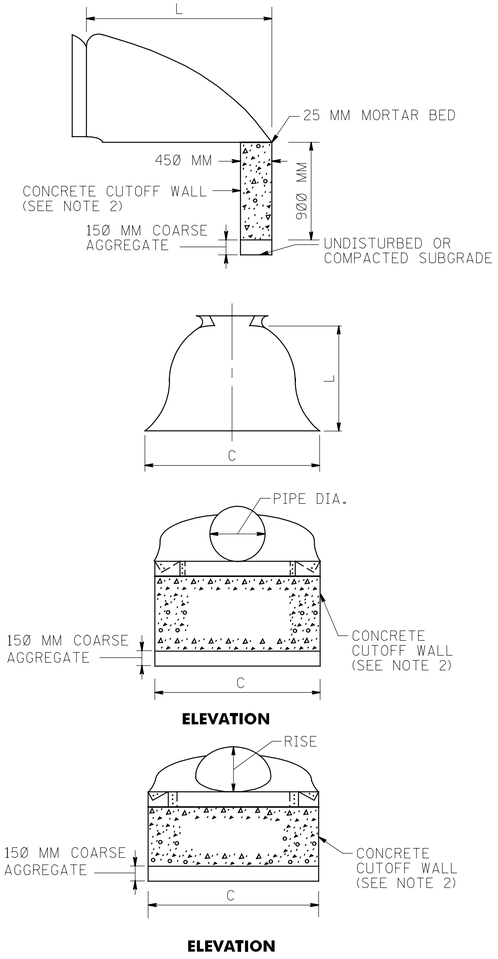

END SECTIONS FOR METAL PIPE

CD-602-1.1

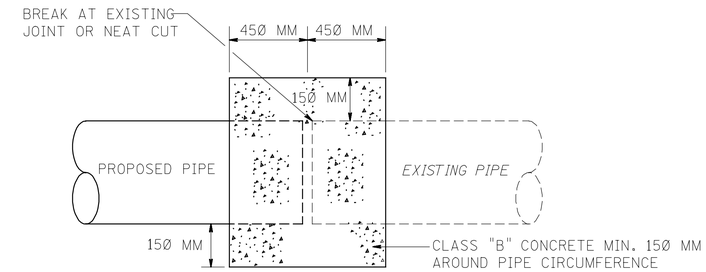

NOTE:

COAT ALL SURFACES TO BE ENCASED IN CONCRETE COLLAR WITH APPROVED EPOXY BONDING COMPOUND. NO SEPARATE PAYMENT WILL BE MADE FOR THE CONCRETE COLLAR. THE COST OF THE CONCRETE COLLAR SHALL BE INCLUDED IN THE COST OF THE VARIOUS PIPE ITEMS ON THE PROJECT.

CONCRETE COLLAR

(FOR JOINING PROPOSED PIPE TO EXISTING PIPE)

CD-602-1.3

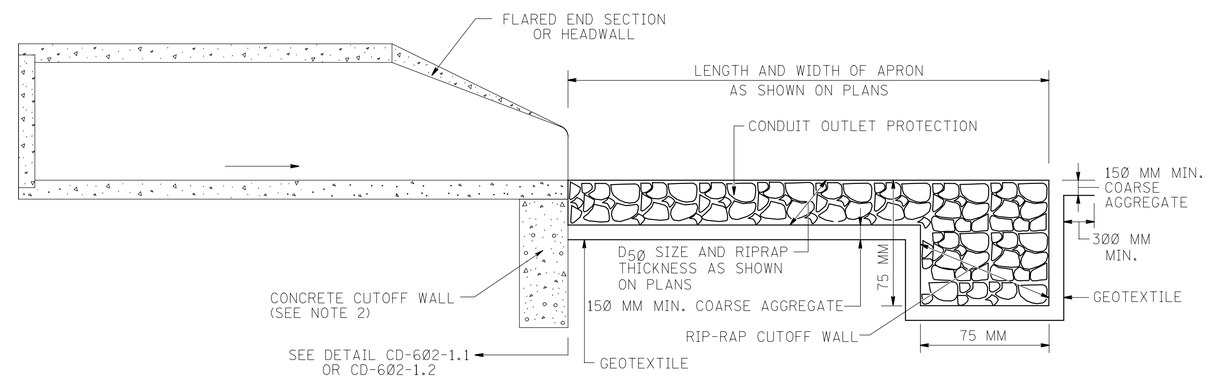

STORMWATER OUTFALL PROTECTION

CD-602-1.4

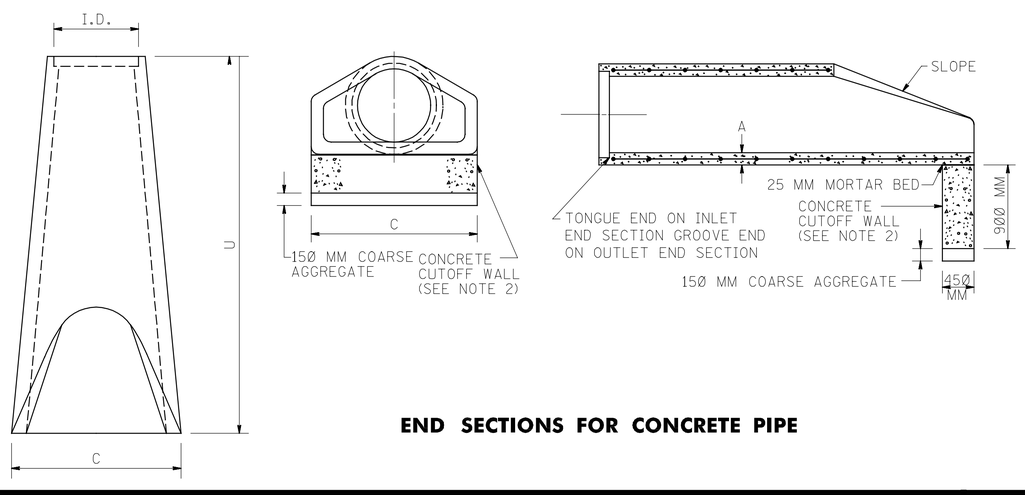

END SECTIONS FOR CONCRETE PIPE

DIMENSIONS (MM)												
I.D.	300	375	450	525	600	675	750	900	1050	1200	1350	1500
A	50	56	63	69	75	82	88	100	113	125	138	150
U	1800	1800	1800	1800	1800	1800	1800	2400	2400	2400	2400	2400
C	700	860	1025	1185	1350	1510	1675	2000	2175	2350	2525	2700

NOTES:

1. MINOR VARIATIONS TO THE ABOVE DIMENSIONS ARE ACCEPTABLE WITH THE EXCEPTION OF THE INSIDE DIAMETER DIMENSION.
2. A 25 MM THICK MORTAR BED AND A 150 MM DEEP LAYER OF COARSE AGGREGATE ARE REQUIRED WHEN A PRECAST CONCRETE CUTOFF WALL IS USED.
3. NO SEPARATE PAYMENT WILL BE MADE FOR THE CONCRETE CUTOFF WALL. THE COST OF THE CONCRETE CUTOFF WALL SHALL BE INCLUDED IN THE COST OF THE END SECTION.
4. THE WIDTH OF THE CONCRETE CUTOFF WALL SHALL BE EQUAL TO THE MAXIMUM WIDTH OF THE END SECTION AS INDICATED ON THE DETAIL BY DIMENSION "C". HOWEVER, IF THE ACTUAL MAXIMUM WIDTH EXCEEDS THE CHART VALUE OF "C", THE WIDTH OF THE CONCRETE CUTOFF WALL SHALL EQUAL THE ACTUAL MAXIMUM WIDTH OF THE END SECTION.

CD-602-1.2

PIPE END SECTIONS

N.T.S.

CD-602-1

NEW JERSEY DEPARTMENT OF TRANSPORTATION

CONSTRUCTION DETAILS

BDC02D-01 - CD-602-1.3
BDC01D-4 - ORIGINAL SHEET

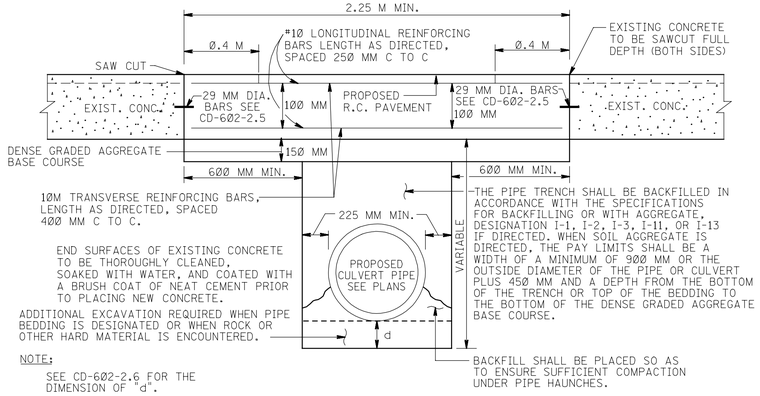

CONCRETE SURFACE COURSE REPLACEMENT AT CROSS DRAIN TRENCH

CD-602-2.1

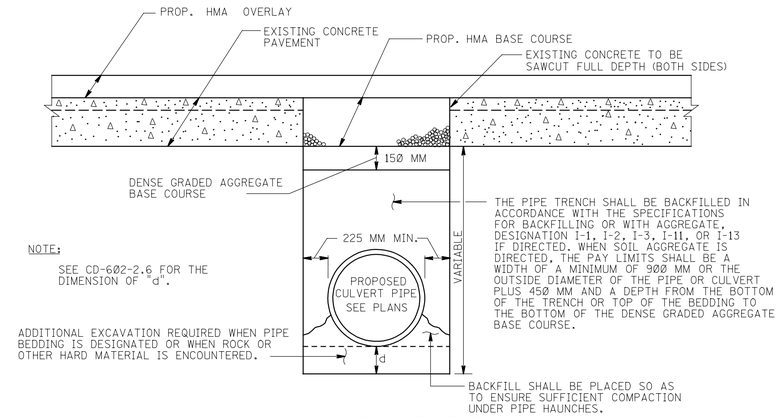

HMA REPLACEMENT WHERE EXISTING CONCRETE COURSE IS REMOVED AT CROSS DRAIN TRENCH WITH PROPOSED RESURFACING

CD-602-2.4

UNDERLYING SOIL	d	
	CONC. PIPE	METAL PIPE
ROCK OR HARD MATERIAL	150 MM	300 MM
OTHER MATERIAL	150 MM	150 MM

MINIMUM DEPTH OF ADDITIONAL EXCAVATION OR PIPE BEDDING

CD-602-2.6

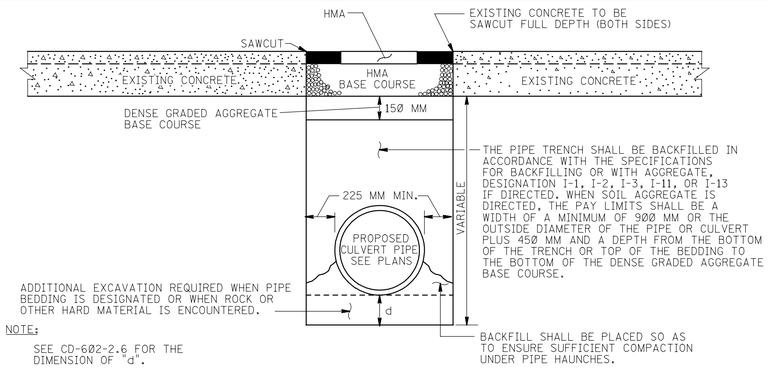

HMA REPLACEMENT WHERE CONCRETE COURSE IS REMOVED AT CROSS DRAIN TRENCH

CD-602-2.2

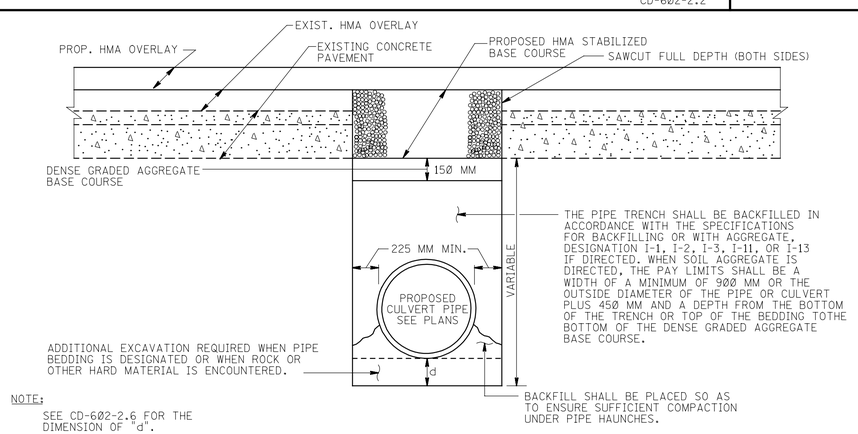

HMA REPLACEMENT WHERE EXISTING OVERLAY AND CONCRETE COURSE IS REMOVED AT CROSS DRAIN TRENCH WITH PROPOSED RESURFACING

CD-602-2.3

*FOR LANE WIDTHS OTHER THAN 3.6 M THE 600 MM CENTER SPACING SHALL BE SET AT 600 MM MAXIMUM AND VARIABLE.

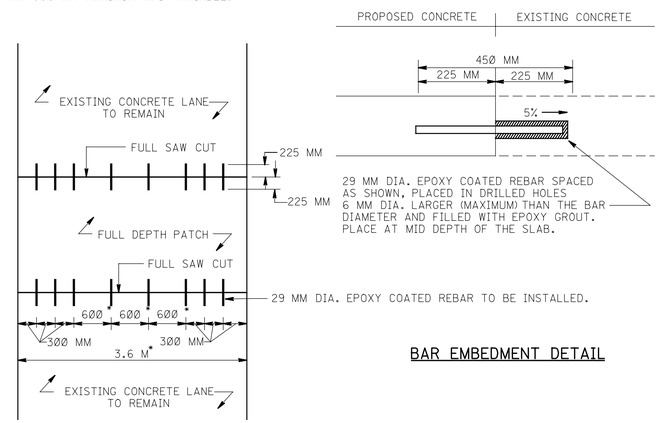

BAR EMBEDMENT DETAIL

TRANSVERSE JOINT TIE IN CONCRETE SURFACE COURSE FOR CONDUIT OR CROSS DRAIN TRENCHES

CD-602-2.5

NOTE: ALL DIMENSIONS SHOWN ON THIS SHEET ARE IN MILLIMETERS UNLESS OTHERWISE NOTED.

HMA = HOT MIX ASPHALT

CROSS DRAIN TRENCH CONSTRUCTION

N.T.S.

CD-602-2

NEW JERSEY DEPARTMENT OF TRANSPORTATION

CONSTRUCTION DETAILS

RDC010-4 - ORIGINAL SHEET

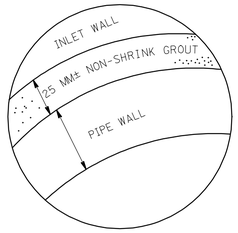

CONNECTION OF PIPE AND INLET FOR PRECAST INLET

CD-603-1.1

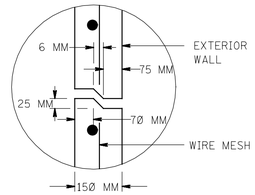

RISER JOINT DETAIL FOR PRECAST INLETS

NOTE:
JOINT TO BE SECURELY MORTARED BY CONTRACTOR

CD-603-1.2

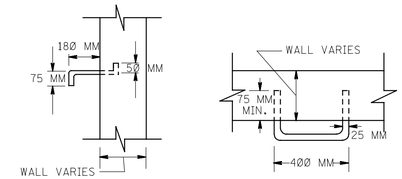

ELEVATION PLAN

NOTE:
LADDER RUNGS FACING TRAFFIC 300 MM C TO C

LADDER RUNG DETAIL

CD-603-1.3

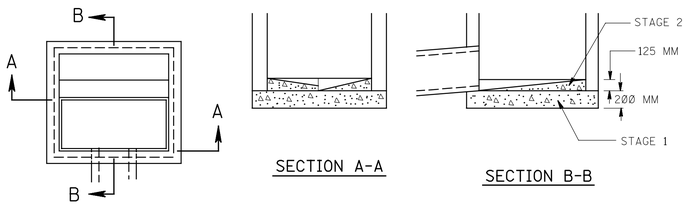

SECTION A-A SECTION B-B

NOTE:
FOUNDATION AND INVERT TO BE CONSTRUCTED IN TWO STAGES. THE TOP SURFACE OF STAGE 1 TO BE LEFT ROUGH.

DETAIL OF INVERT FOR INLET WITHOUT CONTINUOUS PIPE

CD-603-1.4

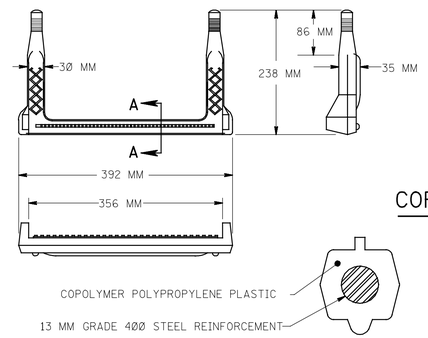

SECTION A-A

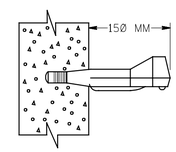

COPOLYMER POLYPROPYLENE PLASTIC LADDER RUNG

CD-603-1.5

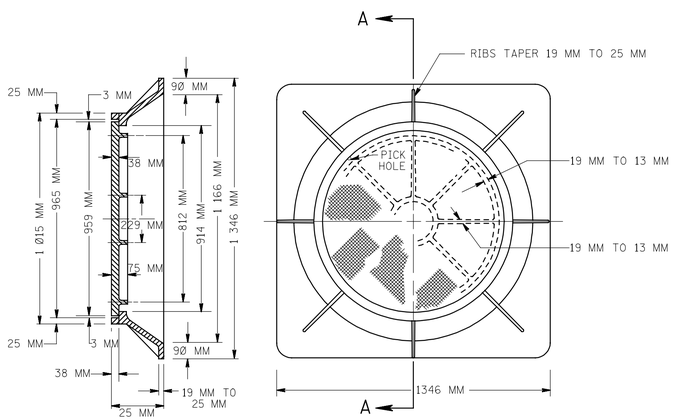

NOTES:

MINIMUM WEIGHTS

WEIGHT OF FRAME = 285 KG
WEIGHT OF COVER = 180 KG

SEE GENERAL NOTE 10, CD-603-1.6

NEW MANHOLE CASTINGS, SQUARE FRAME, CIRCULAR COVER

CD-603-1.7

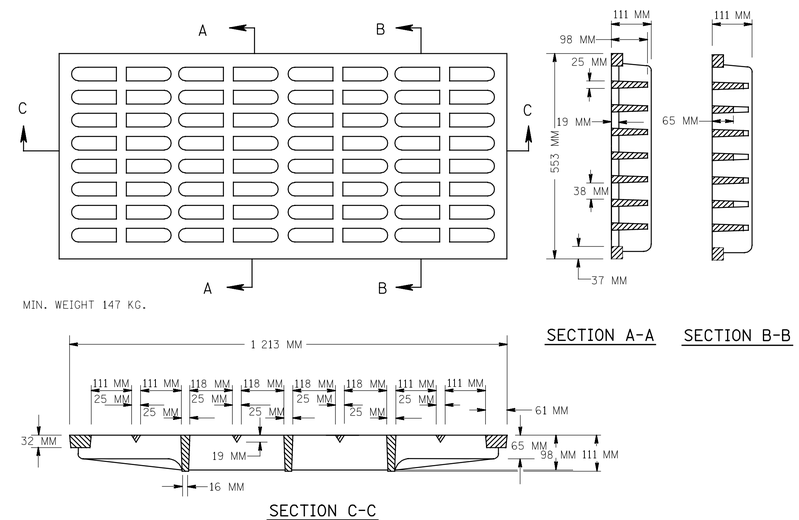

SECTION A-A SECTION B-B

SECTION C-C

NOTE:
SEE GENERAL NOTE 10, CD-603-1.6

BICYCLE SAFE GRATES

(CAST IRON)

CD-603-1.8

NOTE: ALL DIMENSIONS SHOWN ON THIS SHEET ARE IN MILLIMETERS UNLESS OTHERWISE NOTED.

GENERAL NOTES:

1. INLETS MAY BE CONSTRUCTED OF BRICK, CONCRETE, CONCRETE BLOCK OR PRECAST CONCRETE. WALLS SHALL BE 200 MM THICK IF BRICK AND 150 MM THICK IF CONCRETE, CONCRETE BLOCK OR PRECAST CONCRETE. INLET FOUNDATIONS AND INVERTS SHALL BE CLASS B CONCRETE.

2. CORBELLING OF INLET WALLS WILL BE PERMITTED AT THE RATE OF 13 MM PER 200 MM OF HEIGHT; MAXIMUM CORBEL 150 MM PER WALL.

3. EXCEPT FOR INLETS TYPE A AND C, FOUNDATIONS AND INVERTS SHALL BE CONSTRUCTED IN TWO STAGES, AND THE BOTTOM OF THE FOOTINGS SHALL BE 200 MM BELOW THE OUTER WALL OF THE LOWEST PIPE IN THE INLET.

4. WHEN THE DEPTH OF AN INLET THAT IS NOT PRECAST EXCEEDS 3.0 METERS AS MEASURED FROM TOP OF GRATE TO INVERT, WALLS BELOW A DEPTH OF 2.4 METERS SHALL BE 300 MM THICK AND THE DEPTH OF FOUNDATION INCREASED TO 300 MM. ROCK IS ENCOUNTERED THE DEPTH OF THE FOUNDATION SHALL NOT BE INCREASED.

5. INLET FOUNDATIONS WHICH ARE PRECAST SHALL BE PLACED ON A 150 MM THICK BED OF COMPACTED COARSE AGGREGATE SIZE NO. 57. THE COARSE AGGREGATE SHALL EXTEND 150 MM BEYOND THE HORIZONTAL LIMITS OF THE INLET FOUNDATION.

6. CASTINGS FOR PRECAST INLETS SHALL BE ADJUSTED TO GRADE WITH COURSES OF BRICK, AS REQUIRED, 300 MM MAXIMUM.

7. WHEN THE DEPTH OF A PRECAST INLET EXCEEDS 3.0 METERS AS MEASURED FROM TOP OF GRATE TO INVERT, THE FOUNDATION SHALL BE INCREASED TO 300 MM. WHEN ROCK IS ENCOUNTERED THE DEPTH OF THE FOUNDATON SHALL NOT BE INCREASED.

8. MINIMUM WALL REINFORCEMENT FOR PRECAST INLETS TYPES A, B, C, E, D-1, D-2 AND B MODIFIED:

DEPTH BELOW TOP OF GRATE	HORIZONTAL REINF.	VERTICAL REINF.	WALL THK.
0 M TO <3.0 M	#13 @ 250 MM C.C.	#13 @ 450 MM C.C.	150 MM
>3.0 M TO ≤4.5 M	#13 @ 200 MM C.C.	#13 @ 450 MM C.C.	150 MM
>4.5 M TO ≤6 M	#13 @ 150 MM C.C.	#13 @ 450 MM C.C.	150 MM

REINFORCING SHOWN FOR PRECAST INLETS IS THE MINIMUM REQUIRED. ADDITIONAL REINFORCING FOR HANDLING IS THE RESPONSIBILITY OF THE CONTRACTOR.

ALTERNATE REINFORCEMENT

DEPTH BELOW TOP OF GRATE	
0 M TO ≤3 M	WWF 75 × 150 W6 WIRES SPACED AT 75 MM TO RUN HORIZONTAL IN ALL CASES.
>3 M TO ≤4.5 M	WWF 75 × 150 W6 ADD 10M BAR @ 450 MM HORIZONTAL.
>4.5 M TO ≤6 M	WWF 75 × 150 W6 ADD 10M BAR @ 225 MM HORIZONTAL.

9. ALL INLETS AND MANHOLE SHALL BE CONSTRUCTED IN ACCORDANCE WITH THE CURRENT NJDOT STANDARD SPECIFICATIONS FOR ROAD AND BRIDGE CONSTRUCTION AND ITS AMENDMENTS.

10. FOR CAST IRON CLASS 30B ONLY. ANY OTHER CLASS OF CAST IRON OR TYPE OF MATERIAL MUST BE ON THE BUREAU OF MATERIALS APPROVED PRODUCTS OR NEW TECHNOLOGYS AND PRODUCTS APPROVED PRODUCTS LIST.

CD-603-1.6

INLET GENERAL DETAILS

N.T.S.

CD-603-1

NEW JERSEY DEPARTMENT OF TRANSPORTATION

CONSTRUCTION DETAILS

BDC02D-01 - CD-603-1.6, CD-603-1.7 &
CD-603-1.8
BDC01D-4 - ORIGINAL SHEET

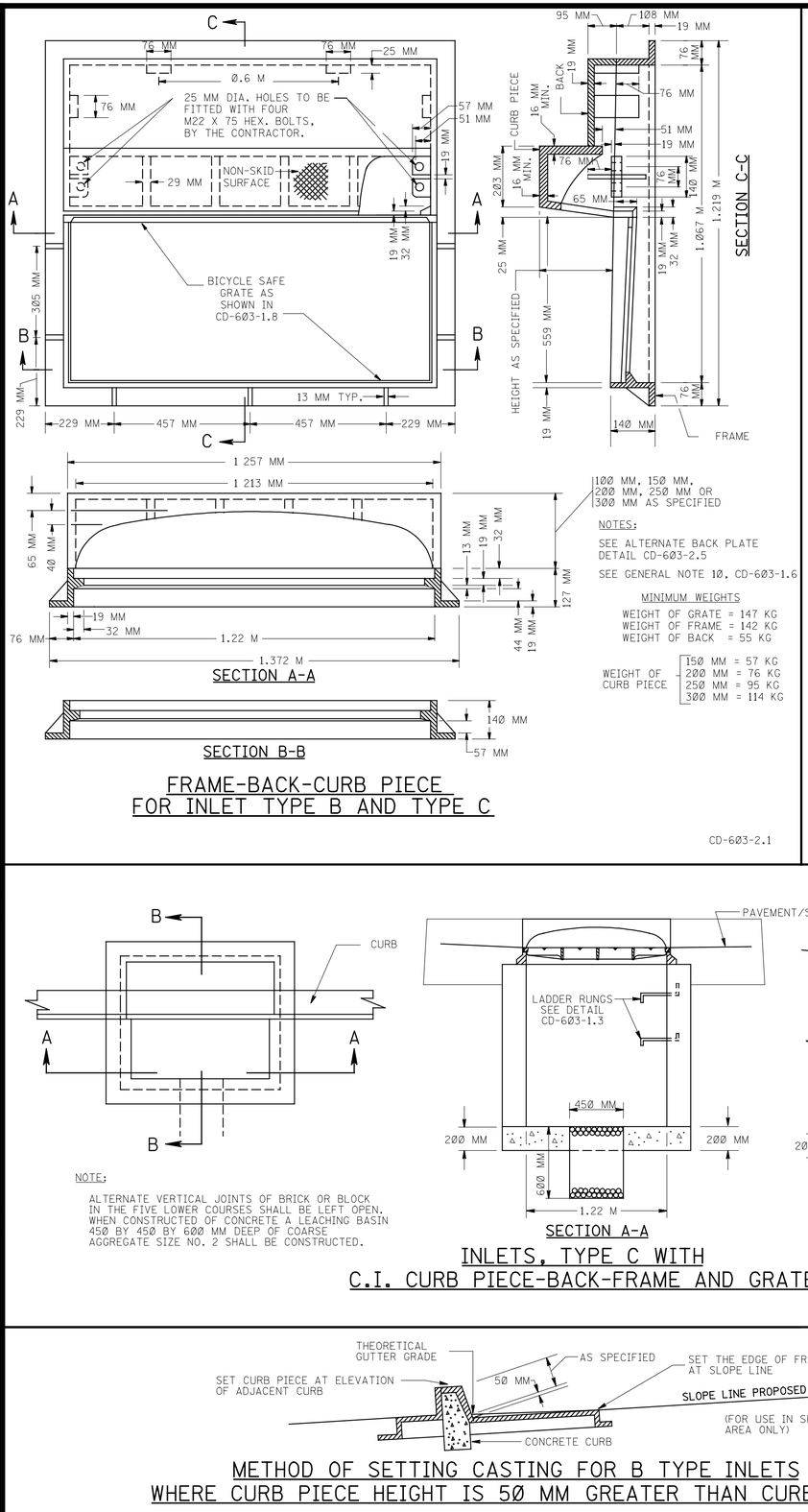

FRAME-BACK-CURB PIECE FOR INLET TYPE B AND TYPE C

CD-603-2.1

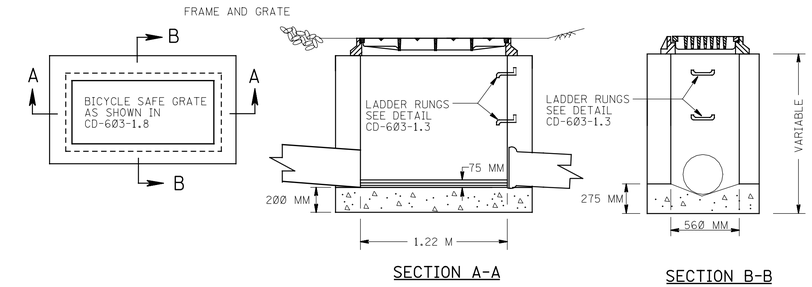

INLETS, TYPE A

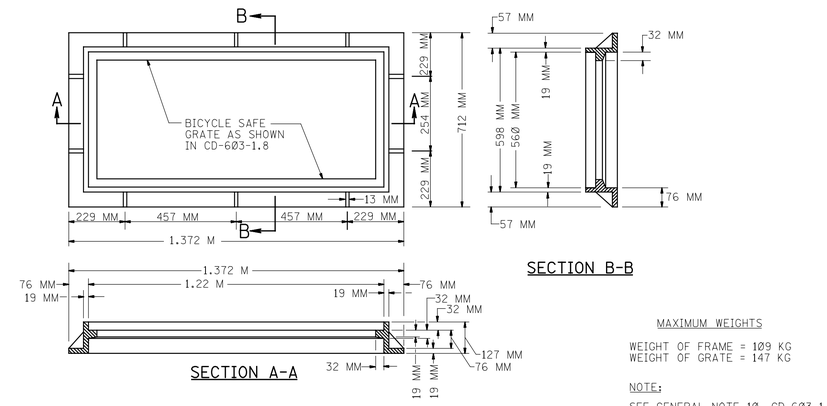

MAXIMUM WEIGHTS

WEIGHT OF FRAME = 109 KG
WEIGHT OF GRATE = 147 KG

NOTE:

SEE GENERAL NOTE 10, CD-603-1.6

FRAME TO BE USED FOR INLETS, TYPE A

CD-603-2.4

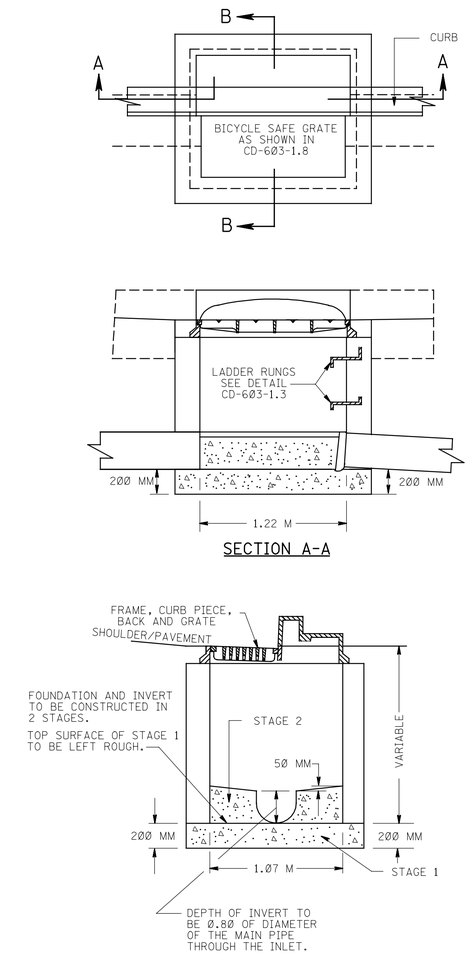

INLETS, TYPE B WITH C.I. CURB PIECE-BACK-FRAME AND GRATE

CD-603-2.6

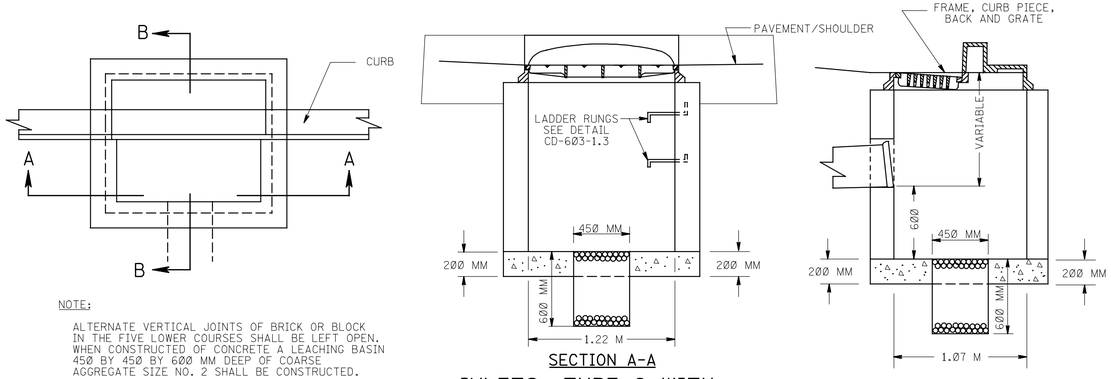

NOTE:

ALTERNATE VERTICAL JOINTS OF BRICK OR BLOCK IN THE FIVE LOWER COURSES SHALL BE LEFT OPEN. WHEN CONSTRUCTED OF CONCRETE A LEACHING BASIN 450 BY 450 BY 600 MM DEEP OF COARSE AGGREGATE SIZE NO. 2 SHALL BE CONSTRUCTED.

INLETS, TYPE C WITH C.I. CURB PIECE-BACK-FRAME AND GRATE

CD-603-2.2

NOTES:

MINIMUM WEIGHT = 55 KG

SEE GENERAL NOTE 10, CD-603-1.6

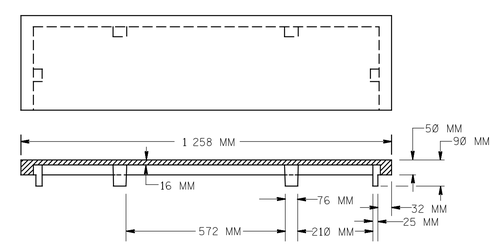

ALTERNATE BACK PLATE DETAIL

CD-603-2.5

METHOD OF SETTING CASTING FOR B TYPE INLETS WHERE CURB PIECE HEIGHT IS 50 MM GREATER THAN CURB FACE

CD-603-2.3

NOTE: ALL DIMENSIONS SHOWN ON THIS SHEET ARE IN MILLIMETERS UNLESS OTHERWISE NOTED.

INLETS, TYPE A, B & C

N.T.S.

CD-603-2

NEW JERSEY DEPARTMENT OF TRANSPORTATION

CONSTRUCTION DETAILS

BDC02D-01 - CD-603-2.1, CD-603-2.4 & CD-603-2.5
BDC01D-4 - ORIGINAL SHEET

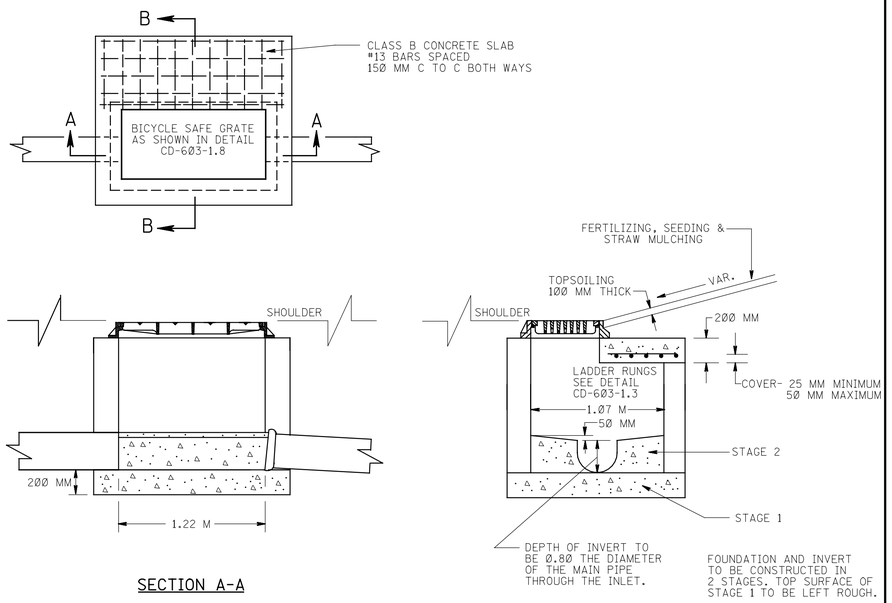

INLETS, TYPE B MODIFIED

CD-603-3.1

INLETS TYPE B1 MODIFIED OR TYPE B2 MODIFIED SHALL BE OF SAME CONSTRUCTION AND DIMENSIONS AS INLET, TYPE B MODIFIED EXCEPT AS OTHERWISE INDICATED BELOW

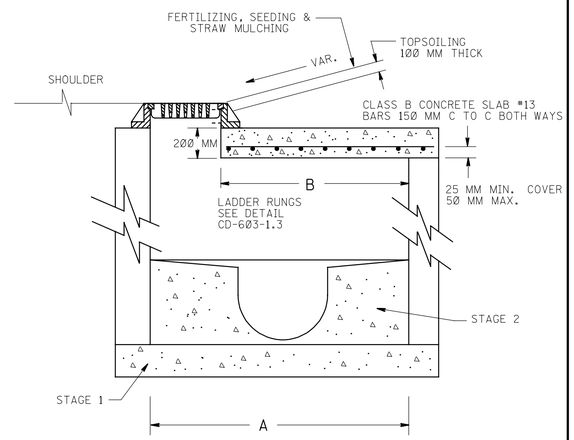

INLET TYPE	DIMENSION A	DIMENSION B
B1 MODIFIED	1.37 M	0.81 M
B2 MODIFIED	1.67 M	1.12 M

FOUNDATION AND INVERT TO BE CONSTRUCTED IN 2 STAGES. TOP SURFACE OF STAGE 1 TO BE LEFT ROUGH.

INLETS, TYPE B1 MODIFIED AND TYPE B2 MODIFIED

CD-603-3.2

NOTE:
* AT LOW POINT INCREASE TO 1.2 M

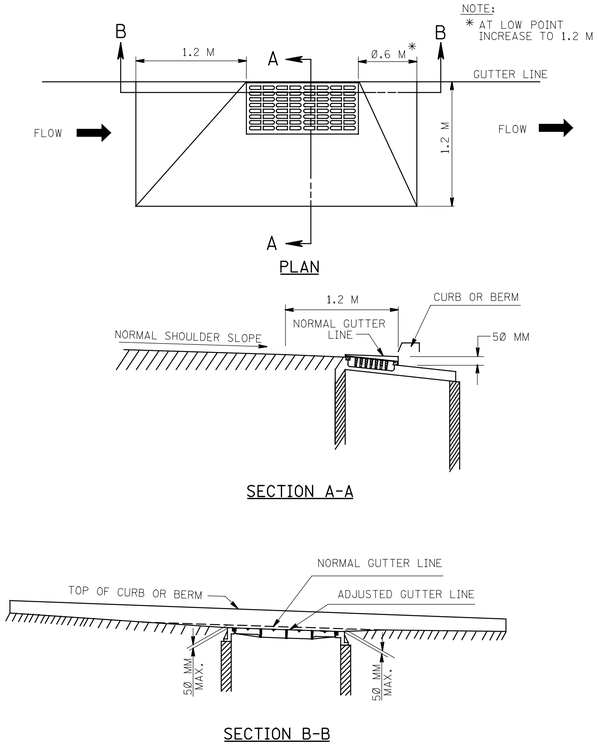

METHOD OF DEPRESSING INLETS AT SHOULDERS

CD-603-3.3

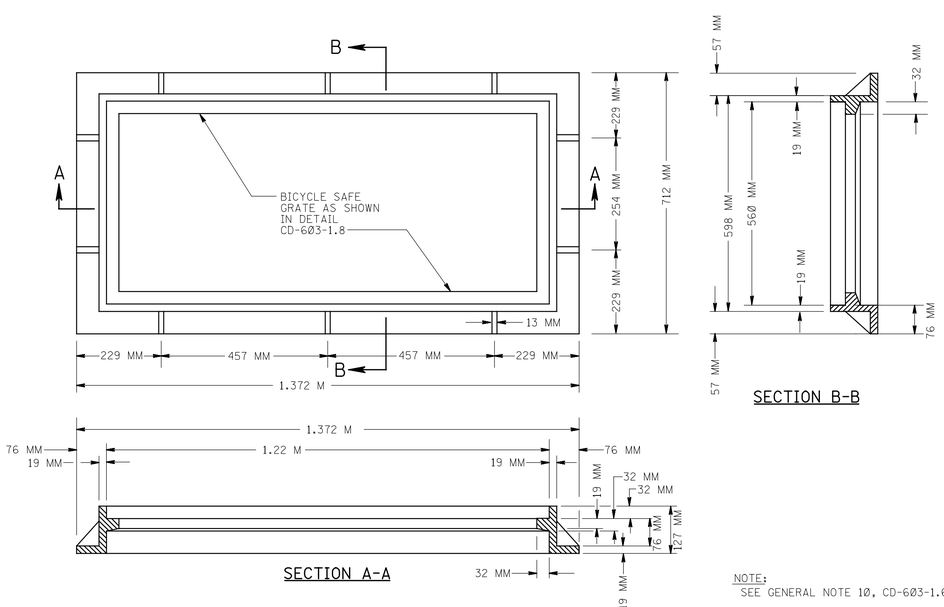

NOTE:
SEE GENERAL NOTE 10, CD-603-1.6

FRAME TO BE USED FOR INLETS, TYPE B MODIFIED

CD-603-3.4

INLETS TYPE B1 OR TYPE B2 SHALL BE OF SAME CONSTRUCTION AND DIMENSIONS AS INLET, TYPE B EXCEPT OTHERWISE INDICATED BELOW

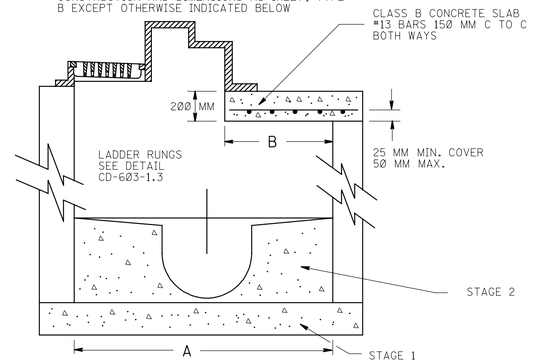

INLET TYPE	DIMENSION A	DIMENSION B
B1	1.37 M	0.30 M
B2	1.67 M	0.60 M

FOUNDATION AND INVERT TO BE CONSTRUCTED IN 2 STAGES. TOP SURFACE OF STAGE 1 TO BE LEFT ROUGH.

INLETS, TYPE B1 AND TYPE B2

CD-603-3.5

NOTE: ALL DIMENSIONS SHOWN ON THIS SHEET ARE IN MILLIMETERS UNLESS OTHERWISE NOTED.

INLETS, TYPE B1, B2, & B, B1, & B2 MODIFIED

N.T.S.

CD-603-3

NEW JERSEY DEPARTMENT OF TRANSPORTATION

CONSTRUCTION DETAILS

BDC02D-01 - CD-603-3.4
BDC01D-4 - ORIGINAL SHEET

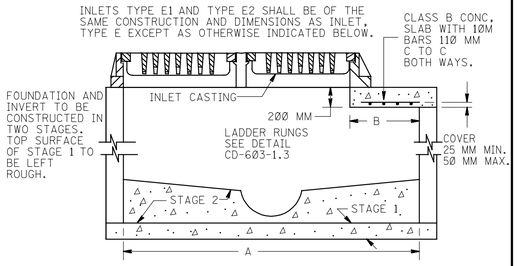

INLET TYPE	DIMENSION A	DIMENSION B
E 1	1.37 M	0.3 M
E 2	1.67 M	0.6 M

INLETS, TYPE E1 AND TYPE E2

CD-603-4.1

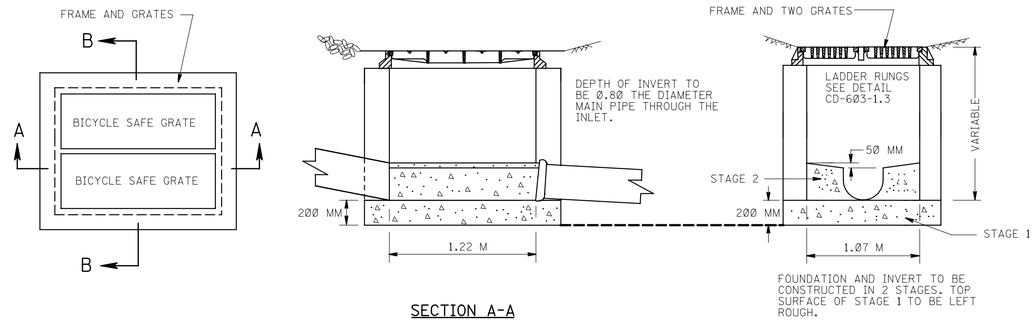

SECTION A-A

SECTION B-B

INLETS, TYPE E

CD-603-4.2

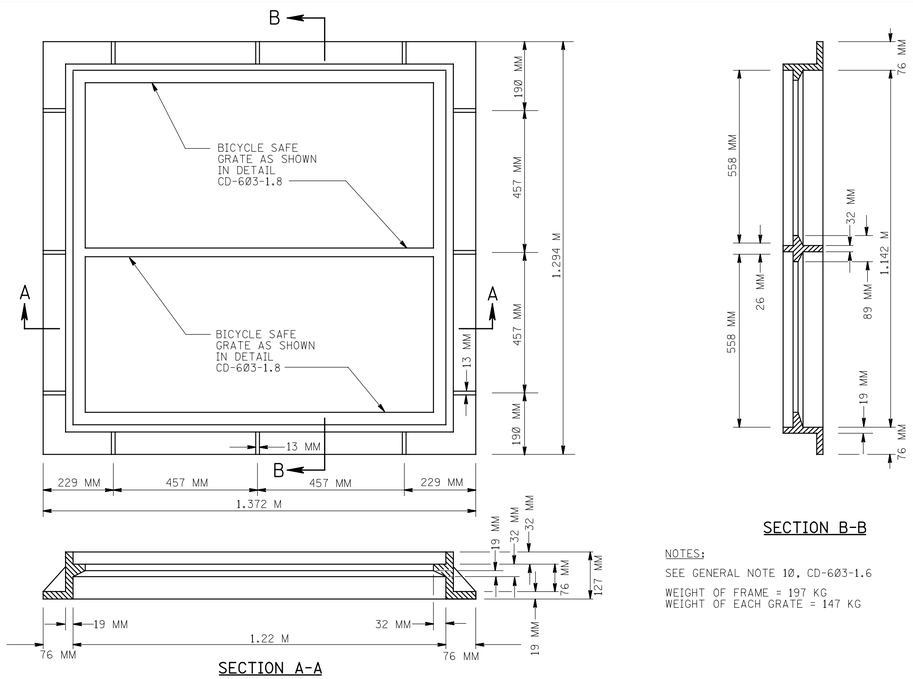

SECTION A-A

SECTION B-B

NOTES:

SEE GENERAL NOTE 10, CD-603-1.6

WEIGHT OF FRAME = 197 KG
WEIGHT OF EACH GRATE = 147 KG

FRAME TO BE USED FOR INLETS, TYPE E

CD-603-4.3

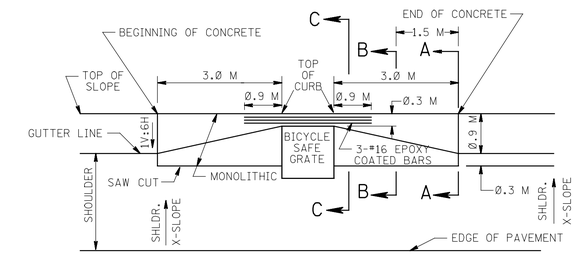

PLAN VIEW

NOTE:

THE UNDERLYING MATERIAL SHALL BE SHAPED AND COMPACTED TO A FIRM, EVEN SURFACE.

NOTE: ITEM INCLUDES

EXCAVATION
SUBBASE DES I-1 OR I-2, 150 MM TH.
CLASS B CONC. (RDWY)
HMA SURFACE COURSE
UNDERLAYER PREPARATION
TACK COAT
INLET, TYPE "E" WITH CASTING.

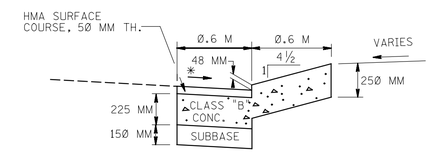

SECTION B-B

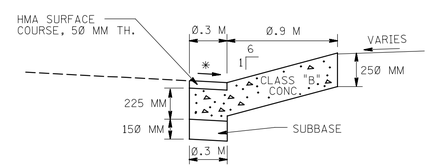

SECTION A-A

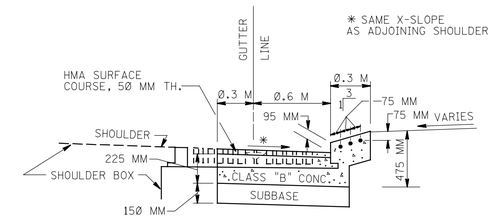

SECTION C-C

INLETS, TYPE ES

CD-603-4.4

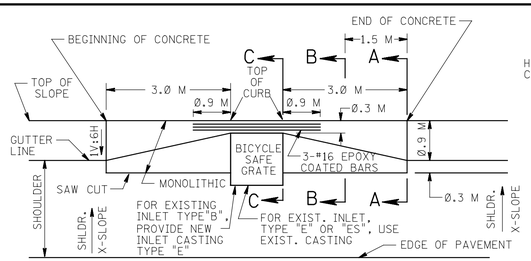

NOTE: ITEM INCLUDES

EXCAVATION
SUBBASE DES I-1 OR I-2, 150 MM TH.
CLASS B CONC. (RDW HMA SURFACE COURSE
UNDERLAYER PREPARATION
TACK COAT
INLET CASTING, TYPE "E"
IF NEEDED

PLAN VIEW

NOTE:

THE UNDERLYING MATERIAL SHALL BE SHAPED AND COMPACTED TO A FIRM, EVEN SURFACE.

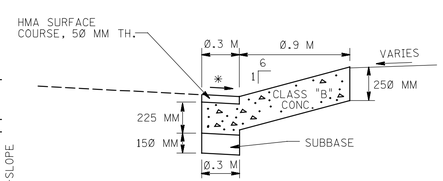

SECTION A-A

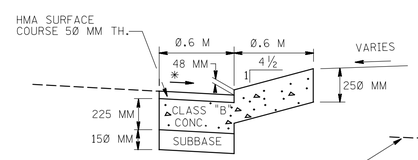

SECTION B-B

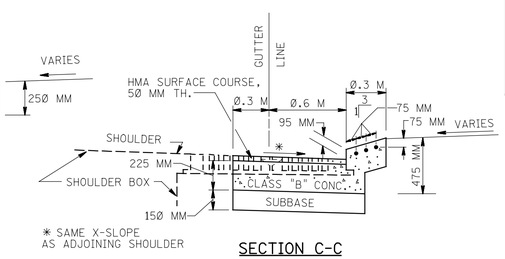

SECTION C-C

INLET CASTINGS, TYPE ES

CD-603-4.5

NOTE: ALL DIMENSIONS SHOWN ON THIS SHEET ARE IN MILLIMETERS UNLESS OTHERWISE NOTED.

HMA = HOT MIX ASPHALT

INLETS, TYPE E, E1, E2, & ES

N.T.S.

CD-603-4

NEW JERSEY DEPARTMENT OF TRANSPORTATION

CONSTRUCTION DETAILS

BDC2021-01 - CD-603-4.3
BDC2010-4 - ORIGINAL SHEET

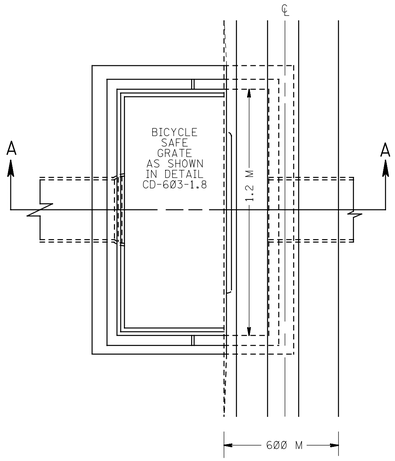

PLAN

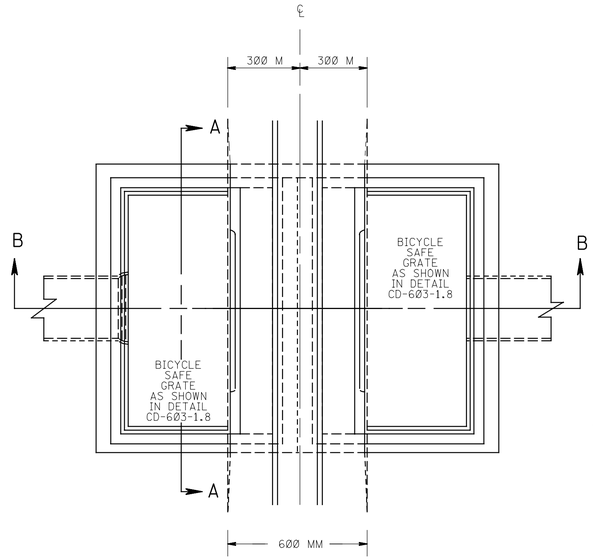

PLAN

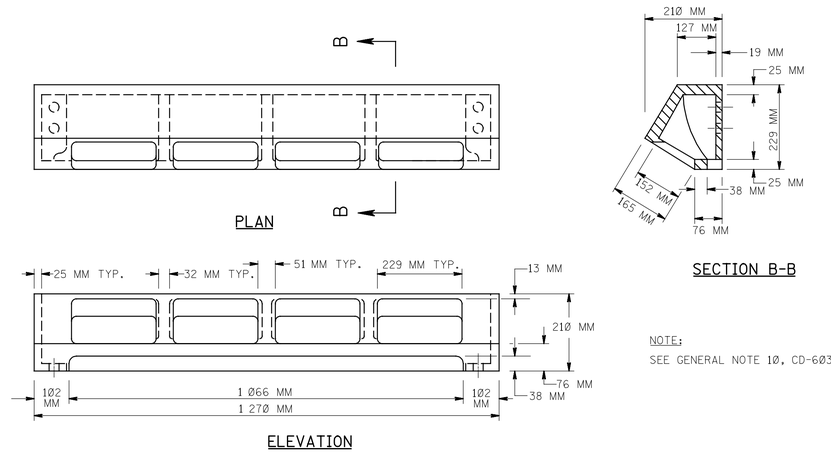

PLAN

SECTION B-B

ELEVATION

NOTE:
SEE GENERAL NOTE 10, CD-603-1.6

CAST IRON CURB PIECE FOR INLETS, TYPE D1 AND D2

CD-603-5.3

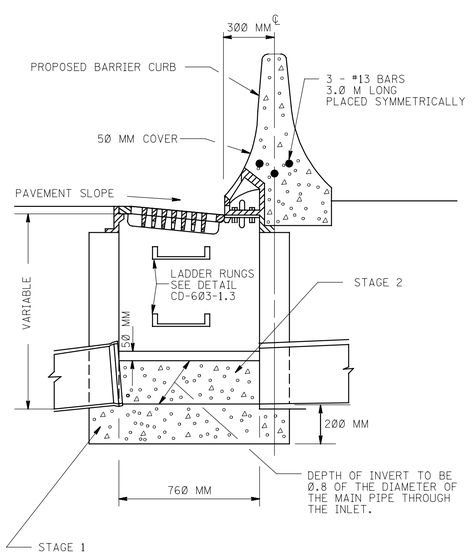

SECTION A-A

INLETS TYPE D-1

NOTE:
FOUNDATION AND INVERT TO BE CONSTRUCTED IN 2 STAGES. THE TOP SURFACE OF STAGE 1 TO BE LEFT ROUGH.

CD-603-5.1

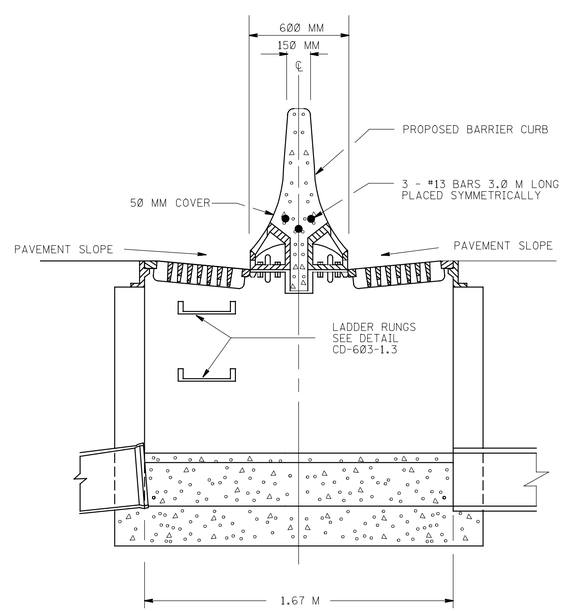

SECTION B-B

INLETS TYPE D-2

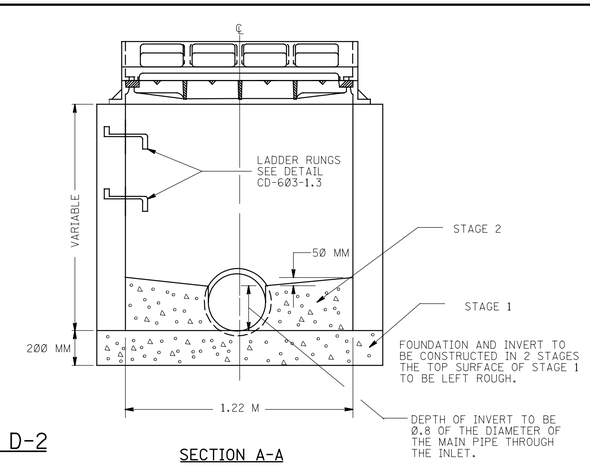

SECTION A-A

CD-603-5.2

NOTE: ALL DIMENSIONS SHOWN ON THIS SHEET ARE IN MILLIMETERS UNLESS OTHERWISE NOTED.

BDC02D-01 - CD-603-5.1, CD-603-5.2, & CD-603-5.3
BDC01D-4 - ORIGINAL SHEET

INLETS, TYPE D1 & D2

N.T.S.

CD-603-5

NEW JERSEY DEPARTMENT OF TRANSPORTATION

CONSTRUCTION DETAILS

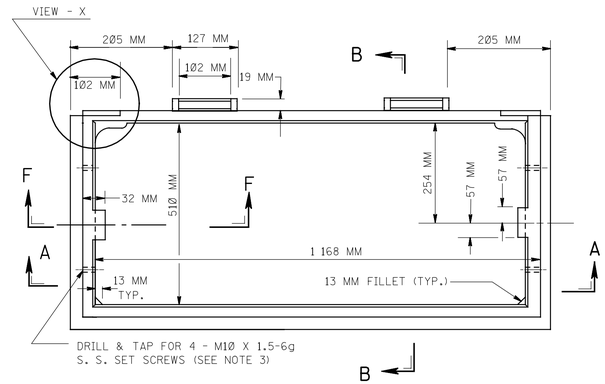

EXTENSION FRAMES
FOR INLETS, TYPE B & C
AND INLETS, TYPE D-1 & D-2

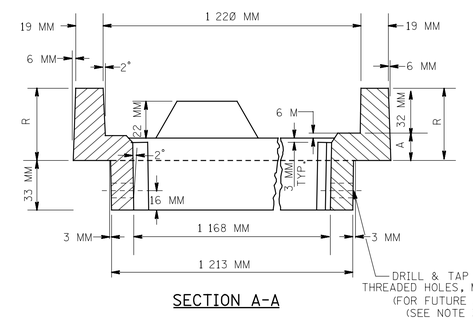

SECTION A-A

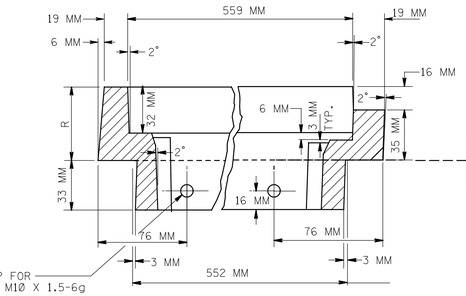

SECTION B-B

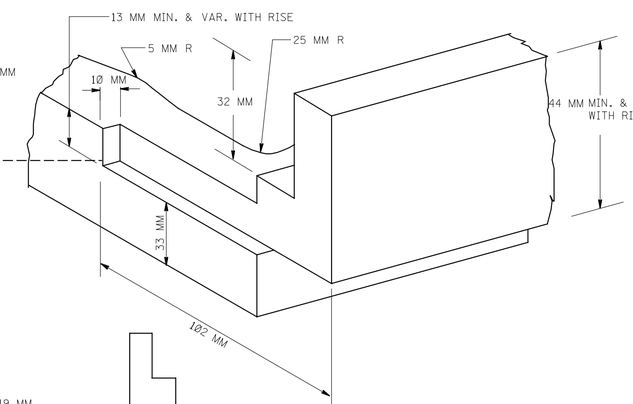

VIEW - X

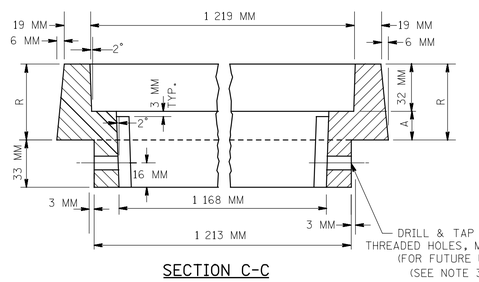

SECTION C-C

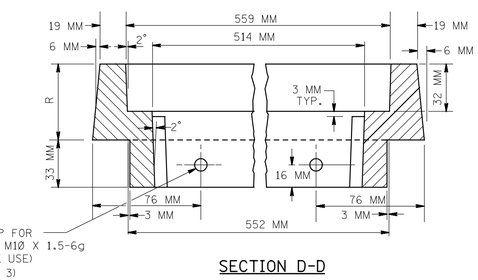

SECTION D-D

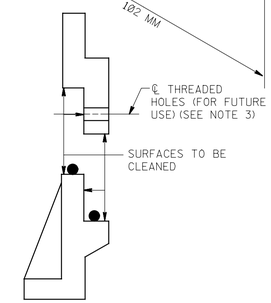

VIEW - Y

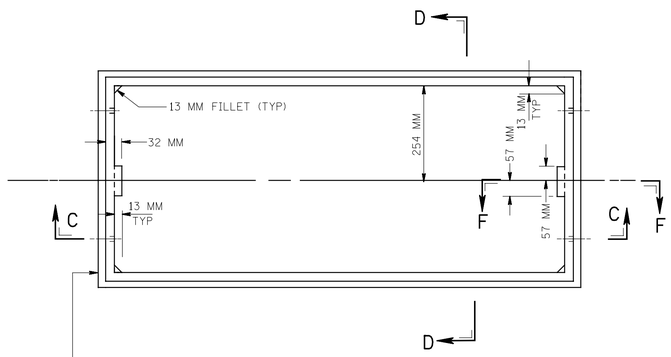

INLETS, TYPE E
1 EACH (2 UNITS)

EXTENSION FRAMES
FOR INLETS,
TYPE A AND B MODIFIED

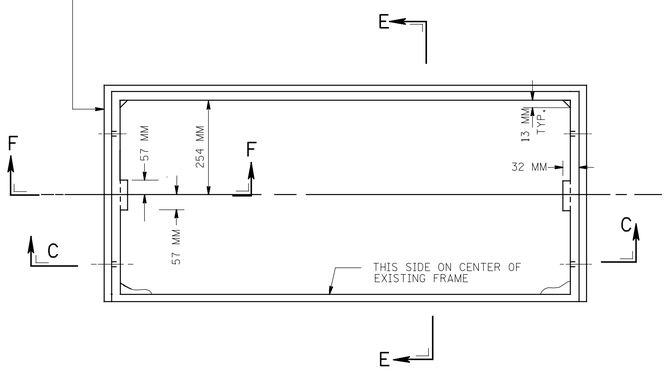

EXTENSION FRAMES
FOR INLETS, TYPE E (HALF ONLY)

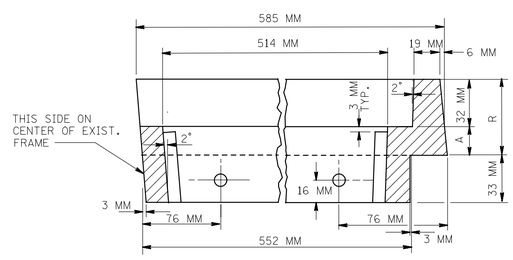

SECTION E-E

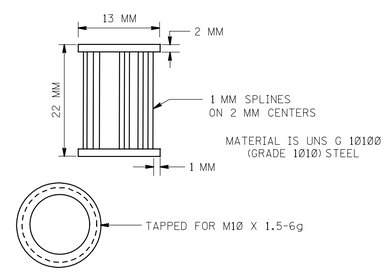

THREADED INSERT FOR EXTENSION
RING AND FRAMES
ALTERNATE

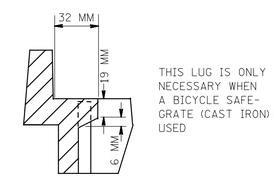

THIS LUG IS ONLY
NECESSARY WHEN
A BICYCLE SAFE-
GRATE (CAST IRON) IS
USED

SECTION F-F

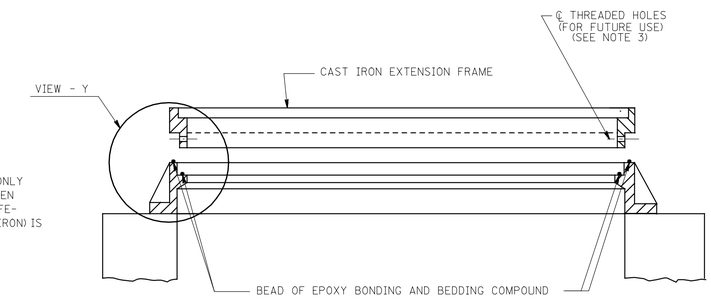

METHOD OF ATTACHING EXTENSION FRAMES

NOTES:

1. THE CONTRACTOR SHALL MEASURE THE EXISTING INLET FRAMES AND GRATES TO DETERMINE PROPER DIMENSIONS OF PROPOSED EXTENSION FRAMES BEFORE PLACING ORDER.
2. NOT TO BE USED WITH DISH GRATES.
3. A THREADED INSERT MAY BE USED AS AN ALTERNATE TO DRILLING AND TAPPING.
4. SEE GENERAL NOTE 10, CD-603-1.6

RISE=R	A
44 MM	13 MM
51 MM	19 MM
64 MM	32 MM
76 MM	44 MM
89 MM	57 MM

CD-603-6.1

NOTE: ALL DIMENSIONS SHOWN ON THIS SHEET ARE IN MILLIMETERS UNLESS OTHERWISE NOTED.

CAST IRON EXTENSION FRAMES FOR EXISTING INLETS

N.T.S.

CD-603-6

NEW JERSEY DEPARTMENT OF TRANSPORTATION

CONSTRUCTION DETAILS

BDC02D-01 - CD-603-6.1
BDC01D-4 - ORIGINAL SHEET

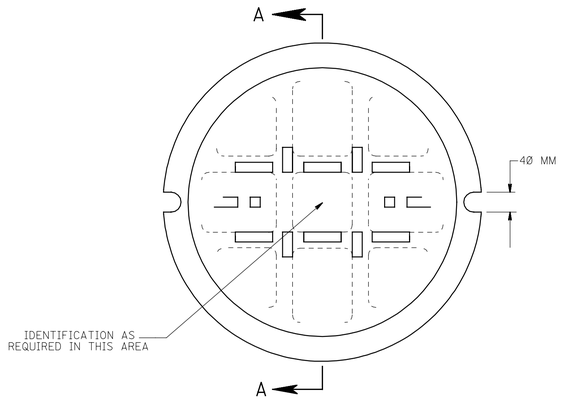

HEAVY DUTY COVER

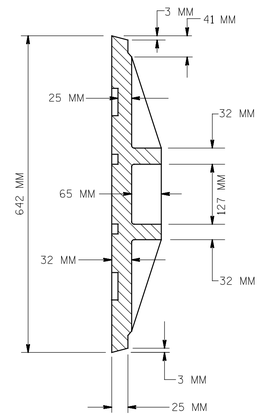

SECTION A-A

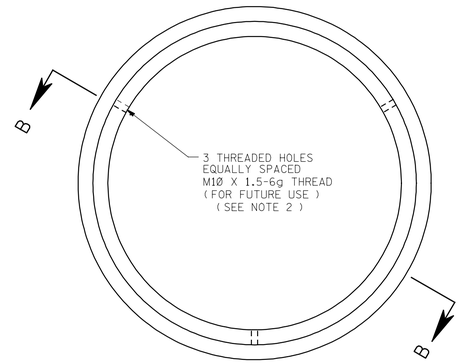

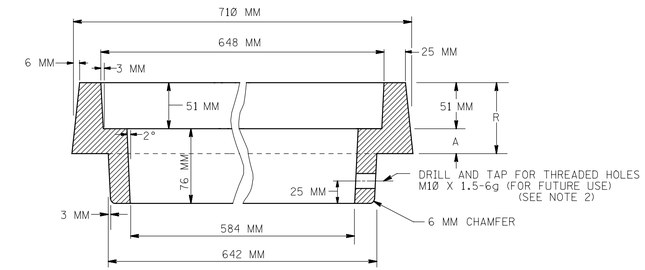

SECTION B-B

RISE R R=A+51MM	A
64 MM	13 MM
76 MM	25 MM
89 MM	38 MM

EXTENSION RING FOR STANDARD COVER

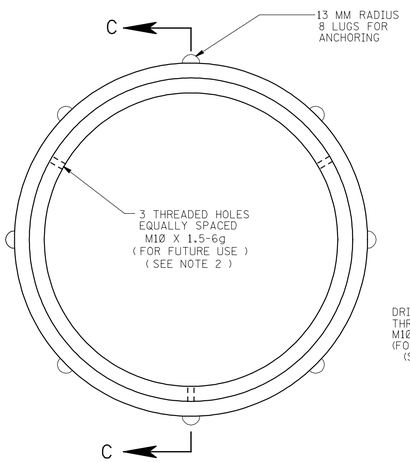

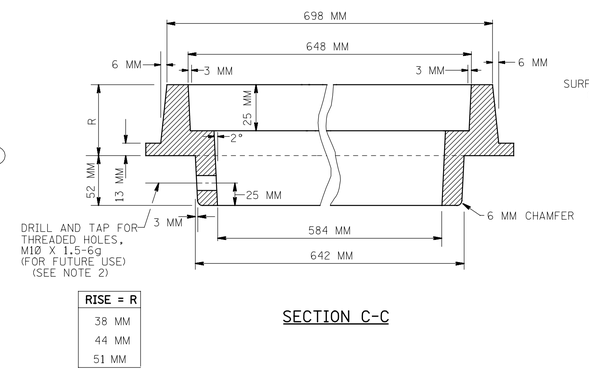

RISE = R
38 MM
44 MM
51 MM

SECTION C-C

EXTENSION RING FOR HEAVY DUTY COVER

(SEE NOTE 3)

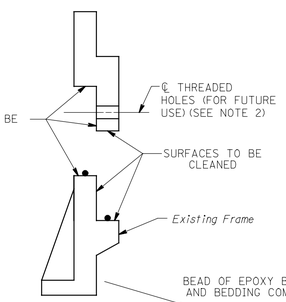

INSERT (TYPICAL)

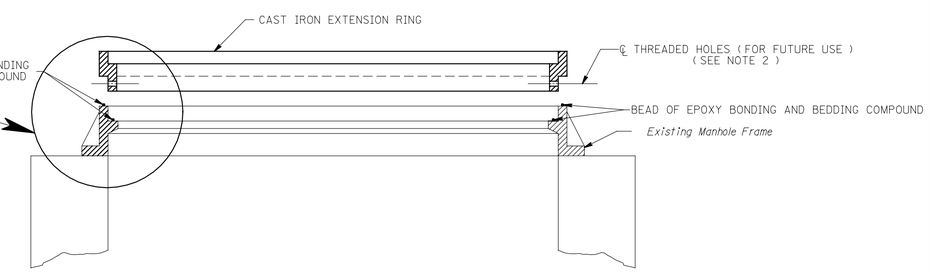

METHOD OF ATTACHING EXTENSION RINGS

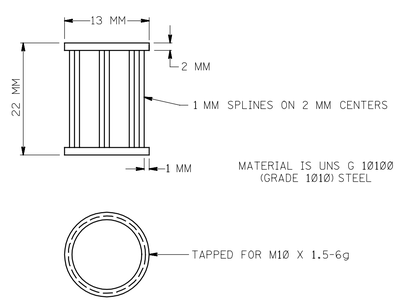

THREADED INSERT FOR EXTENTION RINGS AND FRAMES ALTERNATE

NOTES:

1. THE CONTRACTOR SHALL MEASURE THE EXISTING MANHOLE FRAMES AND COVERS TO DETERMINE PROPER DIMENSIONS OF PROPOSED EXTENSION RINGS BEFORE PLACING ORDER.
2. A THREADED INSERT MAY BE USED AS AN ALTERNATE TO DRILLING AND TAPPING.
3. A RISE OF 38 MM TO 57 MM INCLUSIVE A HEAVY DUTY COVER SHALL BE USED.
4. SEE GENERAL NOTE 10, CD-603-1.6

CD-603-7.1

NOTE: ALL DIMENSIONS SHOWN ON THIS SHEET ARE IN MILLIMETERS UNLESS OTHERWISE NOTED.

CAST IRON EXTENSION RINGS FOR EXISTING MANHOLES

N.T.S.

CD-603-7

NEW JERSEY DEPARTMENT OF TRANSPORTATION

CONSTRUCTION DETAILS

BDC021-01 - CD-603-7.1
BDC010-4 - ORIGINAL SHEET

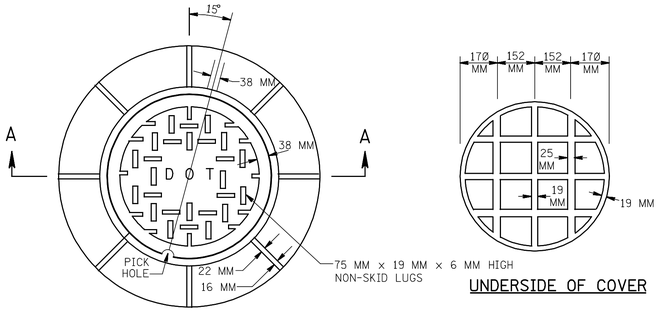

UNDERSIDE OF COVER

MINIMUM WEIGHTS

WEIGHT OF FRAME = 120 KG
WEIGHT OF COVER = 79 KG

NOTE:
SEE GENERAL NOTE 10, CD-603-1.6

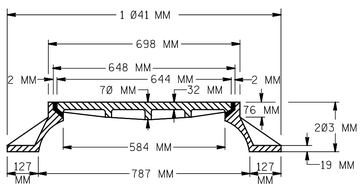

SECTION A-A

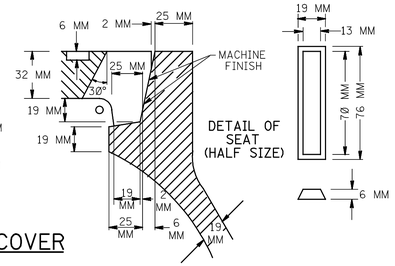

STANDARD MANHOLE FRAME AND COVER

CD-603-8.1

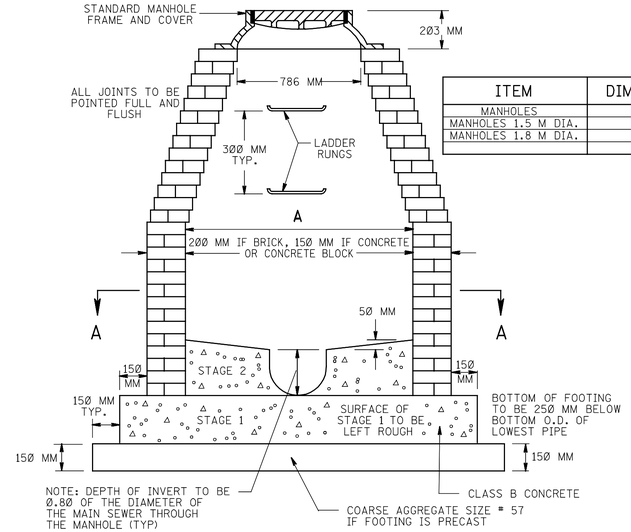

ITEM	DIMENSION A
MANHOLES	1.2 M
MANHOLES 1.5 M DIA.	1.5 M
MANHOLES 1.8 M DIA.	1.8 M

MANHOLES, MANHOLES 1.5 M DIAMETER, MANHOLES 1.8 M DIAMETER

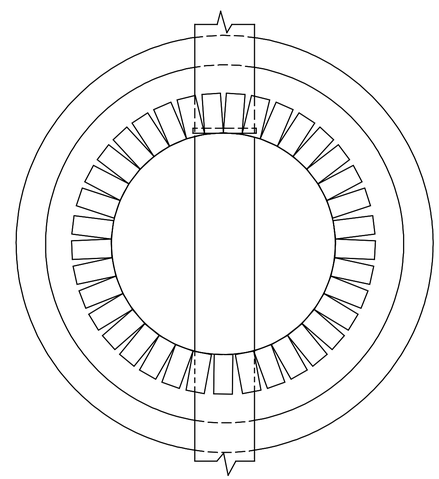

SECTION A-A

CD-603-8.2

GENERAL NOTES

1. MANHOLES MAY BE CONSTRUCTED OF BRICK, CONCRETE, CONCRETE BLOCK OR PRECAST CONCRETE.

2. WHEN THE DEPTH OF A MANHOLE EXCEEDS 3.0 METERS. AS MEASURED FROM TOP OF COVER TO INVERT, WALLS OF BRICK, CONCRETE OR CONCRETE BLOCK BELOW A DEPTH OF 2.4 METERS SHALL BE 300 MM THICK. THE OVERALL HORIZONTAL DIMENSIONS SHALL BE INCREASED 300 MM AND THE DEPTH OF THE FOUNDATION INCREASED TO 300 MM WHEN ROCK IS ENCOUNTERED THE HORIZONTAL DIMENSION AND DEPTH OF THE FOUNDATION SHALL NOT BE INCREASED. THE THICKNESS OF PRECAST CONCRETE MANHOLE WALLS DOES NOT HAVE TO BE INCREASED IF THE DEPTH OF THE MANHOLE EXCEEDS 3.0 METERS.

3. CASTINGS OF PRECAST MANHOLES SHALL BE ADJUSTED TO GRADE WITH COURSES OF BRICK OR CONCRETE BLOCK, AS REQUIRED, 300 MM MAXIMUM.

4. AS AN ALTERNATE TO THE STANDARD MANHOLE FRAME AND COVER A 990 MM DIAMETER FRAME WITH 100 MM FLANGE MAY BE FURNISHED WITH ALL OTHER DIMENSIONS AND WEIGHTS REMAINING THE SAME.

5. IN BRICK, CONCRETE OR CONCRETE BLOCK MANHOLES, INVERTS SHALL BE CONSTRUCTED IN TWO STAGES.

6. AS AN ALTERNATE, COPOLYMER POLYPROPYLENE PLASTIC LADDER RUNGS MAY BE FURNISHED IN PRECAST MANHOLES AND INLETS.

7. STANDARD MANHOLE FRAME AND COVER SHOWN IN CD-603-8-1 SHALL BE DESIGNED FOR THE TRUCK LIVE LOAD (HS-25 TRUCK WHEEL LOAD) AS ADOPTED FOR NJDOT BRIDGES. IF THE AASHTO LRFD BRIDGE DESIGN SPECIFICATIONS ARE USED THEN THE DESIGN SHALL CONFORM TO THE AASHTO LRFD HL-93 VEHICULAR LIVE LOADING OR THE NJDOT PERMIT VEHICLE, WHICHEVER GOVERNS.

CD-603-8.3

NOTE: ALL DIMENSIONS SHOWN ON THIS SHEET ARE IN MILLIMETERS UNLESS OTHERWISE NOTED.

MANHOLES

N.T.S.

CD-603-8

NEW JERSEY DEPARTMENT OF TRANSPORTATION

CONSTRUCTION DETAILS

BDC02D-01 - CD-603-8.1 & CD-603-8.2
BDC01D-4 - ORIGINAL SHEET

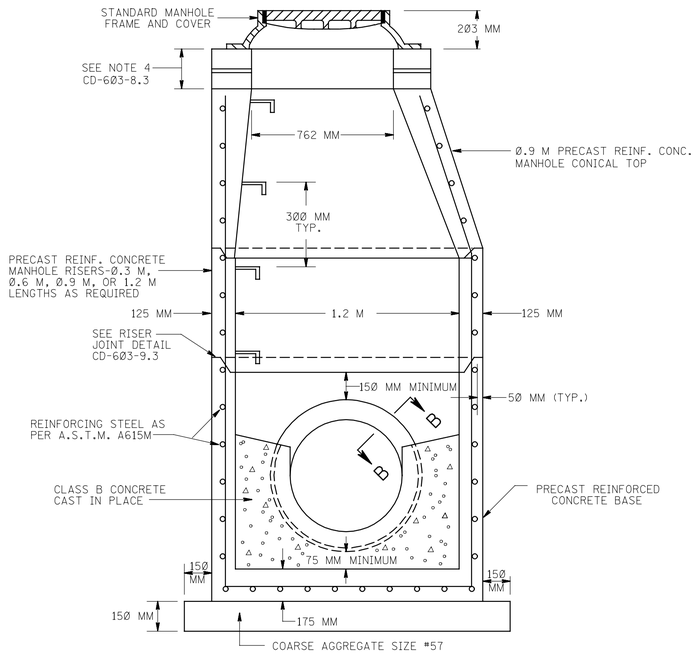

MANHOLES
PRECAST CONCRETE

PRECAST REINFORCED CONCRETE MANHOLE SECTIONS SHALL CONFORM TO AASHTO M 199M.

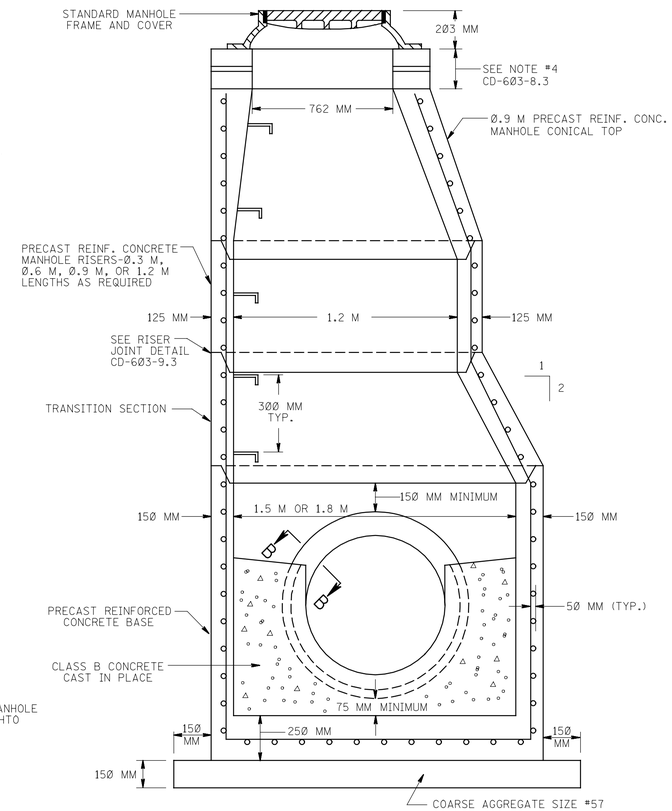

MANHOLES 1.5 M DIAMETER, MANHOLES 1.8 M DIAMETER
PRECAST CONCRETE

CD-603-9.1

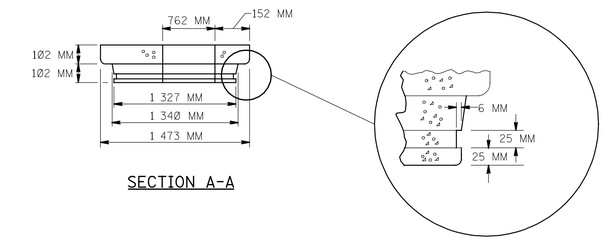

SECTION A-A

DETAIL OF GROOVE FOR "O" RING RUBBER GASKET

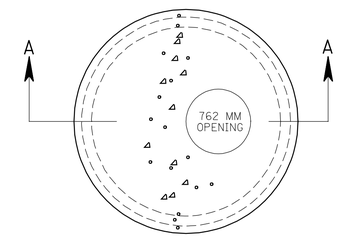

PLAN

1.2 M PRECAST REINFORCED CONCRETE MANHOLE FLAT TOP

USE IN LIEU OF CONICAL SECTION WHEN HEIGHT OF MANHOLE IS LESS THAN 1.2 M.

CD-603-9.2

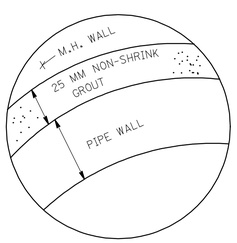

SECTION B-B

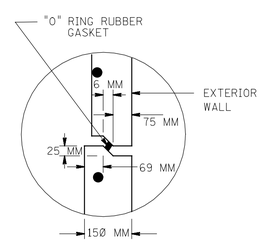

PRECAST MANHOLE
RISER JOINT DETAIL

CD-603-9.3

NOTE: ALL DIMENSIONS SHOWN ON THIS SHEET ARE IN MILLIMETERS UNLESS OTHERWISE NOTED.

PRECAST MANHOLES

N.T.S.

CD-603-9

NEW JERSEY DEPARTMENT OF TRANSPORTATION

CONSTRUCTION DETAILS

BDC020-01 - CD-603-9.1
BDC010-4 - ORIGINAL SHEET

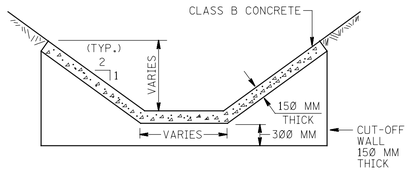

CONCRETE SLOPE GUTTERS, 150 MM THICK

NOTE;

CONCRETE CUT-OFF WALLS SHALL BE CONSTRUCTED AT THE BEGINNING & END OF EACH RUN OF GUTTER, EXCEPT WHERE THE GUTTER CONNECTS WITH A HEADWALL OR EXISTING GUTTER. THE COST OF CUT-OFF WALLS SHALL BE INCLUDED IN THE UNIT PRICE BID FOR CONCRETE SLOPE GUTTER, 150 MM THICK.

EXPANSION JOINTS SHALL BE 13 MM THICK AND SHALL BE SPACED AT INTERVALS OF 6 METERS. THE JOINTS SHALL BE FILLED WITH PREFORMED EXPANSION JOINT FILLER.

CD-604-1.1

BDC01D-4 - ORIGINAL SHEET

NOTE: ALL DIMENSIONS SHOWN ON THIS SHEET ARE IN MILLIMETERS UNLESS OTHERWISE NOTED.

CONCRETE SLOPE GUTTERS

N.T.S.

CD-604-1

NEW JERSEY DEPARTMENT OF TRANSPORTATION

CONSTRUCTION DETAILS

GENERAL NOTES APPLYING TO ALL TYPES OF DOWELLED CURBS

TRANSVERSE JOINTS SHALL BE INSTALLED IN THE CURBS AT AND DIRECTLY OVER TRANSVERSE JOINTS IN THE PAVEMENT. DEFINITE CRACKS THRU THE PAVEMENT SHALL ALSO BE TREATED AS JOINTS. ADDITIONAL JOINTS SHALL ALSO BE CONSTRUCTED IN THE CURB SO SPACED AS TO MAKE EQUAL SECTIONS NOT OVER 4.5 METERS IN LENGTH.

THE TRANSVERSE JOINTS SHALL BE CONSTRUCTED AS SPECIFIED FOR THE CURB, EXCEPT THAT THE THICKNESS OF THE JOINT FILLER IN THE CURB SHALL BE AS FOLLOWS:

- 13MM FOR INTERMEDIATE JOINTS AND JOINTS OVER DEFINITE CRACKS.
- 13MM OVER PAVEMENT JOINTS WHERE SLAB LENGTH IS 15 METERS OR LESS.
- 25MM OVER PAVEMENT JOINTS WHERE SLAB LENGTH IS MORE THAN 15 METERS. VARIABLE IN MULTIPLES OF 13MM BUT NOT LESS THAN THE EXISTING WIDTH OF THE TRANSVERSE JOINTS IN BRIDGES AND THE JOINTS BETWEEN THE APPROACH SLABS AND BRIDGES.

FOR THICKNESS OF 25MM OR MORE, LAYERS OF 13MM MATERIAL MAY BE GLUED OR OTHERWISE FASTENED TOGETHER BY A MEANS SATISFACTORY TO THE ENGINEER. WHERE THE REQUIRED JOINT OPENING EXCEEDS 25MM, THE CONTRACTOR MAY CONSTRUCT OPEN JOINTS, IF DESIRED.

WHERE THE CURB IS TO BE CONSTRUCTED ON EXISTING CONCRETE PAVEMENT SURFACE OR CONCRETE BASE COURSE, THE SURFACE OF THE CONCRETE PAVEMENT OR CONCRETE BASE SHALL BE CLEANED IN ACCORDANCE WITH STANDARD SPECIFICATIONS PRIOR TO CONSTRUCTION OF THE CURB THEREON.

WHERE DOWELLED CURB IS TO BE CONSTRUCTED ACROSS A LONGITUDINAL JOINT IN EXISTING PAVEMENT, THE DOWELS IN THE SHORTER PORTION OF THE CURB PANEL SHALL BE OMITTED AND THE CURB IN THIS PORTION OF THE PANEL SHALL BE CONSTRUCTED WITH 45# SMOOTH ROLL ROFING BETWEEN IT AND THE EXISTING PAVEMENT.

CD–605–1.1

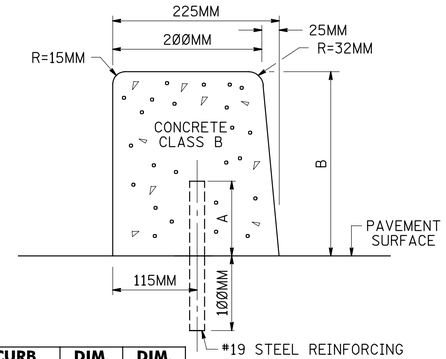

CURB SIZE	DIM. A	DIM. B
225MM BY 100MM	50MM	100MM
225MM BY 150MM	100MM	150MM

#19 STEEL REINFORCING BARS 150MM OR 200MM LONG. DOWELS TO BE SET IN GROUT IN DRILLED HOLES, SPACED 1.2M C. TO C. LONGITUDINALLY.

225MM x __ CONCRETE / WHITE CONCRETE VERTICAL CURB, DOWELLED

CD–605–1.2

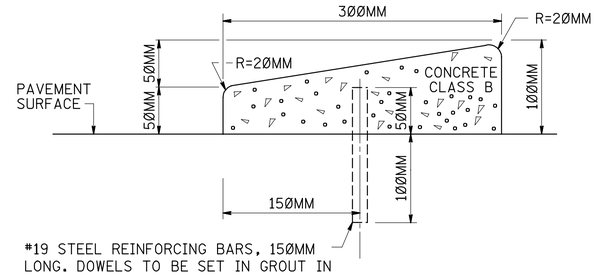

#19 STEEL REINFORCING BARS, 150MM LONG. DOWELS TO BE SET IN GROUT IN DRILLED HOLES, SPACED 1.2M C. TO C. LONGITUDINALLY.

300MM x 75MM CONCRETE / WHITE CONCRETE SLOPING CURB, DOWELLED

CD–605–1.3

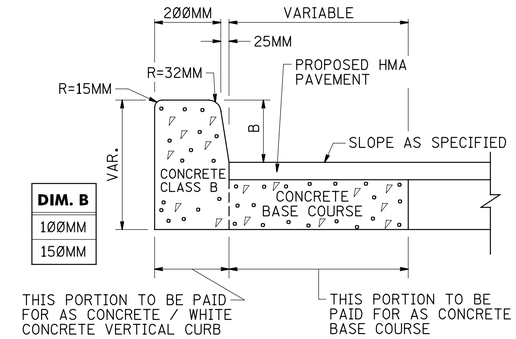

DIM. B
100MM
150MM

NOTES:

EXPANSION JOINTS 13MM WIDE IN THE CURB, AND EXPANSION JOINTS TYPE A IN THE MONOLITHIC PAVEMENT STRIP SHALL BE DIRECTLY OPPOSITE EVERY TRANSVERSE JOINT IN THE CENTRAL PAVEMENT STRIPS.

JOINT MATERIAL IN THE CURB SHALL BE AS SPECIFIED FOR CONCRETE / WHITE CONCRETE VERTICAL CURB. THE TRANSVERSE EXPANSION JOINT MATERIAL SHALL NOT EXTEND THRU THE CURB.

CONCRETE / WHITE CONCRETE VERTICAL CURB MONOLITHIC WITH CONCRETE BASE COURSE

CD–605–1.4

NOTES:

13MM PREFORMED EXPANSION JOINT FILLER, BITUMINOUS TYPE, TO BE INSTALLED BETWEEN THE CURB AND CONCRETE PAVEMENT OR CONCRETE BASE COURSE.

TRANSVERSE JOINTS 13MM WIDE SHALL BE INSTALLED IN THE CURB 6 METERS APART AND SHALL BE FILLED WITH PREFORMED BITUMINOUS-IMPREGNATED FIBER JOINT FILLER RECESSED 5MM IN FROM FRONT FACE AND TOP OF CURB.

EXPANSION JOINTS THRU AND ADJACENT TO THE CURB SHALL BE INCLUDED IN THE UNIT PRICE BID FOR CURB.

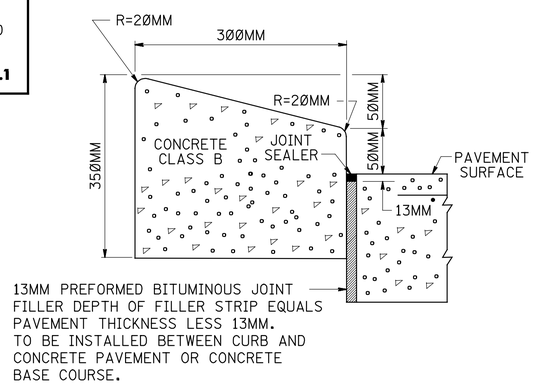

300MM x 325MM CONCRETE / WHITE CONCRETE SLOPING CURB

CD–605–1.5

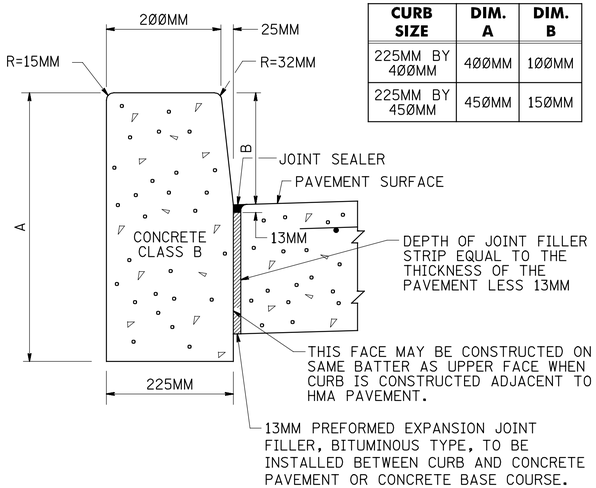

CURB SIZE	DIM. A	DIM. B
225MM BY 400MM	400MM	100MM
225MM BY 450MM	450MM	150MM

NOTES:

TRANSVERSE JOINTS 13MM WIDE SHALL BE INSTALLED IN THE CURB 6 METERS APART AND SHALL BE FILLED WITH PREFORMED BITUMINOUS-IMPREGNATED FIBER JOINT FILLER RECESSED 5MM IN FROM FRONT FACE AND TOP OF CURB.

EXPANSION JOINTS THRU AND ADJACENT TO THE CURB SHALL BE INCLUDED IN THE UNIT PRICE BID FOR CURB.

CONCRETE / WHITE CONCRETE VERTICAL CURB

CD–605–1.6

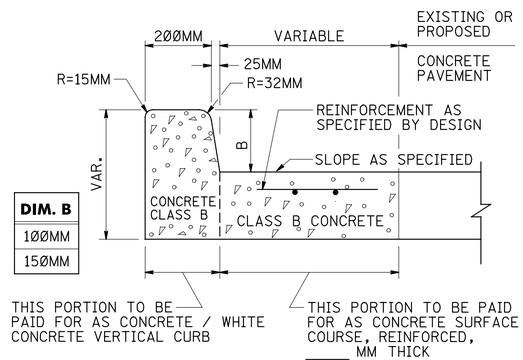

DIM. B
100MM
150MM

NOTES:

EXPANSION JOINTS 13MM WIDE IN THE CURB, AND EXPANSION JOINTS TYPE A IN THE MONOLITHIC PAVEMENT STRIP SHALL BE DIRECTLY OPPOSITE EVERY TRANSVERSE JOINT IN THE CENTRAL PAVEMENT STRIPS.

JOINT MATERIAL IN THE CURB SHALL BE AS SPECIFIED FOR CONCRETE / WHITE CONCRETE VERTICAL CURB. THE TRANSVERSE EXPANSION JOINT MATERIAL SHALL NOT EXTEND THRU THE CURB.

CONCRETE / WHITE CONCRETE VERTICAL CURB MONOLITHIC WITH CONCRETE PAVEMENT

CD–605–1.7

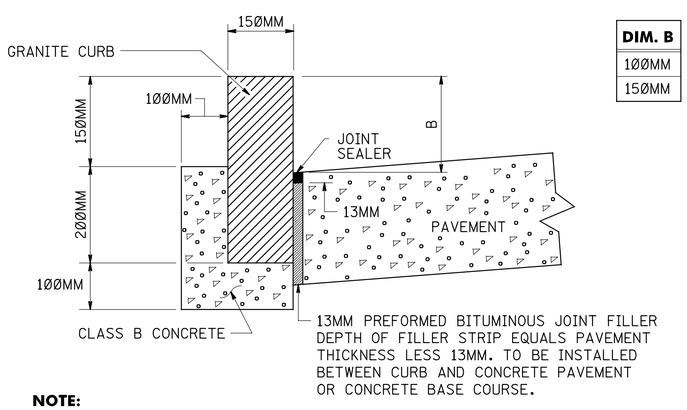

DIM. B
100MM
150MM

NOTE:

FOUNDATION TO BE INSTALLED THE ENTIRE LENGTH OF THE GRANITE CURB.

NEW OR RESET GRANITE CURB

CD–605–1.8

ATTACHMENT TABLE		
CD NO.	ATTACH. TYPE	WIDTH
612-13	B	283MM
612-15	A	178MM
612-15	B	283MM
612-16	A	178MM
612-16	B	283MM

NOTE:

PAYMENT FOR LIP CURB WILL BE MADE UNDER 225MM x __ MM CONCRETE / WHITE CONCRETE VERTICAL CURB.

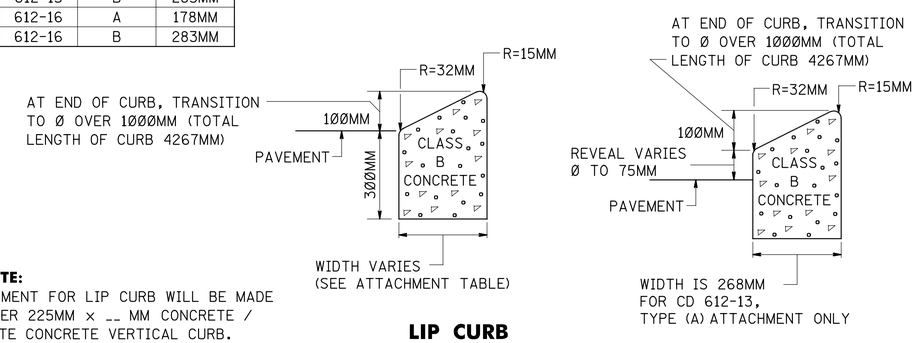

LIP CURB

CD–605–1.9

CONCRETE AND GRANITE CURB

N.T.S.

HMA = HOT MIX ASPHALT

CD–605–1

NEW JERSEY DEPARTMENT OF TRANSPORTATION

CONSTRUCTION DETAILS

BDC020-01 - CD-605-1.8
BDC010-4 - ORIGINAL SHEET

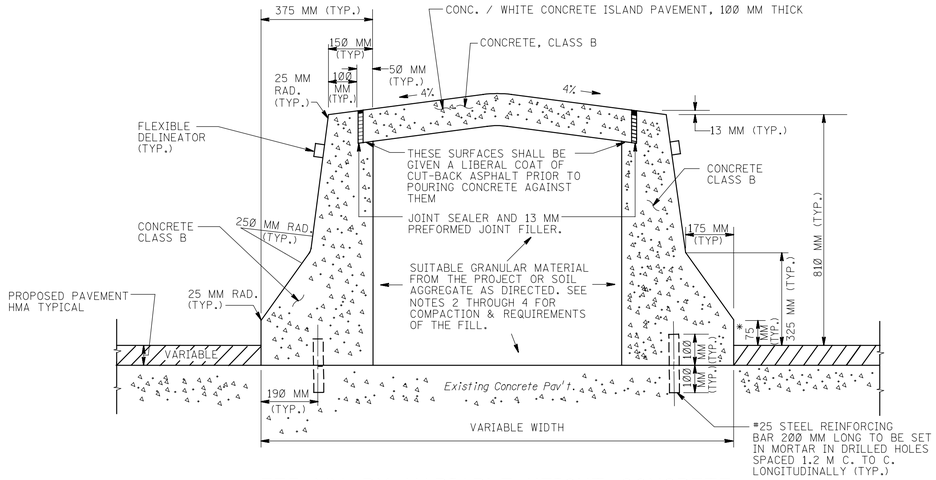

375 MM BY VARIABLE HEIGHT CONCRETE / WHITE CONCRETE BARRIER CURB, DOWELLED

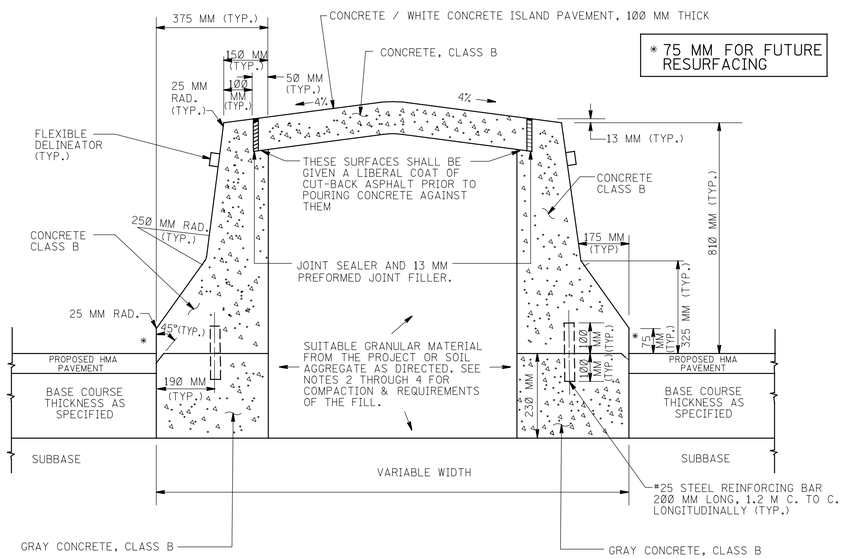

375 BY 1 040 MM CONCRETE / WHITE CONCRETE BARRIER CURB

NOTES:

1. SEE GENERAL NOTES APPLYING TO ALL BARRIER CURB CD-605-3.2.
2. COMPACTION SHALL BE IN ACCORDANCE WITH THE DENSITY CONTROL METHOD OF THE NJDOT STANDARD SPECIFICATIONS AND ITS SUPPLEMENTS.
3. THE FILL BETWEEN THE CURBS SHALL BE SHAPED AND COMPACTED TO A FIRM EVEN SURFACE. UNSTABLE MATERIAL SHALL BE REMOVED AND REPLACED WITH ACCEPTABLE MATERIAL WHICH SHALL BE COMPACTED.
4. SOIL LIFTS SHALL BE LIMITED TO 300 MILLIMETERS AND EACH LIFT SHALL BE COMPACTED.
5. THE ITEM FLEXIBLE DELINEATORS, BARRIER CURB MOUNTED SHALL BE INSTALLED ON ALL BARRIER CURB IN ACCORANCE WITH SECTION 620 OF THE N.J.D.O.T. SPECIFICATIONS.

CD-605-2.1

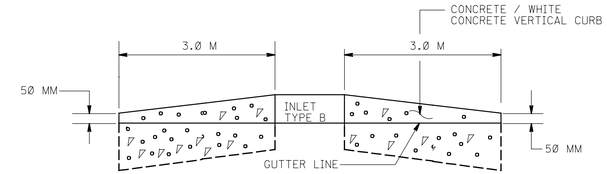

CURB TREATMENT AT BERM SECTION AND ALL CURB ENDS

CD-605-2.2

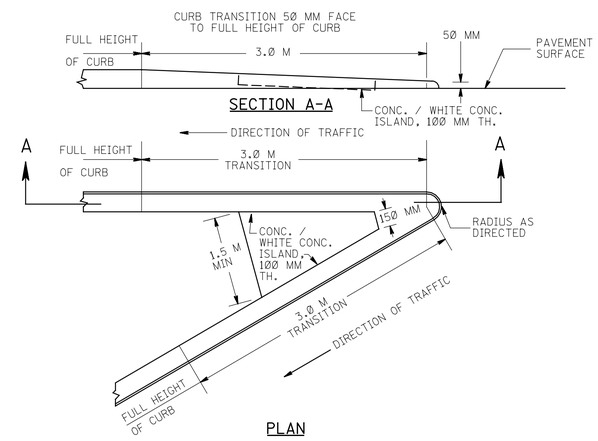

CURB TRANSITION

CD-605-2.3

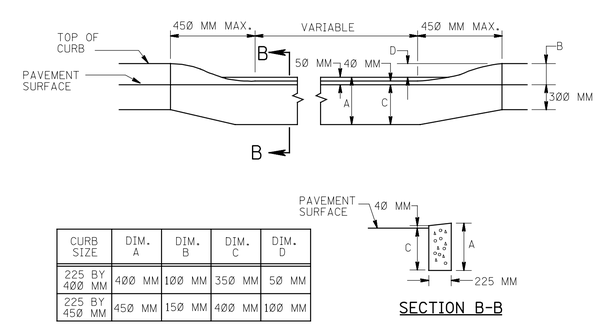

CURB SIZE	DIM. A	DIM. B	DIM. C	DIM. D
225 BY 400 MM	400 MM	100 MM	350 MM	50 MM
225 BY 450 MM	450 MM	150 MM	400 MM	100 MM

METHOD OF DEPRESSING CURB AT DRIVEWAYS

CD-605-2.4

BARRIER CURB AND VERTICAL CURB DETAILS

N. T. S.

HMA = HOT MIX ASPHALT

CD-605-2

NEW JERSEY DEPARTMENT OF TRANSPORTATION

CONSTRUCTION DETAILS

NOTE: ALL DIMENSIONS SHOWN ON THIS SHEET ARE IN MILLIMETERS UNLESS OTHERWISE NOTED.

BDC001-4 - ORIGINAL SHEET

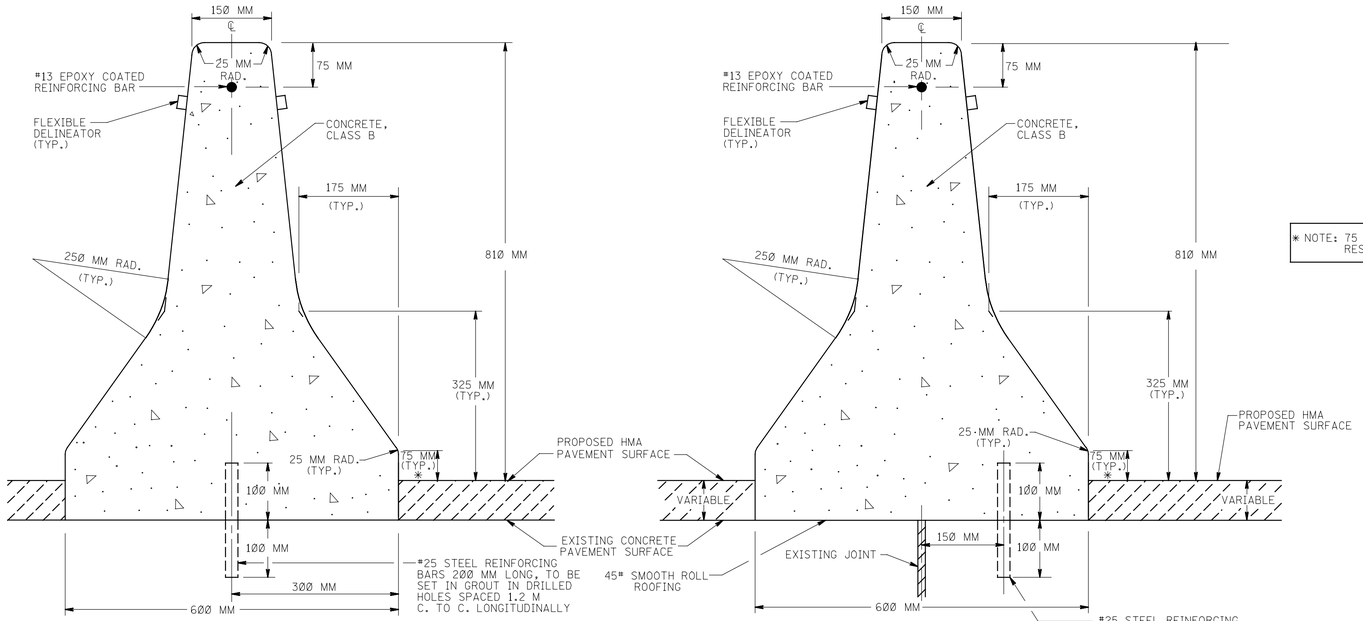

* NOTE: 75 MM FOR FUTURE RESURFACING

600 BY ___ MM CONCRETE / WHITE CONCRETE BARRIER CURB, DOWELLED

CD-605-3.1

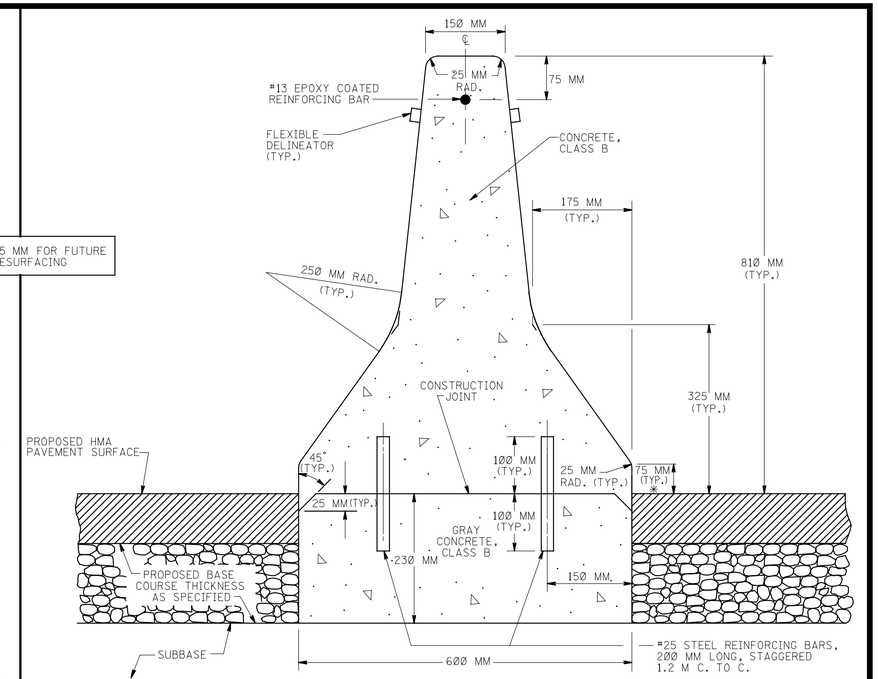

600 BY 1 040 MM CONCRETE / WHITE CONCRETE BARRIER CURB

CD-605-3.4

NOTES

(A) WHERE BARRIER CURB, DOWELLED, IS TO BE CONSTRUCTED ON EXISTING CONCRETE PAVEMENT OR EXISTING CONCRETE BASE COURSE

TRANSVERSE JOINTS SHALL BE INSTALLED IN THE CURBS AT AND DIRECTLY OVER TRANSVERSE JOINTS IN THE PAVEMENT. DEFINITE CRACKS THROUGH THE PAVEMENT SHALL ALSO BE TREATED AS JOINTS. ADDITIONAL JOINTS SHALL ALSO BE CONSTRUCTED IN THE CURB SO SPACED AS TO MAKE EQUAL SECTIONS NOT OVER 4.5 METERS IN LENGTH.

THE TRANSVERSE JOINTS SHALL BE FILLED WITH PREFORMED BITUMINOUS-IMPREGNATED FIBER JOINT FILLER, COMPLYING WITH THE REQUIREMENTS OF AASHTO M-213 SPECIFICATION, RECESSED 5 MM IN FROM FACES AND TOP OF CURB. THE COST OF THE TRANSVERSE EXPANSION JOINTS IN THE CURB SHALL BE INCLUDED IN THE UNIT PRICE BID FOR THE BARRIER CURB. THE THICKNESS OF THE TRANSVERSE EXPANSION JOINT FILLER SHALL BE AS FOLLOWS:

13 MM FOR IMMEDIATE JOINTS AND JOINTS OVER DEFINITE CRACKS.

13 MM OVER PAVEMENT JOINTS WHERE SLAB LENGTH IS 15 METERS OR LESS.

25 MM OVER PAVEMENT JOINTS WHERE SLAB LENGTH IS MORE THAN 15 METERS.

VARIABLE IN MULTIPLES OF 13 MM BUT NOT LESS THAN THE EXISTING WIDTH OF THE TRANSVERSE JOINTS IN BRIDGES AND JOINTS BETWEEN THE APPROACH SLABS AND BRIDGES.

FOR THICKNESSES OF 25 MM OR MORE, LAYERS OF 13 MM MATERIAL MAY BE GLUED OR OTHERWISE FASTENED TOGETHER BY A MEANS SATISFACTORY TO THE ENGINEER. WHERE THE REQUIRED JOINT OPENING EXCEEDS 25 MM, THE CONTRACTOR MAY CONSTRUCT OPEN JOINTS.

THE SURFACE OF THE EXISTING CONCRETE PAVEMENT OR CONCRETE BASE COURSE SHALL BE CLEANED IN ACCORDANCE WITH THE NJDOT STANDARD SPECIFICATIONS AND ITS SUPPLEMENTS PRIOR TO THE CONSTRUCTION OF THE CURB THEREON.

WHERE DOWELLED CURB IS TO BE CONSTRUCTED ACROSS A LONGITUDINAL JOINT IN THE EXISTING CONCRETE OR BASE COURSE, THE DOWELS IN THE SHORTER PORTION OF THE CURB PANEL SHALL BE OMITTED AND THE CURB IN THIS PORTION OF THE PANEL SHALL BE CONSTRUCTED WITH 45° SMOOTH ROLL ROOFING BETWEEN IT AND THE EXISTING PAVEMENT.

(B) WHERE BARRIER CURB IS TO BE CONSTRUCTED ON PROPOSED CONCRETE BASE,

TRANSVERSE JOINTS 13 MM WIDE SHALL BE INSTALLED IN THE BASE 6 METERS APART AND IN THE BARRIER CURB DIRECTLY OVER JOINTS IN THE BASE. THE JOINTS SHALL BE FILLED WITH PREFORMED BITUMINOUS-IMPREGNATED FIBER JOINT FILLER, COMPLYING WITH THE REQUIREMENTS OF AASHTO M-213 SPECIFICATION, RECESSED 5 MM IN FROM FACES AND TOP OF CURB. THE COST OF THE TRANSVERSE EXPANSION JOINTS IN THE BASE AND IN THE CURB SHALL BE INCLUDED IN THE UNIT PRICE FOR THE BARRIER CURB.

(C) GENERAL

THE FINISHED SURFACE OF THE BARRIER CURB SHALL BE SMOOTH, DENSE, UNPITTED AND FREE FROM AIR BUBBLE POCKETS, DEPRESSIONS AND HONEYCOMBS. IF THE ENGINEER DEEMS IT NECESSARY, THE CURB SHALL BE GIVEN A WOOD FLOAT FINISH RUBBED WITH A MIXTURE OF CEMENT, SAND AND WATER TO OBTAIN THE ABOVE-MENTIONED FINISHED SURFACE.

(D) DELINEATORS

THE ITEM FLEXIBLE DELINEATORS, BARRIER CURB MOUNTED SHALL BE INSTALLED ON ALL BARRIER CURB IN ACCORDANCE WITH SECTION 620 OF THE N.J.D.O.T. SPECIFICATIONS.

CD-605-3.2

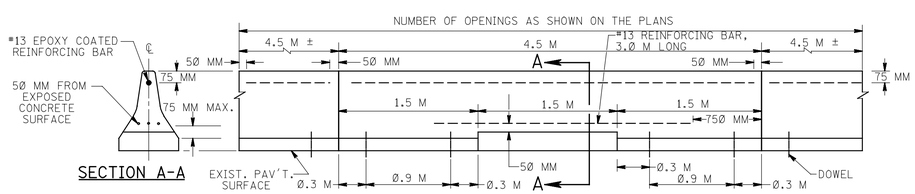

DETAIL OF OPENINGS TO BE CONSTRUCTED IN BARRIER CURB

CD-605-3.3

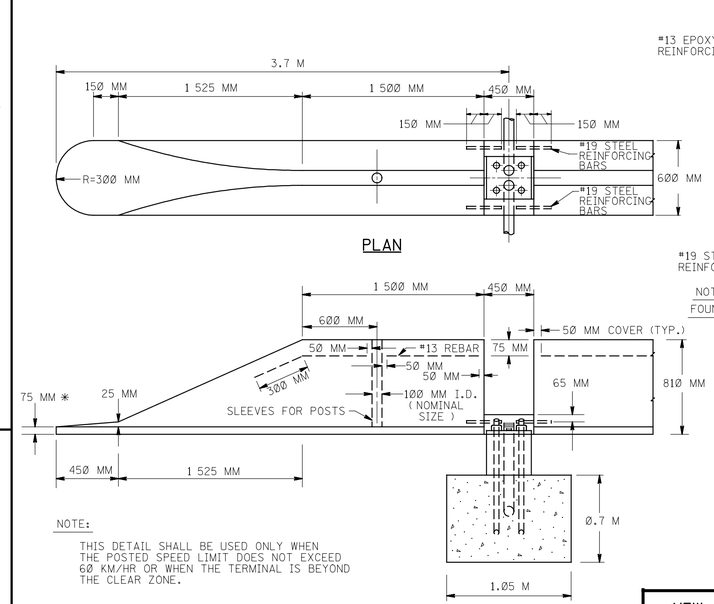

NOTE:

THIS DETAIL SHALL BE USED ONLY WHEN THE POSTED SPEED LIMIT DOES NOT EXCEED 60 KM/HR OR WHEN THE TERMINAL IS BEYOND THE CLEAR ZONE.

BARRIER CURB AT LIGHTING POLE BASE INSTALLATION

CD-605-3.5

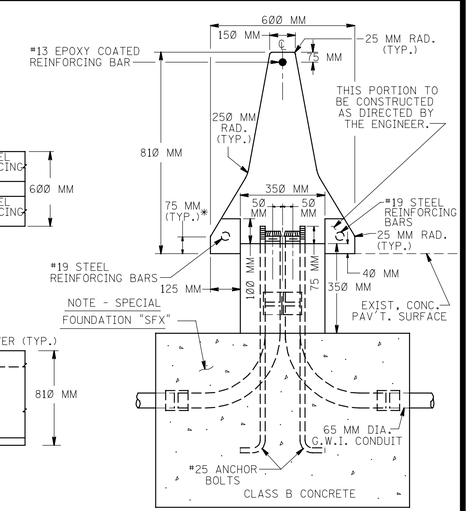

END VIEW

BARRIER CURB

N.T.S.

HMA=HOT MIX ASPHALT

CD-605-3

NEW JERSEY DEPARTMENT OF TRANSPORTATION

CONSTRUCTION DETAILS

NOTE: ALL DIMENSIONS SHOWN ON THIS SHEET ARE IN MILLIMETERS UNLESS OTHERWISE NOTED.

BDC2021-01 - CD-605-3.5
BDC2011-4 - ORIGINAL SHEET

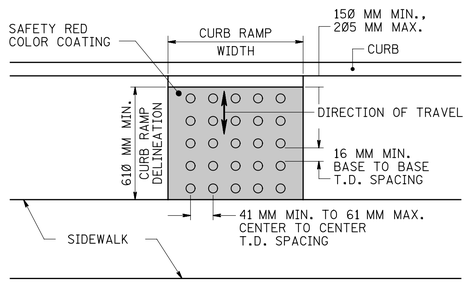

PLAN VIEW

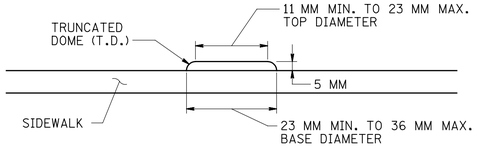

ELEVATION

DETECTABLE WARNING SURFACE

CD-607-1.1

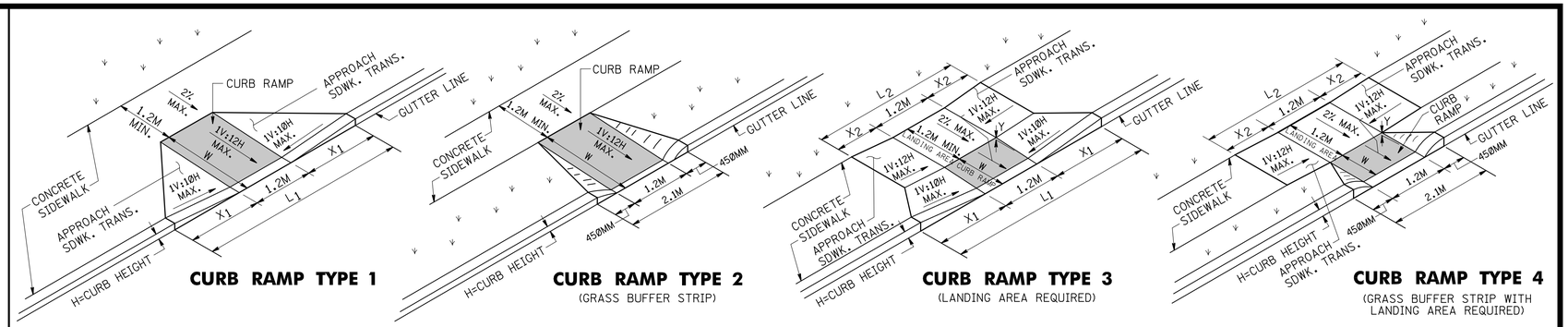

CURB RAMP TYPE 1

CURB RAMP TYPE 2
(GRASS BUFFER STRIP)

CURB RAMP TYPE 3
(LANDING AREA REQUIRED)

CURB RAMP TYPE 4
(GRASS BUFFER STRIP WITH LANDING AREA REQUIRED)

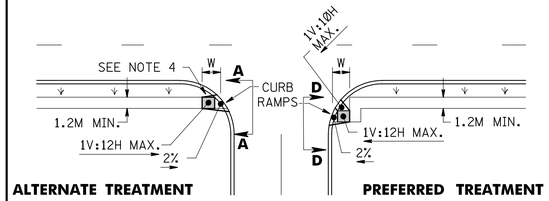

ALTERNATE TREATMENT
(SEE NOTE 10)

PREFERRED TREATMENT
(SEE NOTE 10)

CURB RAMP TYPE 5
(CROSSING PARALLEL TO HIGHWAY ONLY)

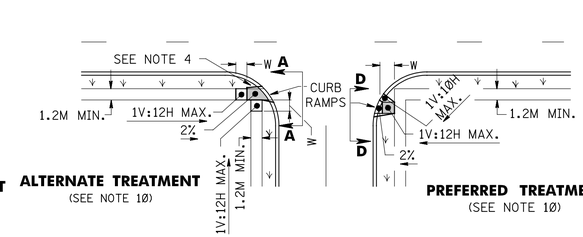

ALTERNATE TREATMENT
(SEE NOTE 10)

PREFERRED TREATMENT
(SEE NOTE 10)

CURB RAMP TYPE 6
(CROSSING PARALLEL TO HIGHWAY ONLY)

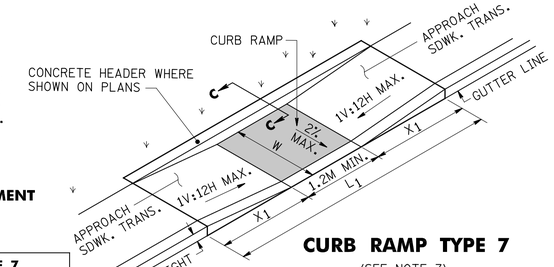

CURB RAMP TYPE 7
(SEE NOTE 7)

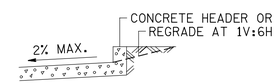

SECTION C–C

CURB RAMP TYPE 7			
W METERS	H MM	X_1 METERS	L_1 METERS
1.20 MIN. 1.80 MAX.	75	0.90	3.30
	100	1.20	3.90
	125	1.50	4.50
	150	1.80	5.10
	175	2.10	5.70
	200	2.40	6.30
	225	2.70	6.90

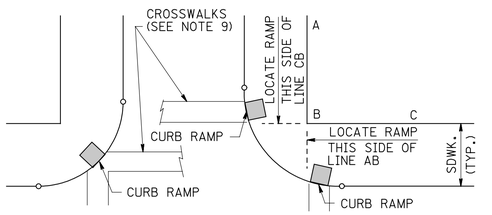

ALTERNATE TREATMENT
(SEE NOTE 10)

PREFERRED TREATMENT
(SEE NOTE 10)

LOCATION OF CURB RAMP TYPES 1, 2, 3, 4 & 7 FOR CROSSING PARALLEL AND PERPENDICULAR TO HIGHWAY

CURB RAMP TYPE 1			
H MM	X_1 METERS	L_1 METERS	W METERS
75	0.75	2.70	0.90
100	1.00	3.20	1.20
125	1.25	3.75	1.50
150	1.50	4.20	1.80
175	1.75	4.70	2.10
200	2.00	5.25	2.40
225	2.25	5.70	2.70

CURB RAMP TYPE 2, 5 OR 6	
H MM	W METERS
75	0.90
100	1.20
125	1.50
150	1.80
175	2.10
200	2.40
225	2.70

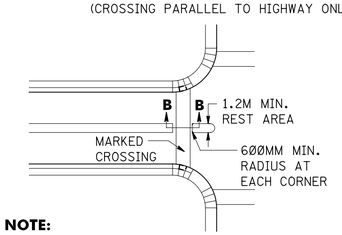

NOTE:
WHERE PRACTICAL, END LEFT TURN ISLAND OR DIVISIONAL ISLAND BEFORE CROSSWALK TO ELIMINATE CUT-THROUGH

ISLAND WALKWAY OPENING AT INTERSECTIONS

GENERAL NOTES:

1. LANDING AREA, APPROACH SIDEWALK TRANSITIONS, AND CURB RAMP SHALL BE KEPT CLEAR OF OBSTRUCTIONS.
2. DIMENSIONS SHOWN IN TABLES ARE FOR RELATIVELY FLAT SIDEWALK AREAS. CARE SHOULD BE TAKEN WHEN DETERMINING CURB RAMP SIZE BASED ON CURB HEIGHT (H) WHERE ELEVATION OF CURB AND SIDEWALK VARY DRASTICALLY IN AREA OF PROPOSED CURB RAMP.
3. CURB (DROPPED CURB) GUTTERLINE TO BE FLUSH WITH ROADWAY PAVEMENT A MINIMUM OF 1.2 METERS AT ALL CURB RAMPS.
4. FOR CURB RAMP TYPES 5 AND 6, IF A GRASS BUFFER DOES NOT EXIST, SLOPE CURB TO EQUAL SLOPE OF ADJACENT CURB RAMP.
5. SIDEWALK AND CURB RAMP WITHIN AREA ENCLOSED BY HEAVY LINES TO BE PAID FOR AS CONCRETE SIDEWALK OF THE APPROPRIATE ADJACENT THICKNESS.
6. CURB AND HEADER WITHIN AREA ENCLOSED BY HEAVY LINES TO BE PAID FOR AS VERTICAL CURB OR SLOPING CURB OF THE APPROPRIATE ADJACENT SIZE AND KIND.
7. WHERE THE DISTANCE FROM THE GUTTER LINE TO THE OUTSIDE EDGE OF SIDEWALK IS 1.8 METERS OR LESS, CURB RAMP TYPE 7 SHOULD BE USED, INSTEAD OF CURB RAMP TYPE 1 THROUGH 4.
8. THE PUBLIC SIDEWALK CURB RAMP, DETECTABLE WARNING SURFACES (SHADED AREAS) SHALL BE SAFETY RED COLOR ON CONCRETE OR 70% COLOR CONTRAST FOR OTHER SURFACE SUCH AS BRICK.
9. CROSSWALKS AND STOP LINES MAY BE MARKED OR UNMARKED, SEE PLANS.
10. PREFERRED AND ALTERNATE TREATMENTS SHOULD NOT BE INTERMIXED WITHIN THE SAME INTERSECTION.
11. DIMENSIONS SHOWN IN TABLES ARE FOR 75MM TO 225MM CURB HEIGHTS. WHERE THE CURB HEIGHTS ARE OTHER THAN WHAT IS PROVIDED IN THE TABLES, THE DIMENSIONS OF THE RAMPS WILL HAVE TO BE CALCULATED BASED ON CROSS SLOPES SHOWN.

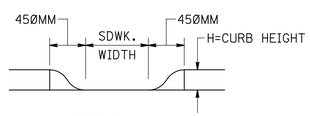

SECTION A–A

NOTE:
CURB RAMP OPENING TO BE FLUSH WITH ROADWAY PAVEMENT (CURB RAMP TYPES 5 & 6).

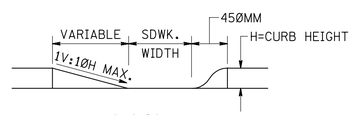

SECTION D–D

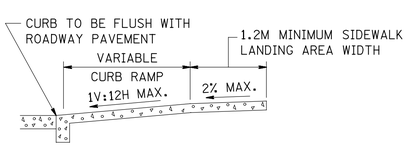

SECTION THROUGH CURB RAMPS 1 THROUGH 6

CURB RAMP TYPE 3						
W METERS	H MM	X_1 METERS	L_1 METERS	Y MM	X_2 METERS	L_2 METERS
0.75	75	0.75	2.70	62.5	0.15	1.50
	100	1.00	3.20	62.5	0.45	2.10
	125	1.25	3.75	62.5	0.75	2.70
	150	1.50	4.20	62.5	1.05	3.30
	175	1.75	4.70	62.5	1.35	3.90
	200	2.00	5.25	62.5	1.65	4.50
	225	2.25	5.70	62.5	1.95	5.10
0.90	75	*	*	*	*	*
	100	1.00	3.20	75	0.30	1.80
	125	1.25	3.75	75	0.60	2.40
	150	1.50	4.20	75	0.90	3.00
	175	1.75	4.70	75	1.20	3.60
	200	2.00	5.25	75	1.50	4.20
	225	2.25	5.70	75	1.80	4.80
1.05	75	*	*	*	*	*
	100	1.00	3.20	90	0.15	1.50
	125	1.25	3.75	90	0.45	2.10
	150	1.50	4.20	90	0.75	2.70
	175	1.75	4.70	90	1.05	3.30
	200	2.00	5.25	90	1.35	3.90
	225	2.25	5.70	90	1.65	4.50
1.20	75	*	*	*	*	*
	100	*	*	*	*	*
	125	1.25	3.75	100	0.30	1.80
	150	1.50	4.20	100	0.60	2.40
	175	1.75	4.70	100	0.90	3.00
	200	2.00	5.25	100	1.20	3.60
	225	2.25	5.70	100	1.50	4.20

CURB RAMP TYPE 4				
W METERS	H MM	Y MM	X_2 METERS	L_2 METERS
0.75	75	62.5	0.15	1.50
	100	62.5	0.45	2.10
	125	62.5	0.75	2.70
	150	62.5	1.05	3.30
	175	62.5	1.35	3.90
	200	62.5	1.65	4.50
	225	62.5	1.95	5.10
0.90	75	**	**	**
	100	75	0.30	1.80
	125	75	0.60	2.40
	150	75	0.90	3.00
	175	75	1.20	3.60
	200	75	1.50	4.20
	225	75	1.80	4.80
1.05	75	**	**	**
	100	90	0.15	1.50
	125	90	0.45	2.10
	150	90	0.75	2.70
	175	90	1.05	3.30
	200	90	1.35	3.90
	225	90	1.65	4.50
1.20	75	**	**	**
	100	**	**	**
	125	100	0.30	1.80
	150	100	0.60	2.40
	175	100	0.90	3.00
	200	100	1.20	3.60
	225	100	1.50	4.20

* TYPE 3 RAMP IS NOT APPLICABLE, USE TYPE 1. ** TYPE 4 RAMP IS NOT APPLICABLE, USE TYPE 2.

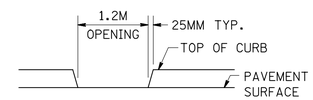

SECTION B–B

NOTE:
1.2M WIDE OPENING TO BE FLUSH WITH ROADWAY PAVEMENT

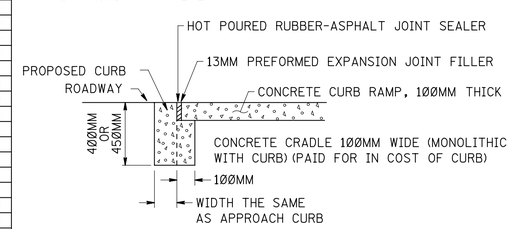

DROPPED CURB AND CRADLE

CURB RAMPS

CD-607-1.2

PUBLIC SIDEWALK CURB RAMPS DETECTABLE WARNING SURFACE

N.T.S.

HMA = HOT MIX ASPHALT

CD-607-1

NEW JERSEY DEPARTMENT OF TRANSPORTATION

CONSTRUCTION DETAILS

ID = TP2CIEM file = k:\road2\StdDet\cd6071.dgn queue = \\CADPLT06\MRPD6006 scale = 300.0000001.000000 pen table = G:\bridge\plot\pt\basic.tbl date = 21-JUL-2004 14:16
BDC03D-05 - MAJOR CHANGES TO ALL DETAILS
BDC01D-4 - ORIGINAL SHEET

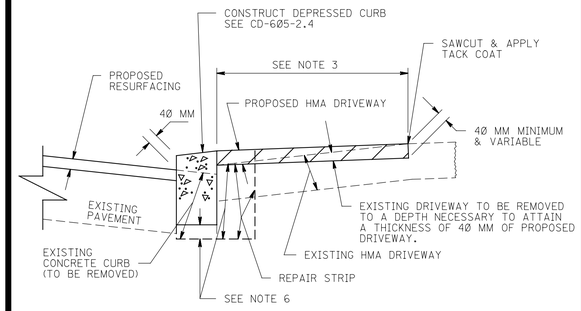

TYPE (A)

RESURFACING OF EXISTING HMA DRIVEWAY
(WITH DEPRESSED CURB)

CD-607-2.1

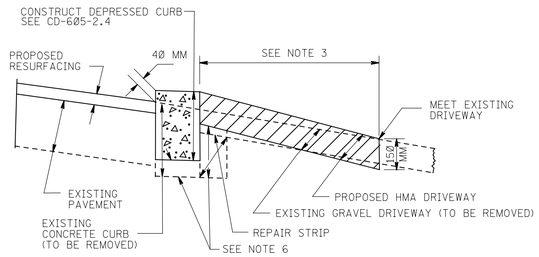

TYPE (C)

CONSTRUCTION OF HMA DRIVEWAY
OR CONVERSION OF EXISTING GRAVEL DRIVEWAY
(WITH DEPRESSED CURB)

CD-607-2.4

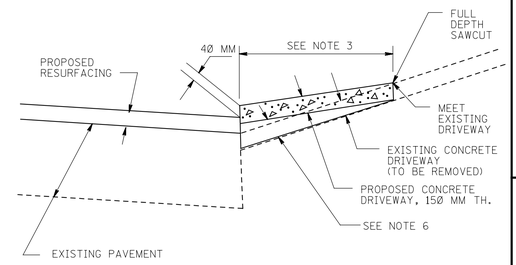

TYPE (F)

RECONSTRUCTION OF CONCRETE DRIVEWAY
(WITHOUT DEPRESSED CURB)

CD-607-2.7

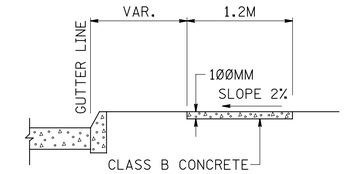

CONCRETE SIDEWALK, 100MM THICK

CD-607-2.9

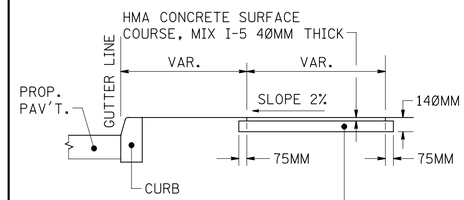

DENSE GRADED AGGREGATE BASE COURSE, 100MM THICK OR SOIL AGGREGATE BASE COURSE, 100MM THICK SOIL AGGREGATE BASE COURSE IS SOIL AGGREGATE, DESIGNATION I-5

HMA SIDEWALK, 140MM THICK

CD-607-2.10

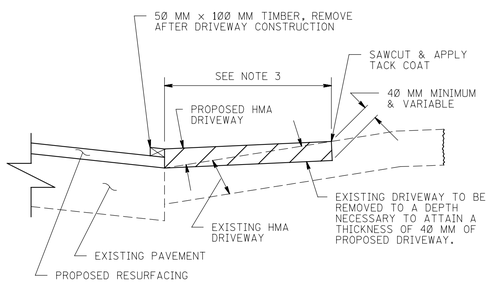

TYPE (B)

RESURFACING OF EXISTING HMA DRIVEWAY
(WITHOUT DEPRESSED CURB)

CD-607-2.2

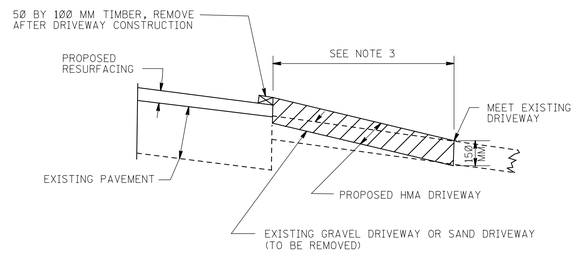

TYPE (D)

CONSTRUCTION OF HMA DRIVEWAY
OR CONVERSION OF EXISTING GRAVEL DRIVEWAY
(WITHOUT DEPRESSED CURB)

CD-607-2.5

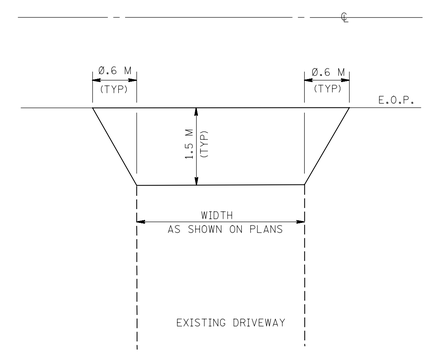

TYPICAL DRIVEWAY TREATMENT
PLAN VIEW

NOTES:

1. ALL MATERIAL, REPAIR STRIPS AND EXCAVATION FOR DRIVEWAY CONSTRUCTION TO BE INCLUDED IN THE BID PRICE FOR HMA DRIVEWAY, CONCRETE DRIVEWAY OR CONCRETE CURB.
2. HMA DRIVEWAY SURFACE COURSE, TOP LAYER AND BOTTOM LAYER SHALL BE MIX I-5, OR THE SURFACE COURSE MIX TO BE USED ON THE PROJECT.
3. LENGTH OF DRIVEWAY WORK SHALL BE 1.5 M UNLESS OTHERWISE SHOWN ON PLANS OR AS DIRECTED.
4. MAINTAIN EXISTING DIRECTION OF FLOW ON DRIVEWAY.
5. DENSE GRADED AGGREGATE BASE COURSE SHALL BE USED TO PROVIDE TEMPORARY ACCESS DURING DRIVEWAY CONSTRUCTION.
6. GRANULAR MATERIAL FROM THE PROJECT OR SOIL AGGREGATE AS DIRECTED.
7. NO BASE COURSE IS REQUIRED FOR DRIVEWAY.

CD-607-2.3

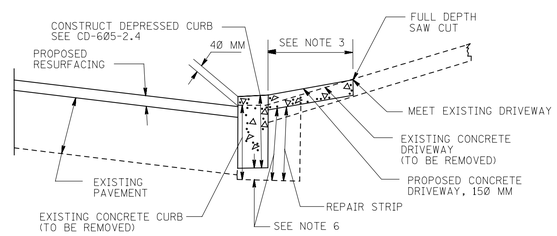

TYPE (E)

RECONSTRUCTION OF CONCRETE DRIVEWAY
(WITH DEPRESSED CURB)

CD-607-2.6

NOTE: ALL DIMENSIONS SHOWN ON THIS SHEET ARE IN MILLIMETERS UNLESS OTHERWISE NOTED.

CONCRETE AND HMA DRIVEWAYS AND SIDEWALKS

N.T.S.

HMA = HOT MIX ASPHALT

CD-607-2

NEW JERSEY DEPARTMENT OF TRANSPORTATION

CONSTRUCTION DETAILS

BDC03D-05	CD-607-2.9 & 2.10 HAVE BEEN
RELOCATED FROM	CD-607-1.1 & CD-607-1.2
BDC02D-06	CD-607-2.1, CD-607-2.2
& CD-607-2.3	
BDC01D-4	ORIGINAL SHEET

queue = \\CADPLT06\MRPD5686 = 300.0000000:i.0000000 pen table = G:\bridge\plot\pt\basic.tbl
date = 21-JUL-2004 14:18
ID = TP2CIEM file = k:\road2\StdDet\cd6072.dgn

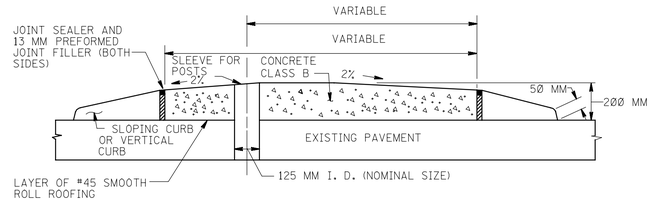

CONCRETE / WHITE CONCRETE ISLAND ON EXISTING PAVEMENT

CD-608-1.1

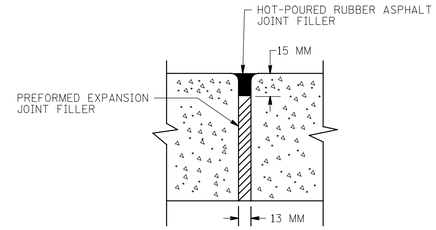

TYPICAL LONGITUDINAL & TRANSVERSE JOINT TREATMENT FOR CONCRETE ISLAND

CD-608-1.2

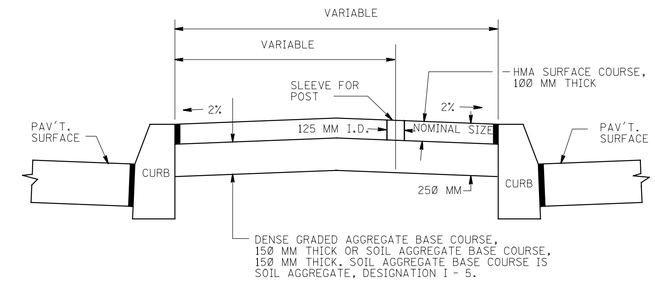

HMA ISLAND, 250 MM THICK

CD-608-1.3

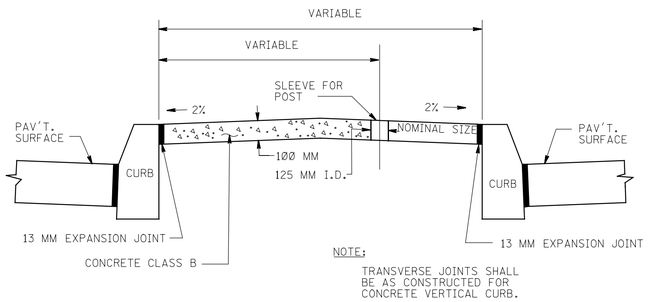

NOTE:
TRANSVERSE JOINTS SHALL BE AS CONSTRUCTED FOR CONCRETE VERTICAL CURB.

CONCRETE / WHITE CONCRETE ISLAND, 100 MM THICK

CD-608-1.4

NOTE: ALL DIMENSIONS SHOWN ON THIS SHEET ARE IN MILLIMETERS UNLESS OTHERWISE NOTED.

CONCRETE AND BITUMINOUS CONCRETE ISLANDS

N.T.S.

HMA = HOT MIX ASPHALT

CD-608-1

NEW JERSEY DEPARTMENT OF TRANSPORTATION

CONSTRUCTION DETAILS

BDC01D-4 - ORIGINAL SHEET

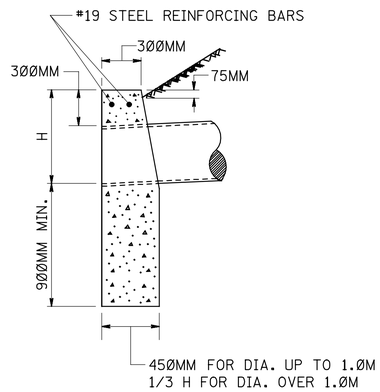

OUTLET

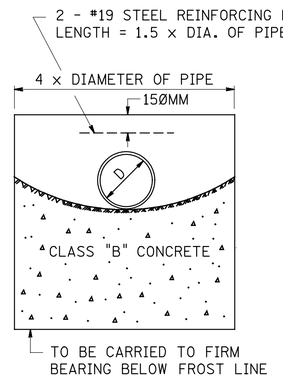

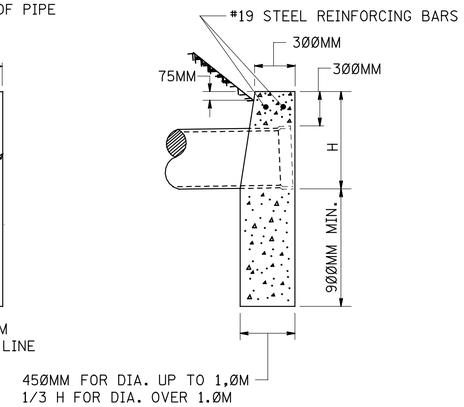

INLET

CONCRETE HEADWALLS

HEADWALL QUANTITY IN CUBIC METERS

PIPE DIA. (M.M.)	CORR. STEEL PIPE	REINF. CONC. PIPE
300	0.8	0.8
375	1.0	1.1
450	1.3	1.3
525	1.5	1.6
600	1.8	1.9
675	2.1	2.1
750	2.4	2.5
900	3.0	3.2
1050	3.7	4.4
1200	4.8	5.8
1350	6.2	7.4
1500	7.7	9.3
1650	9.4	11.4
1800	11.1	13.8

GENERAL NOTES:

1. THE RUBBING OF HEADWALLS TO REMOVE FORM MARKS AS REQUIRED IN THE NJDOT SPECIFICATIONS FOR CONCRETE STRUCTURES, WILL NOT BE REQUIRED FOR HEADWALLS AT THE BOTTOM OF EMBANKMENT IN RURAL AREAS.
2. ALL EDGES TO BE CHAMFERED 25MM.
3. FOR ARCH PIPE USE LENGTH OF HEADWALL AS 3H + SPAN.
4. FOR MORE THAN ONE PIPE, SET THE PIPE A MINIMUM OF 300MM APART (OUTSIDE BARREL TO OUTSIDE BARREL); THE ENDS OF THE HEADWALL SHALL BE SET 2 x DIAMETER OFF THE CENTERLINE OF THE CONTROLLING PIPE.

CD-610-1.1

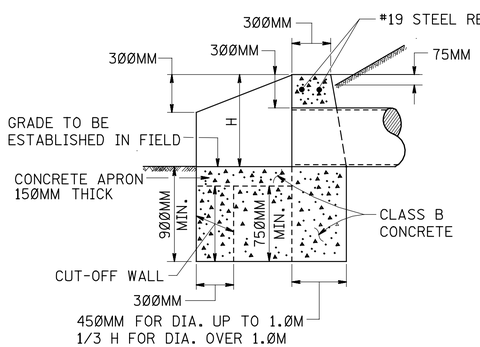

OUTLET END

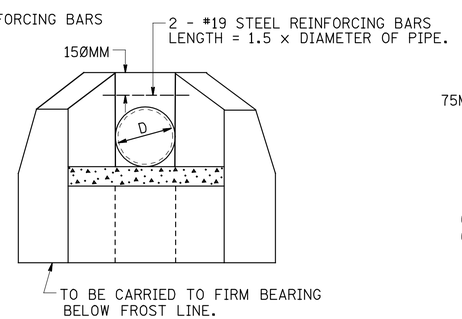

END VIEW OF OUTLET END

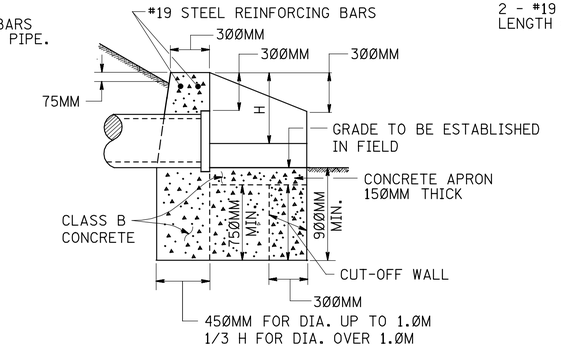

INLET END

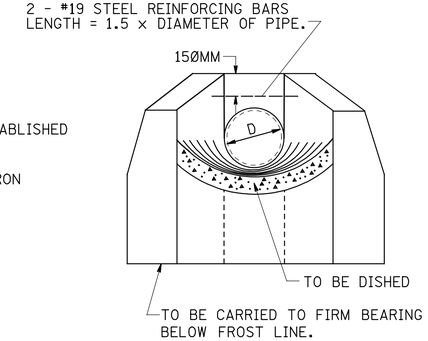

END VIEW OF INLET END ONLY

VOLUME OF CONCRETE IN HEADWALLS AND APRONS IN CUBIC METERS

PIPE DIA. (M.M.)	CORR. STEEL PIPE	REIN. CONC. PIPE	APRONS
300	1.2	1.3	0.3
375	1.5	1.6	0.4
450	1.8	1.9	0.5
525	2.1	2.3	0.6
600	2.5	2.6	0.7
675	2.8	3.1	0.8
750	3.2	3.4	0.9
900	4.1	4.3	1.1
1050	5.5	6.0	1.5
1200	7.2	8.0	1.8
1350	9.2	10.2	2.1
1500	11.5	12.7	2.4
1650	14.1	15.7	2.8
1800	17.1	19.0	3.2

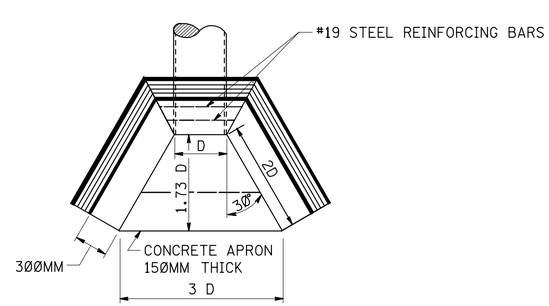

PLAN

CONCRETE HEADWALLS AND APRONS

GENERAL NOTES:

1. ALL EDGES TO BE CHAMFERED 25MM.
2. THE RUBBING OF HEADWALLS TO REMOVE FORM MARKS AS REQUIRED IN THE NJDOT SPECIFICATIONS FOR CONCRETE STRUCTURES, WILL NOT BE REQUIRED FOR HEADWALLS AT THE BOTTOM OF EMBANKMENTS IN RURAL AREAS.
3. FOR SLOPE DRAIN HEADWALLS, DIMENSIONS AND APRON GRADES SHALL BE SET BY ENGINEER.
4. FOR MORE THAN ONE PIPE, SET THE PIPES A MINIMUM OF 300MM APART (OUTSIDE BARREL TO OUTSIDE BARREL); THERE SHALL BE 300MM ABOVE THE TOP OF A PIPE IN A WINGWALL: THE TERMINUS OF THE WINGWALL SHALL BE 2 X DIAMETER FROM THE CENTERLINE OF THE PIPE IN A WINGWALL.
5. THE TERMINUS FOR OUTLET AND INLET APRONS SHALL BE SET BY EXTENDING THE PIPE GRADE AHEAD AND BACK, RESPECTIVELY.
6. FOR ARCH PIPE, THE SPAN SHALL BE SUBSTITUTED FOR D.

CD-610-1.2

CONCRETE HEADWALLS AND APRONS

N.T.S.

CD-610-1

NEW JERSEY DEPARTMENT OF TRANSPORTATION

CONSTRUCTION DETAILS

BDC020-01 - CD-610-1.1 & CD-610-1.2
BDC010-4 - ORIGINAL SHEET

STANDARD 0.9 M CONCRETE CULVERT

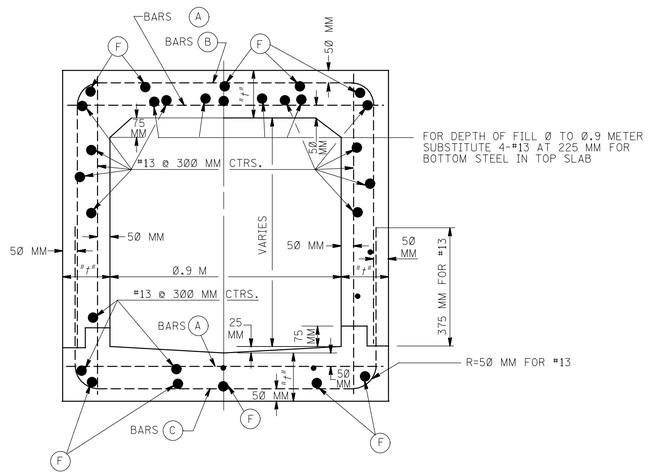

DEPTH OF FILL		BARS	SPAN 0.9 M		THICKNESS " t "
MIN.	MAX.		BARS	SPACING	
0	0.9 M	A	#13	125 MM	200 MM
		B&C	#13	300 MM	
0.9 M	3.0 M	A	#13	300 MM	200 MM
		B&C	#13	300 MM	
3.0 M	4.5 M	A	#13	225 MM	200 MM
		B&C	#13	250 MM	
4.5 M	6.0 M	A	#13	175 MM	200 MM
		B&C	#13	225 MM	
6.0 M	7.5 M	A	#13	150 MM	200 MM
		B&C	#13	175 MM	

STANDARD 1.2 M CONCRETE CULVERT

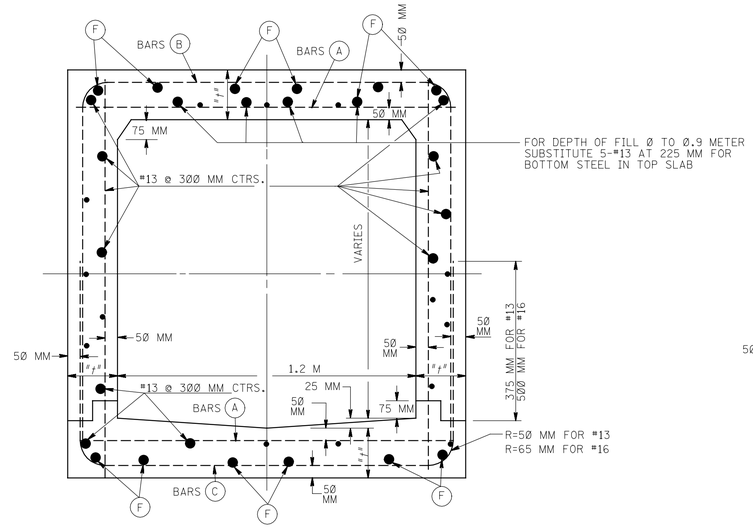

DEPTH OF FILL		BARS	SPAN 1.2 M		THICKNESS " t "
MIN.	MAX.		BARS	SPACING	
0	0.9 M	A	#13	100 MM	200 MM
		B&C	#13	250 MM	
0.9 M	3.0 M	A	#13	225 MM	200 MM
		B&C	#13	300 MM	
3.0 M	4.5 M	A	#13	150 MM	200 MM
		B&C	#13	225 MM	
4.5 M	6.0 M	A	#16	175 MM	200 MM
		B&C	#16	250 MM	
6.0 M	7.5 M	A	#16	150 MM	230 MM
		B&C	#16	250 MM	

STANDARD 1.5 M CONCRETE CULVERT

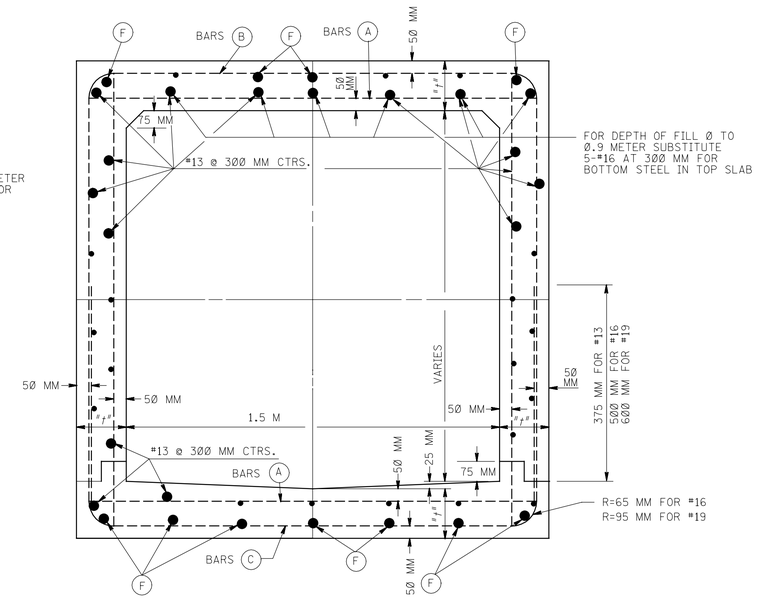

DEPTH OF FILL		BARS	SPAN 1.5 M		THICKNESS " t "
MIN.	MAX.		BARS	SPACING	
0	0.9 M	A	#16	125 MM	200 MM
		B&C	#16	300 MM	
0.9 M	3.0 M	A	#13	150 MM	200 MM
		B&C	#13	225 MM	
3.0 M	4.5 M	A	#16	175 MM	230 MM
		B&C	#16	300 MM	
4.5 M	6.0 M	A	#16	175 MM	255 MM
		B&C	#16	250 MM	
6.0 M	7.5 M	A	#16	125 MM	255 MM
		B&C	#16	200 MM	
7.5 M	12.0 M	A	#19	150 MM	280 MM
		B&C	#19	225 MM	

NOTE:
- TOP AND BOTTOM LAYER OF LONGITUDINAL BARS (F) TO BE SAME SIZE AS BARS A, B & C AND SPACED 300 MM CTRS.
- FOR BACKFILLING AND EMBANKMENT DETAILS SEE NJDOT SPECIFICATIONS.
- REINFORCING BARS SHALL CONFORM TO ASTM A 615/A 615M.

VOLUME OF CONCRETE AND WEIGHT OF REINFORCEMENT PER LINEAR METER OF CULVERT

SIZE OF CULVERT OPENING METERS	0.9 M × 0.9 M					1.2 M × 0.9 M					1.2 M × 1.2 M				
MAX DEPTH OF FILL METERS	0.9	3	4.5	6	7.5	0.9	3	4.5	6	7.5	0.9	3	4.5	6	7.5
VOLUME OF CONCRETE C.M. PER METER	0.88	0.88	0.88	0.88	0.88	1.00	1.00	1.00	1.00	1.15	1.12	1.12	1.12	1.12	1.29
REINFORCEMENT KG PER METER	79	64	71	79	88	98	74	89	112	118	104	80	94	125	132

SIZE OF CULVERT OPENING METERS	1.5 M × 0.9 M					1.5 M × 1.2 M					1.5 M × 1.5 M					
MAX DEPTH OF FILL METERS	0.9	3	4.5	6	7.5	0.9	3	4.5	6	7.5	0.9	3	4.5	6	7.5	12
VOLUME OF CONCRETE C.M. PER METER	1.12	1.12	1.29	1.46	1.46	1.24	1.24	1.43	1.60	1.60	1.36	1.36	1.55	1.75	1.75	1.96
REINFORCEMENT KG PER METER	131	110	125	132	156	140	121	134	143	170	147	126	141	152	182	223

NOTE:
FIRST DIMENSION OF CULVERT SIZE INDICATES THE SPAN.
CULVERT TO BE CONSTRUCTED OF CLASS "A" CONCRETE.

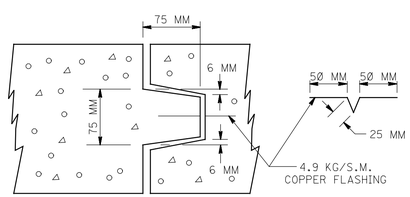

SECTION THRU KEY OF CONSTRUCTION JOINT

CONSTRUCTION JOINT OF CULVERT

TO BE CONSTRUCTED IN TOP, WALLS AND BASE OF CULVERT NOT MORE THAN 10.5 M APART

CD-610-2.2

CD-610-2.1

NOTE: ALL DIMENSIONS SHOWN ON THIS SHEET ARE IN MILLIMETERS UNLESS OTHERWISE NOTED.

CONCRETE CULVERTS

N.T.S.

CD-610-2

NEW JERSEY DEPARTMENT OF TRANSPORTATION

CONSTRUCTION DETAILS

RDC010-4 - ORIGINAL SHEET

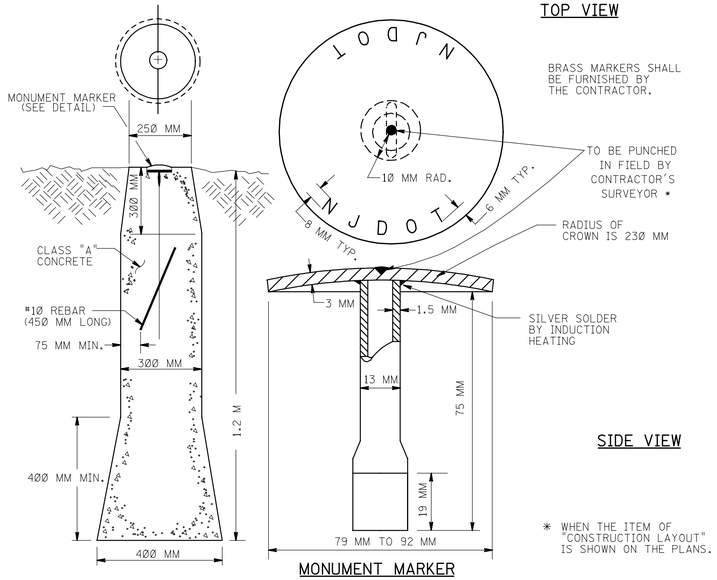

MONUMENT MARKER

MONUMENTS TO BE SET FLUSH WITH GROUND

GENERAL NOTES:

THE MONUMENTS SHALL BE CONSTRUCTED IN ACCORDANCE WITH NJDOT SPECIFICATIONS. THESE MONUMENTS ARE TO BE POURED IN PLACE AND THE MARKER PLUMBED INTO POSITION AND SET IN THE CONCRETE IN SUCH A MANNER THAT NO AIR WILL BE TRAPPED ON THE UNDERSIDE OF THE MARKER.

#10 REBAR, 450 MM LONG, TO BE PLACED AT THE TIME OF CONCRETE POUR. MONUMENT MARKER IS TO BE MADE OF BRASS, CONFORMING TO ASTM B-19.

MONUMENTS

CD-611-1.1

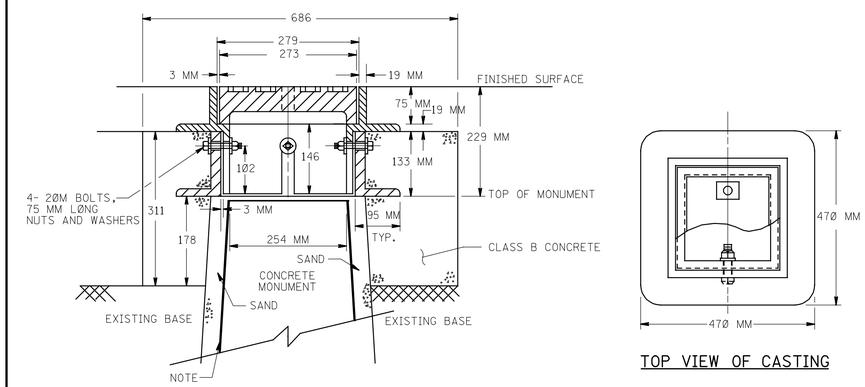

TOP VIEW OF CASTING

NOTE:

A LAYER OF FELT OR NYLON OR TAR PAPER NEEDED BETWEEN SAND AND CONCRETE MONUMENT.

MONUMENT BOXES FOR NEW MONUMENT

CD-611-1.2

NOTE: ALL DIMENSIONS SHOWN ON THIS SHEET ARE IN MILLIMETERS UNLESS OTHERWISE NOTED.

MONUMENTS AND MONUMENT BOXES

N.T.S.

CD-611-1

NEW JERSEY DEPARTMENT OF TRANSPORTATION

CONSTRUCTION DETAILS

BDC01D-4 - ORIGINAL SHEET

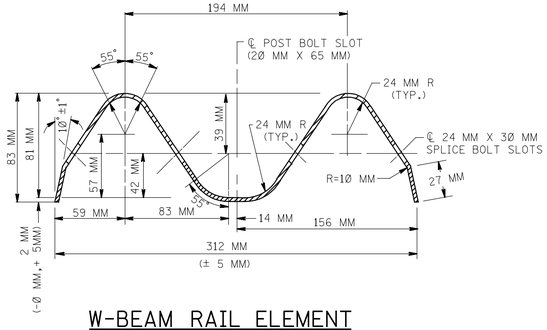

W-BEAM RAIL ELEMENT

RAIL ELEMENT SHALL BE SUPPLIED
IN LENGTHS OF 4.130 M OR 7.940 M

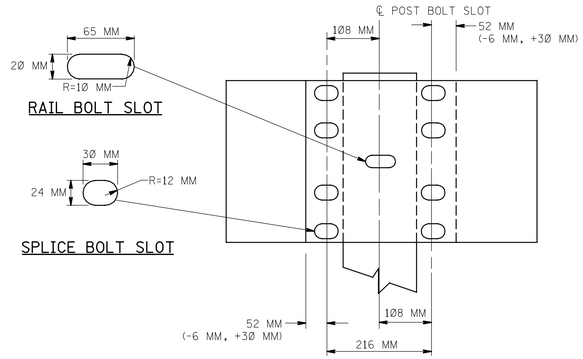

RAIL SPLICE

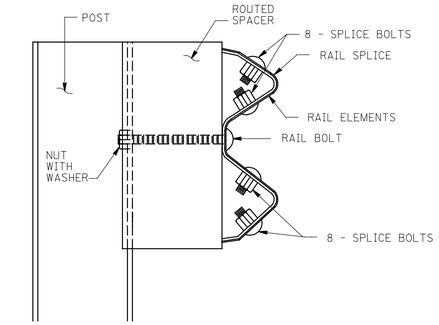

BEAM GUIDE RAIL POST ASSEMBLY

GENERAL NOTES

1. ALL DIMENSIONS ARE SUBJECT TO MANUFACTURING TOLERANCES.
2. RAIL ELEMENTS SHALL BE FURNISHED SHOPCURVED, CONCAVE OR CONVEX, FOR RADII LESS THAN 46 METERS.
3. THE STEEL FOR RAIL ELEMENTS AND BOLTS SHALL CONFORM TO NJDOT STANDARD SPECIFICATIONS AND ITS AMENDMENTS.

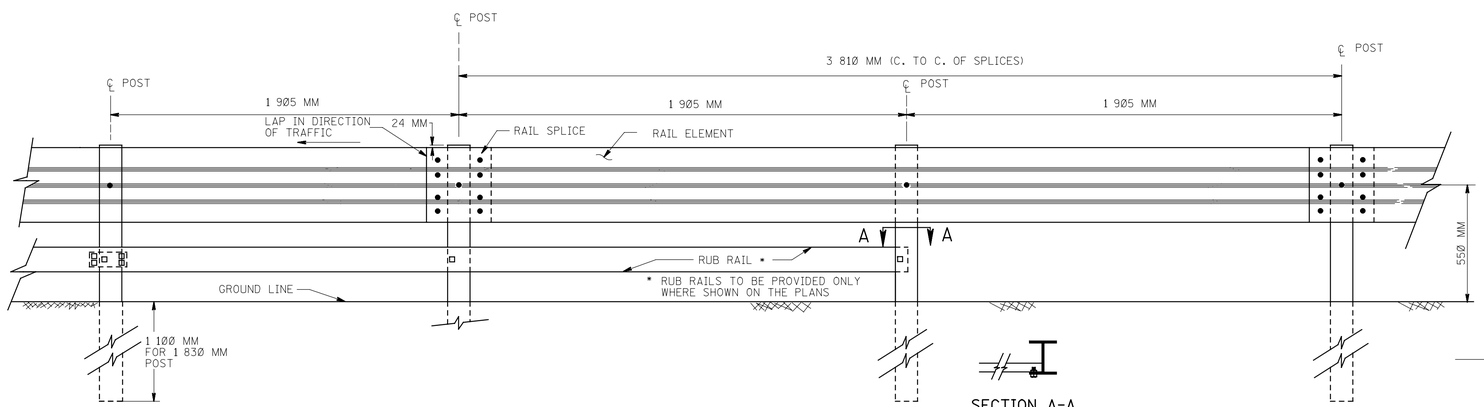

BEAM GUIDE RAIL

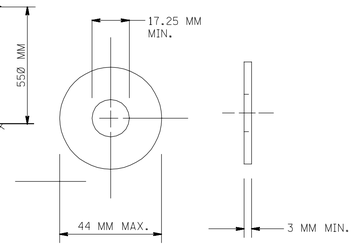

STEEL WASHER

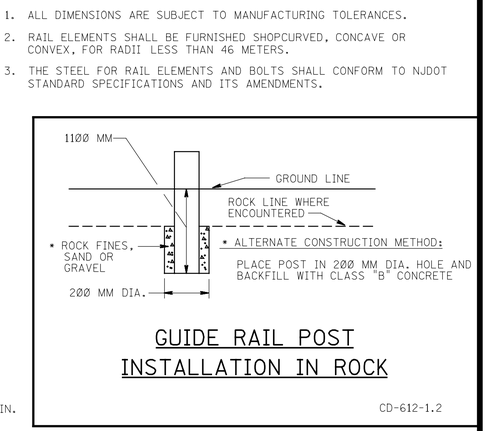

GUIDE RAIL POST INSTALLATION IN ROCK

CD-612-1.2

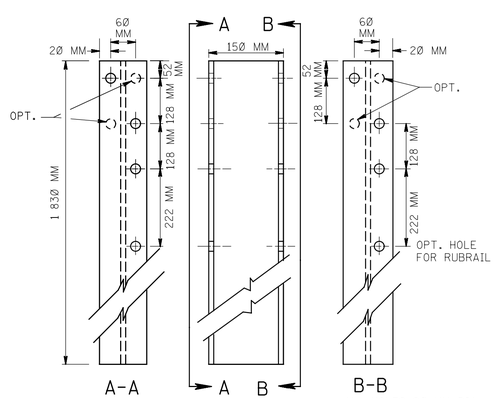

1 830 MM POST

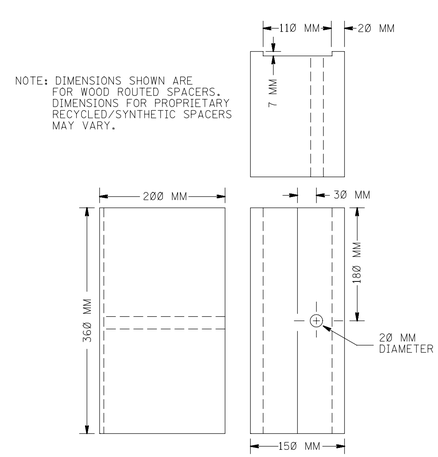

360 MM ROUTED SPACER

WOOD OR APPROVED RECYCLED/
SYNTHETIC MATERIALS

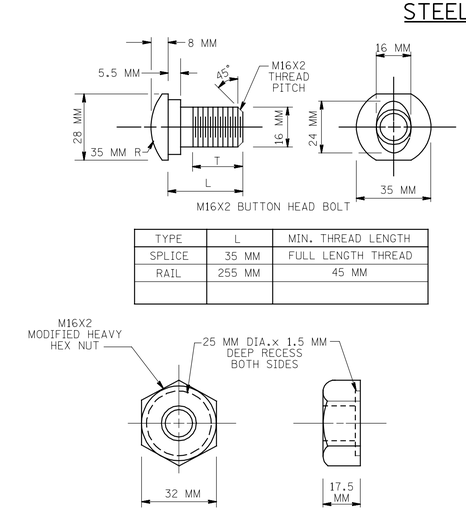

TYPE	L	MIN. THREAD LENGTH
SPLICE	35 MM	FULL LENGTH THREAD
RAIL	255 MM	45 MM

SPLICE & RAIL NUT & BOLT

CD-612-1.1

BEAM GUIDE RAIL

N.T.S.

NOTE: ALL DIMENSIONS SHOWN ON THIS SHEET ARE
IN MILLIMETERS UNLESS OTHERWISE NOTED.

CD-612-1

NEW JERSEY DEPARTMENT OF TRANSPORTATION

CONSTRUCTION DETAILS

BDC02D-01 - CD-612-1.2
BDC01D-4 - ORIGINAL SHEET

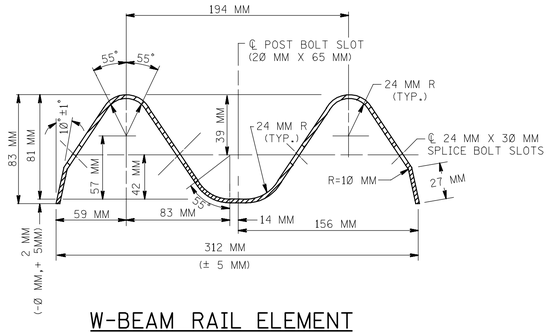

W-BEAM RAIL ELEMENT

RAIL ELEMENT SHALL BE SUPPLIED
IN LENGTHS OF 4.130 M OR 7.940 M

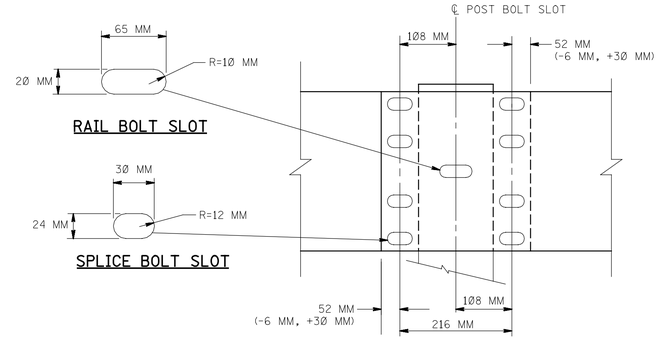

RAIL SPLICE

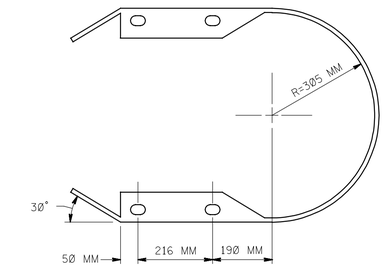

END SECTION (BUFFER)

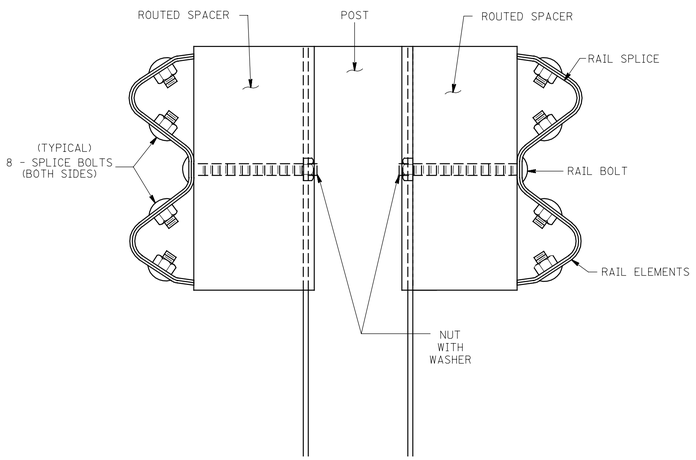

DUAL - FACED POST ASSEMBLY

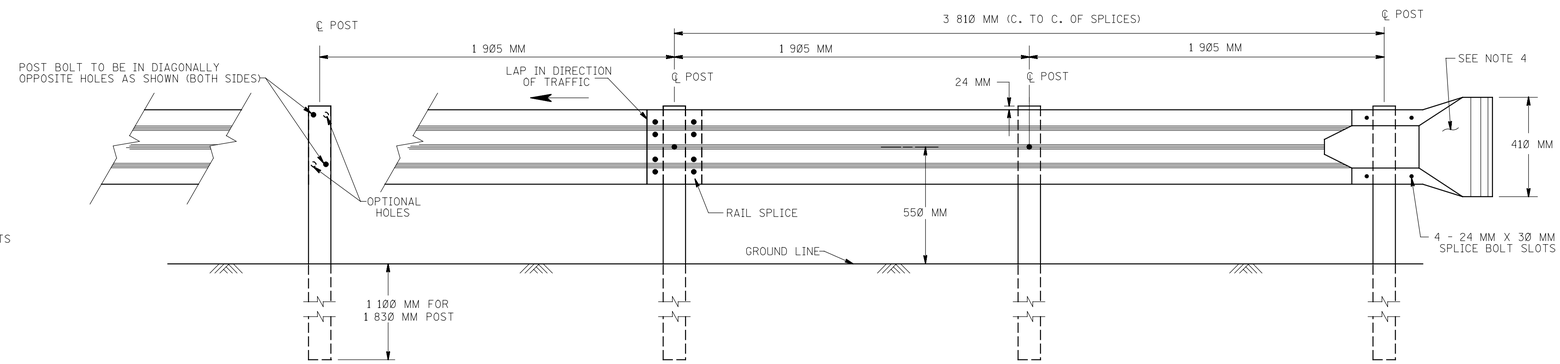

BEAM GUIDE RAIL, DUAL-FACED

GENERAL NOTES

1. ALL DIMENSIONS ARE SUBJECT TO MANUFACTURING TOLERANCES.
2. RAIL ELEMENTS SHALL BE FURNISHED SHOPCURVED, CONCAVE OR CONVEX, FOR RADII BETWEEN 6 METERS AND 46 METERS.
3. THE STEEL FOR RAIL ELEMENTS AND BOLTS SHALL BE OF A QUALITY THAT WILL DEVELOP SPECIFICATION FOR BEAM AND TENSILE STRENGTHS.
4. USE END SECTION (BUFFER) UNLESS THE CONSTRUCTION PLANS CALL FOR ANOTHER TYPE OF END TREATMENT.

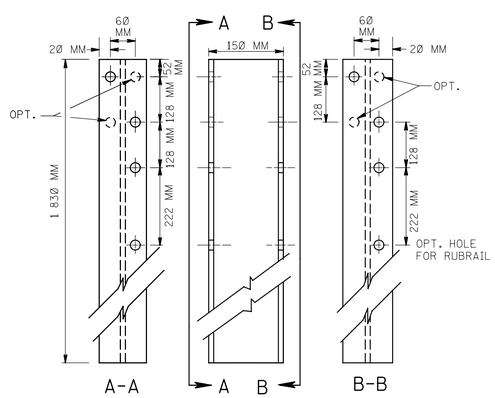

ALL HOLES 20 MM DIA.

1 830 MM POST

W150X13.5 STRUCTURAL SHAPE

NOTE: DIMENSIONS SHOWN ARE FOR WOOD ROUTED SPACERS. DIMENSIONS FOR PROPRIETARY RECYCLED/SYNTHETIC SPACERS MAY VARY.

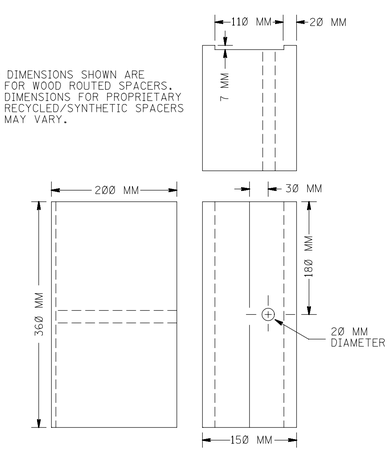

360 MM ROUTED SPACER

WOOD OR APPROVED RECYCLED/
SYNTHETIC MATERIALS

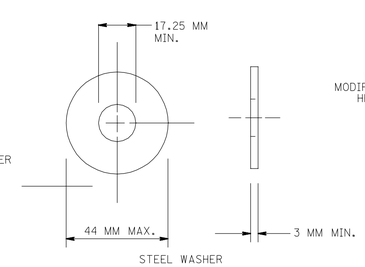

STEEL WASHER

WASHER

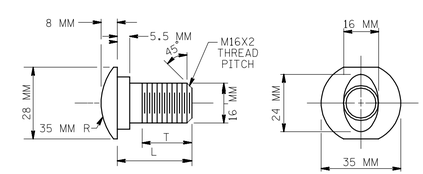

M16X2 BUTTON HEAD BOLT

TYPE	L	MIN. THREAD LENGTH
SPLICE	35 MM	FULL LENGTH THREAD
RAIL	255 MM	45 MM

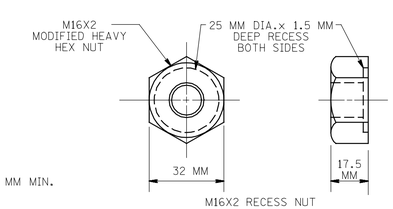

M16X2 RECESS NUT

SPLICE & RAIL NUT & BOLT

NOTE: ALL DIMENSIONS SHOWN ON THIS SHEET ARE IN MILLIMETERS UNLESS OTHERWISE NOTED.

CD-612-2.1

BEAM GUIDE RAIL, DUAL-FACED

N.T.S.

CD-612-2

NEW JERSEY DEPARTMENT OF TRANSPORTATION

CONSTRUCTION DETAILS

BDC01D-4 - ORIGINAL SHEET

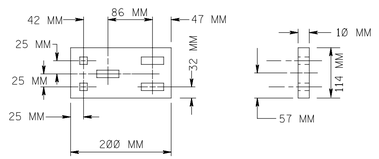

SPLICE PLATE

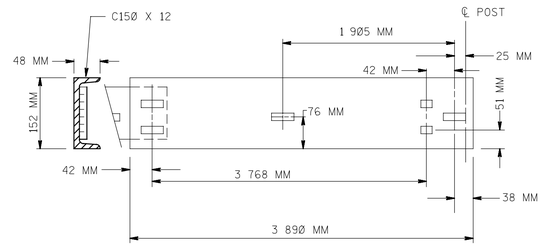

NOTE:
ALL RECTANGULAR SLOTS ARE 18 MM X 50 MM
ALL SQUARE HOLES ARE 18 MM

RUB RAIL MAY BE SUPPLIED IN
LENGTHS OF 3890 MM OR 7700 MM

C150 X 12

NOTE:
USE EITHER C150 X 12 OR
BENT PLATE FOR RUB RAIL.

CD-612-3.1

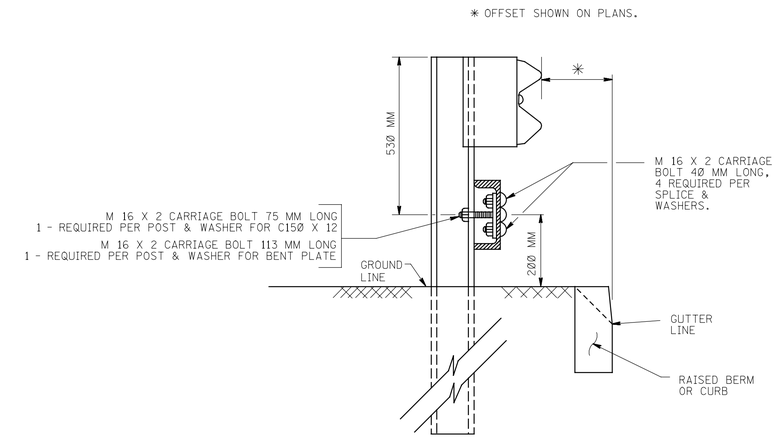

RUB RAIL SECTION

NOTE:
USE EITHER C150 X 12 OR
BENT PLATE FOR RUB RAIL.

CD-612-3.2

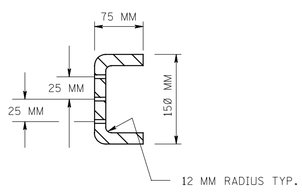

SECTION A-A

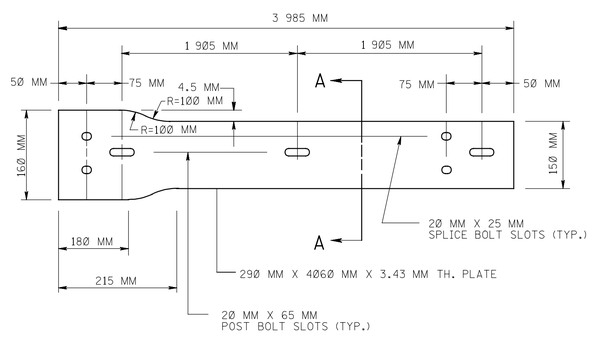

BENT PLATE

NOTE:
USE EITHER C150 X 12 OR
BENT PLATE FOR RUB RAIL.

CD-612-3.3

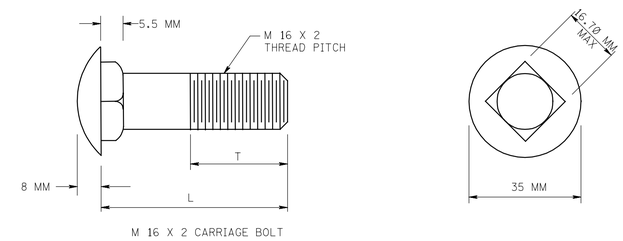

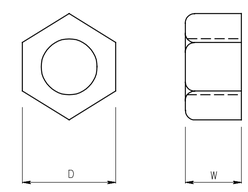

M 16 X 2 HEX NUT

L	THREAD LENGTH (T)	D	W
40 MM	FULL THREAD LENGTH	24 MM	14.8 MM
100 MM	40 MM MIN.	32 MM	17.5 MM

BOLT DETAIL

CD-612-3.4

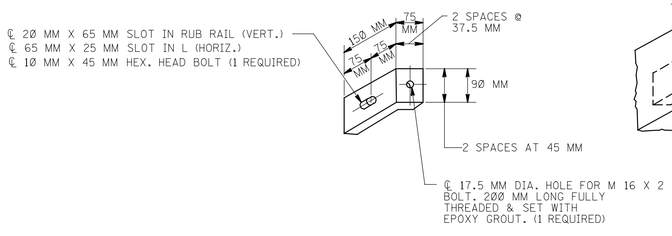

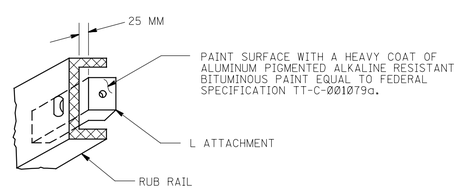

RUB RAIL ANGLE ATTACHMENT

SEE CD-612-9.4 FOR GENERAL NOTES

CD-612-3.5

RUB RAIL

N.T.S.

CD-612-3

NEW JERSEY DEPARTMENT OF TRANSPORTATION

CONSTRUCTION DETAILS

NOTE: ALL DIMENSIONS SHOWN ON THIS SHEET ARE IN MILLIMETERS UNLESS OTHERWISE NOTED.

BDC01D-4 - ORIGINAL SHEET

NOTE:

CABLE TO BE PARALLEL TO GUIDE RAIL FOR STRAIGHT RUNS OF RAIL. CABLE MAY HAVE ANGLE POINT AT ANCHOR PLATE IF RAIL IS CURVED.

NOTE:

PAYMENT FOR THE ITEM ANCHORAGE SHALL INCLUDE THE ANCHOR PLATE, CABLE ASSEMBLY & FOOTING.

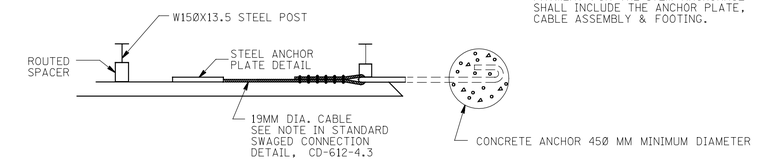

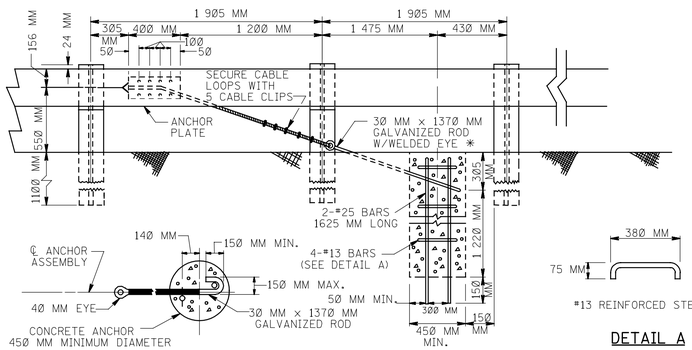

SINGLE GUIDE RAIL ANCHOR

* NOTE:

0.025 MM TH. COAT OF COAL TAR ENAMEL OR EPOXY SHALL BE APPLIED TO GALVANIZED ROD BETWEEN EYE AND CONCRETE ANCHOR.

BEAM GUIDE RAIL IN LINE ANCHORAGES

CD-612-4.1

NOTE:

CABLE TO BE PARALLEL TO GUIDE RAIL FOR STRAIGHT RUNS OF RAIL. CABLE MAY HAVE ANGLE POINT AT ANCHOR PLATE IF RAIL IS CURVED.

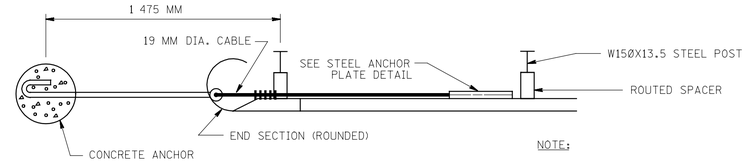

NOTE:

PAYMENT FOR THE ITEM ANCHORAGE SHALL INCLUDE THE ANCHOR PLATE, CABLE ASSEMBLY & FOOTING.

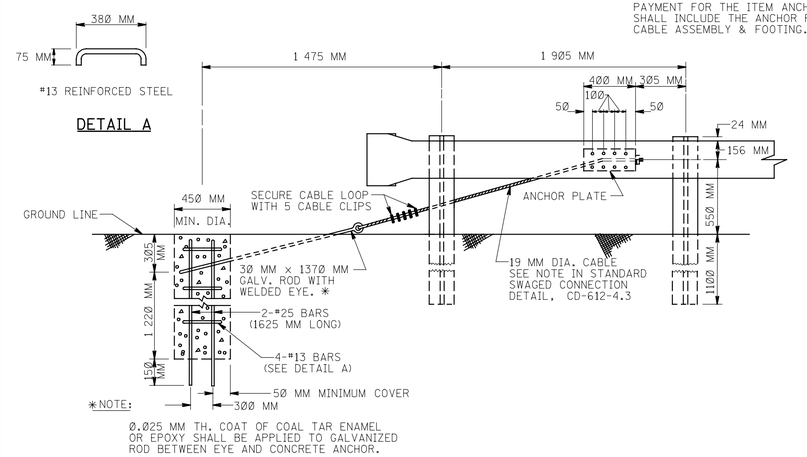

* NOTE:

0.025 MM TH. COAT OF COAL TAR ENAMEL OR EPOXY SHALL BE APPLIED TO GALVANIZED ROD BETWEEN EYE AND CONCRETE ANCHOR.

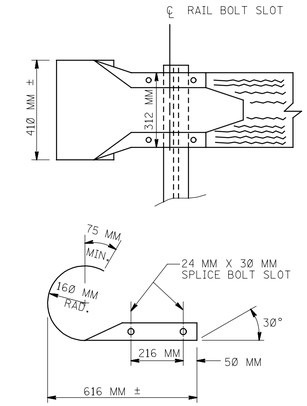

END SECTION (ROUNDED)

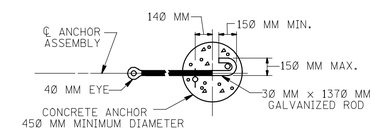

SINGLE GUIDE RAIL ANCHOR

BEAM GUIDE RAIL ANCHORAGES

CD-612-4.2

U BOLTS OF CLIP ON SHORT END OF CABLE

CABLE CLIP INSTALLATION

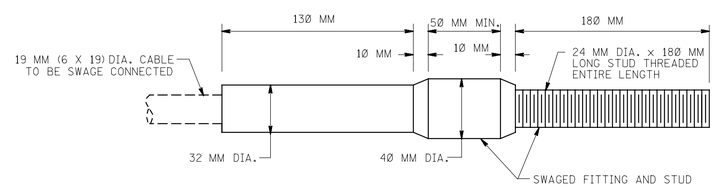

STANDARD SWAGED CONNECTION

NOTE:

OTHER ANCHOR CABLE ASSEMBLIES MAY BE USED. MINIMUM BREAKING STRENGTH OF ASSEMBLY SHALL BE 178 KILONEWTONS

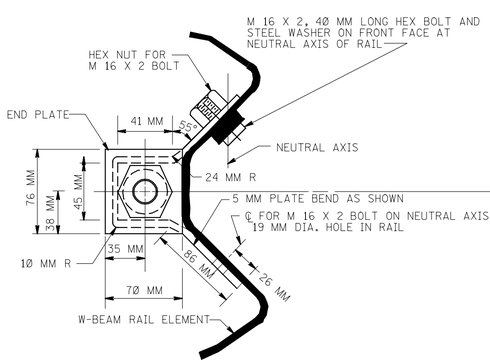

SECTION A-A (CD-612-4.1, CD-612-4.2)

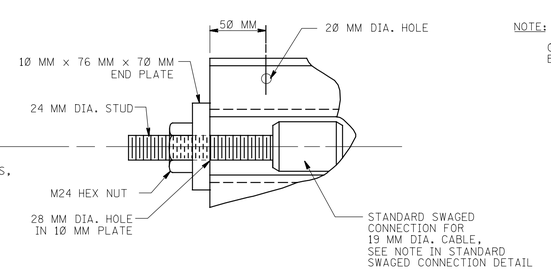

ANCHOR PLATE DETAILS

CD-612-4.3

BEAM GUIDE RAIL ANCHORAGES

N.T.S.

CD-612-4

NEW JERSEY DEPARTMENT OF TRANSPORTATION

CONSTRUCTION DETAILS

NOTE: ALL DIMENSIONS SHOWN ON THIS SHEET ARE IN MILLIMETERS UNLESS OTHERWISE NOTED.

BDC01D-4 - ORIGINAL SHEET

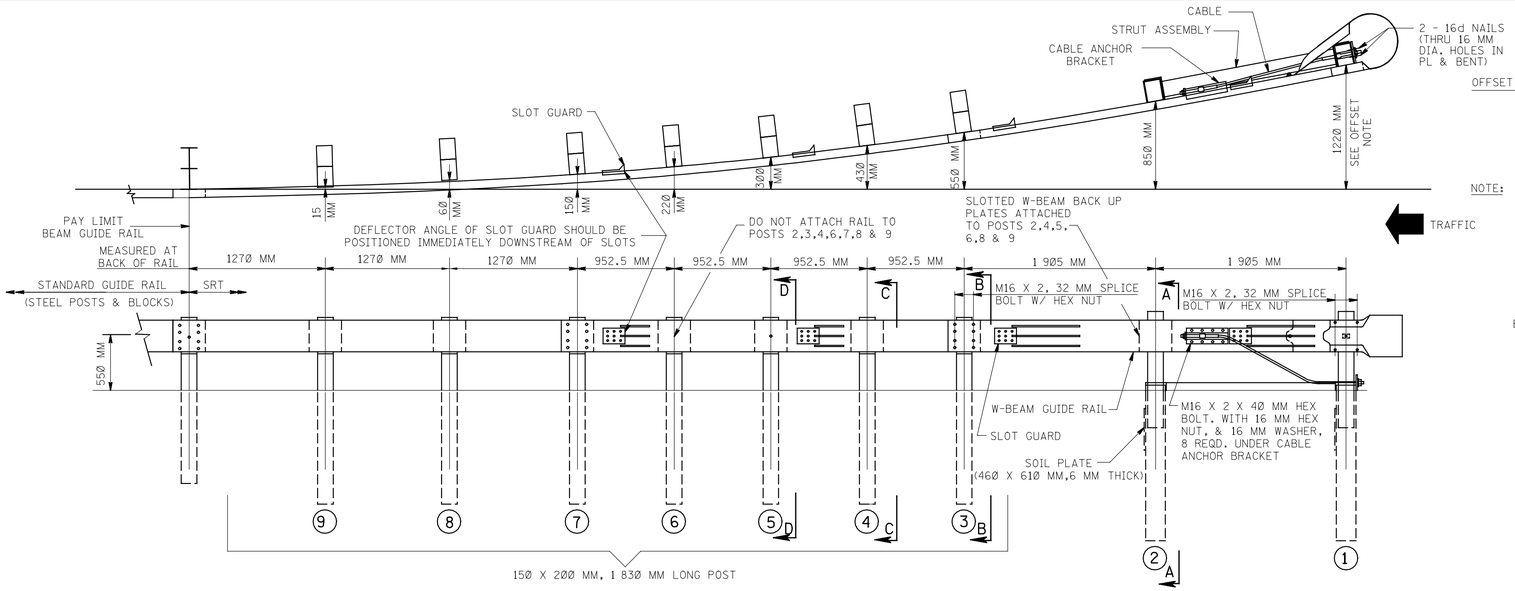

OFFSET NOTE:

THE POST OFFSET DIMENSIONS ARE GIVEN TO THE CENTER OF THE TRAFFIC FACE OF THE BLOCKOUTS, EXCEPT AT THE FIRST TWO POSTS, WHERE THE DIMENSIONS IS TO THE CENTER OF THE TRAFFIC FACE OF THE POST. OFFSET POINTS ARE TO BE LOCATED BY CHORD MEASUREMENTS AT THE BACK OF THE RAIL EQUAL TO THE NOMINAL POST SPACINGS SHOWN. POSTS ARE TO BE SET APPROXIMATELY RADIAL TO THE RAILING AT EACH POST LOCATION.

NOTE: SEE CD 612-8.6 FOR SLOPE TREATMENT AT SLOTTED GUIDE RAIL TERMINALS

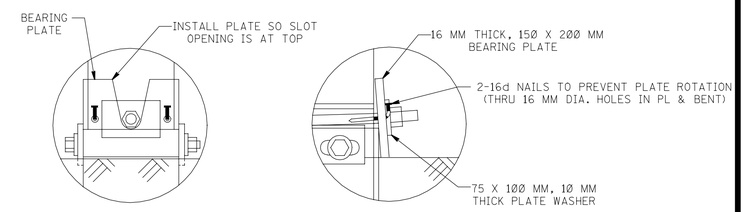

BEARING PLATE ORIENTATION

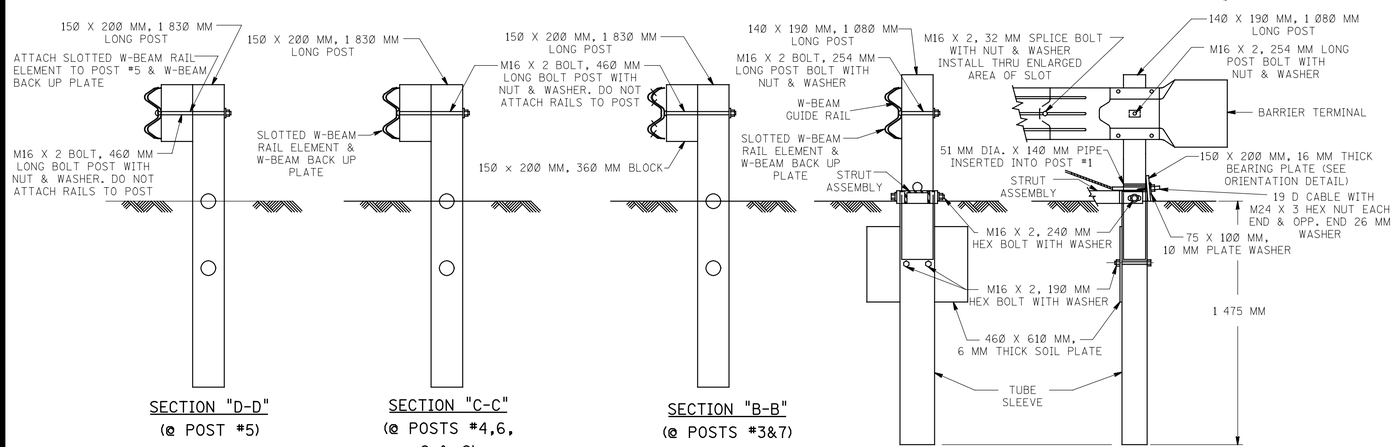

SECTION "D-D" (@ POST #5)

SECTION "C-C" (@ POSTS #4,6, 8 & 9)

SECTION "B-B" (@ POSTS #3&7)

SECTION "A-A" (@ POST #2)

ENLARGED VIEW (@ POST #1)

SLOTTED GUIDE RAIL TERMINALS

CD-612-5.1

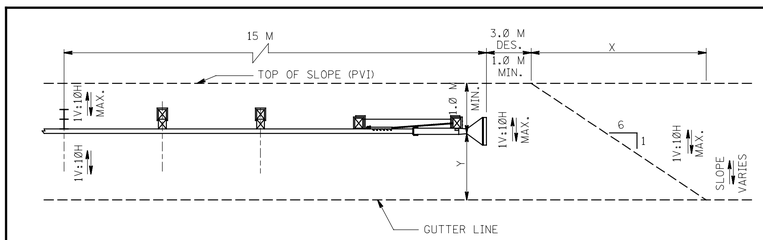

Y = OFFSET FROM GUTTER LINE	X	X + 3.0 (DES.)
* 0.3 M	7.3 M	10.3 M
1.2 M	12.8 M	15.8 M
2.1 M	18.3 M	21.3 M
3.0 M	23.8 M	26.8 M

GRADING TREATMENT AT EXTRUDER TERMINALS

* NOTE:
WHERE GUIDE RAIL IS INSTALLED FLUSH WITH THE GUTTER LINE, THE EXTRUDER TERMINAL SHALL BE CONSTRUCTED WITH A 1:50 STRAIGHT FLARE FOR ITS ENTIRE LENGTH SO THAT THE EXTRUDER HEAD DOES NOT PROTRUDE INTO THE ROADWAY.

CD-612-5.3

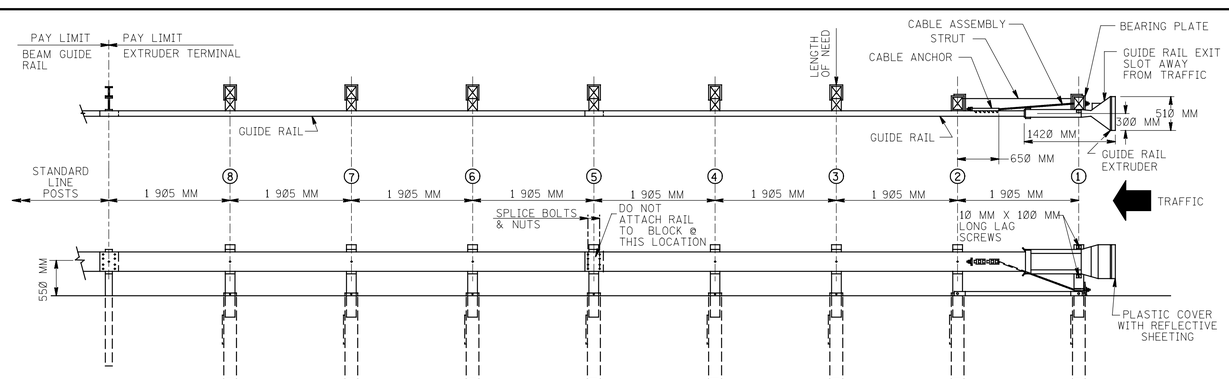

EXTRUDER TERMINALS

NOTE: WOOD POSTS 1 THRU 8 SHALL BE CONSTRUCTED USING FOUNDATION TUBES.

CD-612-5.2

SLOTTED GUIDE RAIL TERMINALS AND EXTRUDER TERMINALS

N.T.S.

CD-612-5

NEW JERSEY DEPARTMENT OF TRANSPORTATION

CONSTRUCTION DETAILS

RDC01D-4 - ORIGINAL SHEET

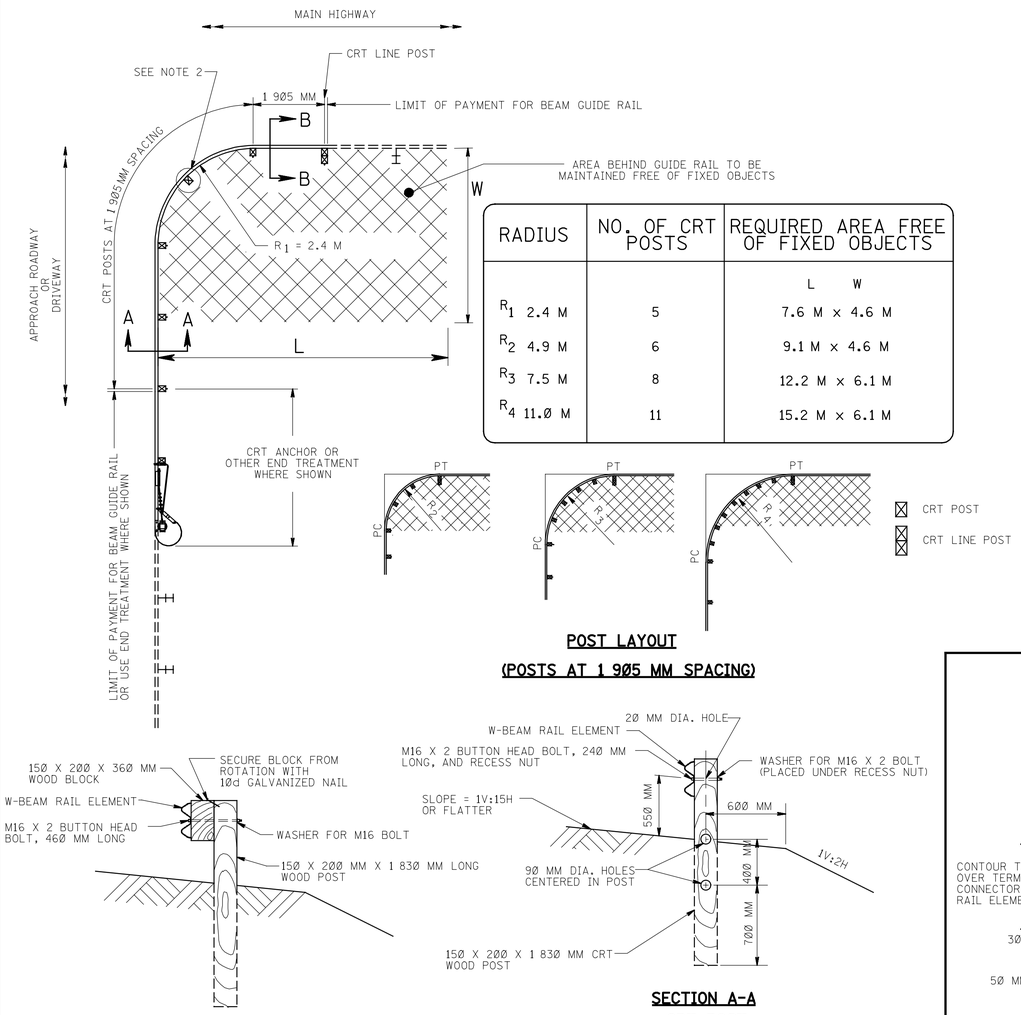

RADIUS	NO. OF CRT POSTS	REQUIRED AREA FREE OF FIXED OBJECTS
		L W
R_1 2.4 M	5	7.6 M × 4.6 M
R_2 4.9 M	6	9.1 M × 4.6 M
R_3 7.5 M	8	12.2 M × 6.1 M
R_4 11.0 M	11	15.2 M × 6.1 M

POST LAYOUT

(POSTS AT 1 905 MM SPACING)

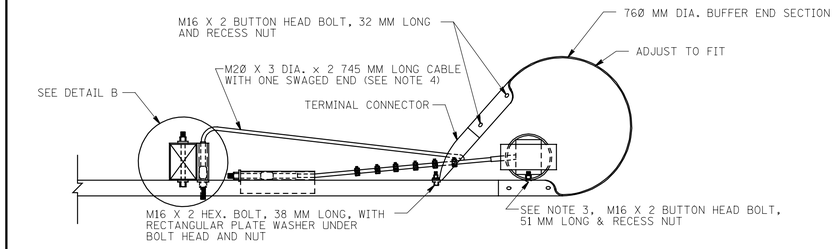

PLAN

GENERAL NOTES :

1. NO WASHERS ARE USED ON THE M16 X 2 BUTTON HEAD BOLTS CONNECTING THE RAIL TO THE CONTROLLED RELEASE TERMINAL (CRT) POSTS.
2. FOR 2.4 M RADIUS, THE RAIL ELEMENT SHALL NOT BE BOLTED TO THE CRT POST AT THE CENTER OF THE NOSE AS SHOWN.
3. ATTACH W-BEAM TO STEEL PIPE WITH BUTTON HEAD BOLT WITH NO WASHER. NO CONNECTION TO POST IS REQUIRED.
4. WIRE ROPE CABLE SHALL CONFORM TO THE REQUIREMENTS OF AASHTO M30 AND SHALL BE 19 MM DIAMETER PREFORMED, 6 x 19, WIRE STRAND CORE OR INDEPENDENT WIRE ROPE CORE, GALVANIZED, RIGHT REGULAR LAY, MANUFACTURED OF IMPROVED PLOW STEEL WITH A MINIMUM BREAKING STRENGTH OF 190 KILONEWTONS.
5. STRUCTURAL TUBING SHALL CONFORM TO ASTM A500.

CD - 612-6.3

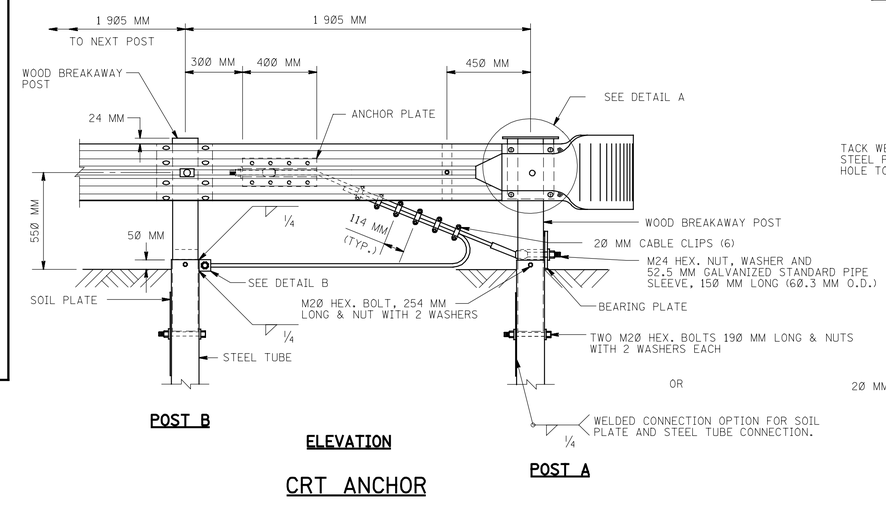

ELEVATION

CRT ANCHOR

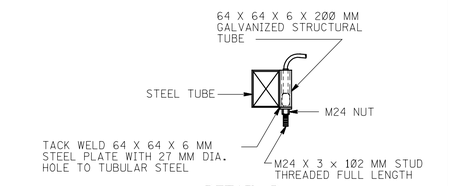

DETAIL B

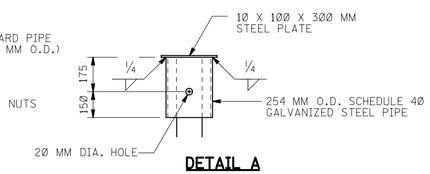

DETAIL A

SECTION B-B

CRT LINE POST

SECTION A-A

CRT POST

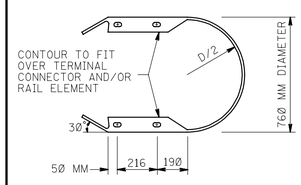

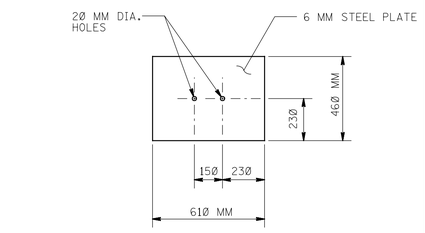

SOIL PLATE

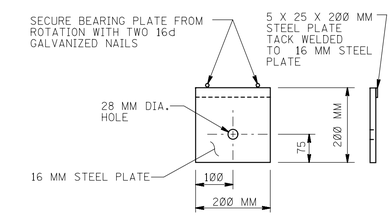

BEARING PLATE

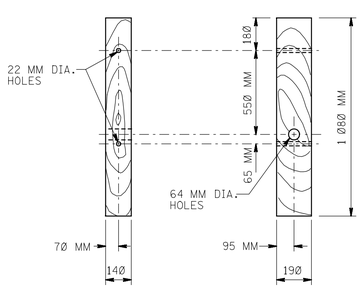

WOOD BREAKAWAY POST

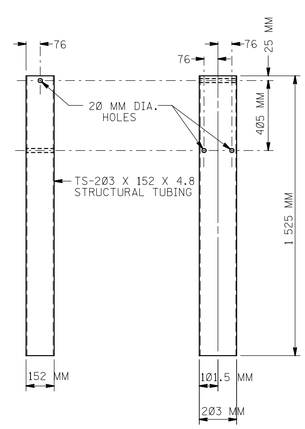

STEEL TUBE

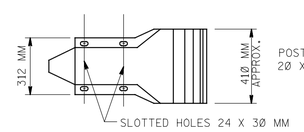

760 MM DIA. BUFFER END SECTION

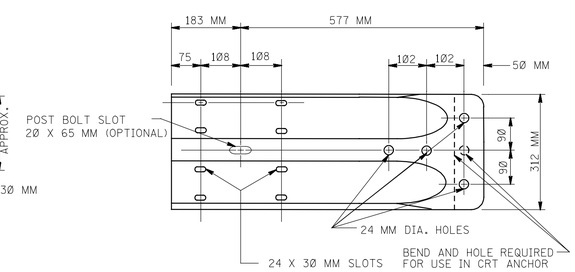

TERMINAL CONNECTOR

CONTROLLED RELEASE TERMINALS

N.T.S.

CD-612-6

NEW JERSEY DEPARTMENT OF TRANSPORTATION

CONSTRUCTION DETAILS

CONTROLLED RELEASE TERMINALS

CD - 612-6.1

CONTROLLED RELEASE TERMINAL ANCHORAGE

CD - 612-6.2

NOTE: ALL DIMENSIONS SHOWN ON THIS SHEET ARE IN MILLIMETERS UNLESS OTHERWISE NOTED.

BDC010-4 - ORIGINAL SHEET

MEDIAN GUIDE RAIL WHEN CLEARANCE FROM BACK OF RAIL TO OBSTRUCTION IS 1.2 M OR GREATER

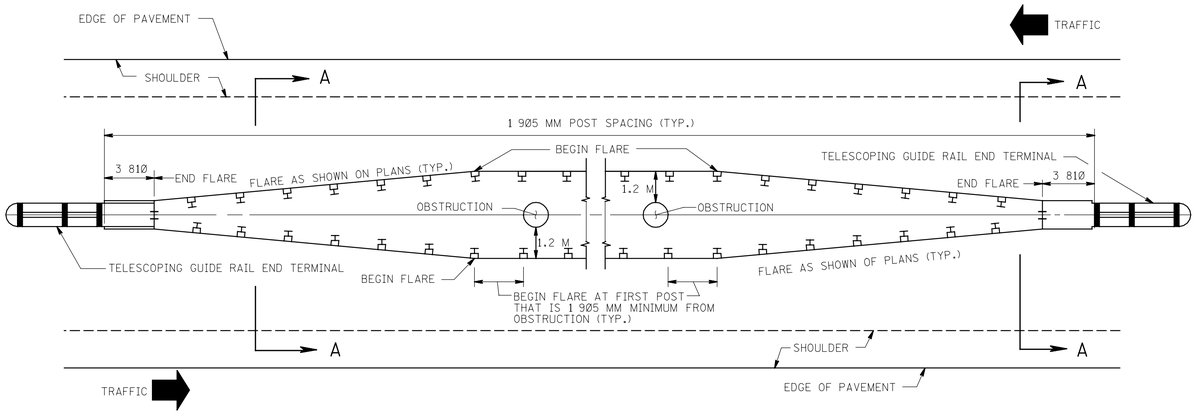

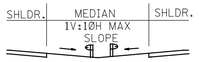

SECTION A-A

NOTE: 1V:10H MAX. SLOPES TO BEGIN 30 METERS IN ADVANCE OF GUIDE RAIL TERMINALS.

CD-612-7.1

MEDIAN GUIDE RAIL WHEN CLEARANCE FROM BACK OF RAIL TO OBSTRUCTION IS MORE THAN 0.6 M BUT LESS THAN 1.2 M

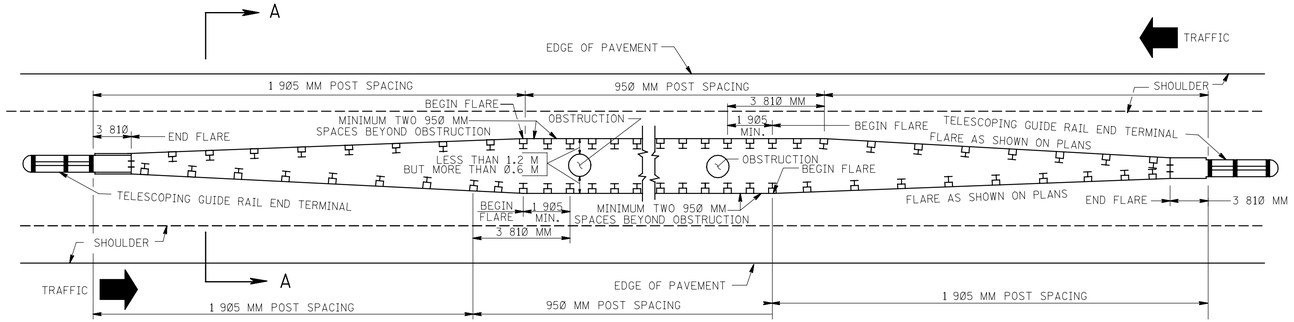

CD-612-7.2

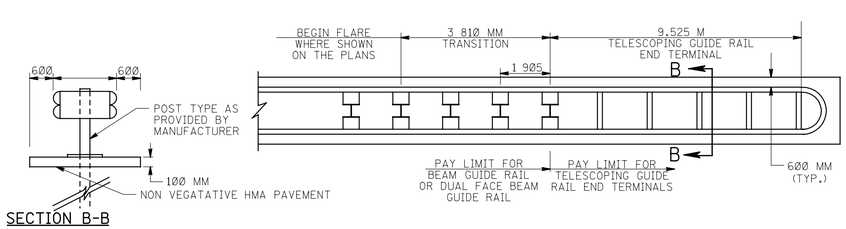

NOTE • 3 810 MM OR 1 905 MM TRANSITION AS RECOMMENDED BY THE MANUFACTURER-GUIDE RAIL SHALL NOT BEGIN TO FLARE WITHIN 3 810 MM OF TELESCOPING GUIDE RAIL END TREATMENT.

TELESCOPING GUIDE RAIL END TERMINALS

CD-612-7.3

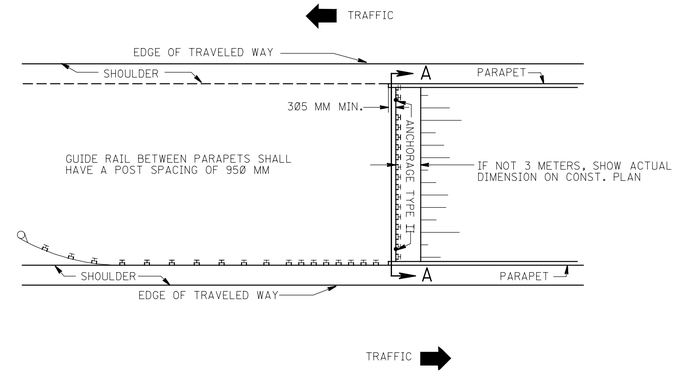

SECTION A-A

MEDIAN GUIDE RAIL TREATMENT AT ADJACENT BRIDGES

CD-612-7.4

NOTE: ALL DIMENSIONS SHOWN ON THIS SHEET ARE IN MILLIMETERS UNLESS OTHERWISE NOTED.

MEDIAN GUIDE RAIL TREATMENT

HMA = HOT MIX ASPHALT

N.T.S.

CD-612-7

NEW JERSEY DEPARTMENT OF TRANSPORTATION

CONSTRUCTION DETAILS

BDC01D-4 - ORIGINAL SHEET

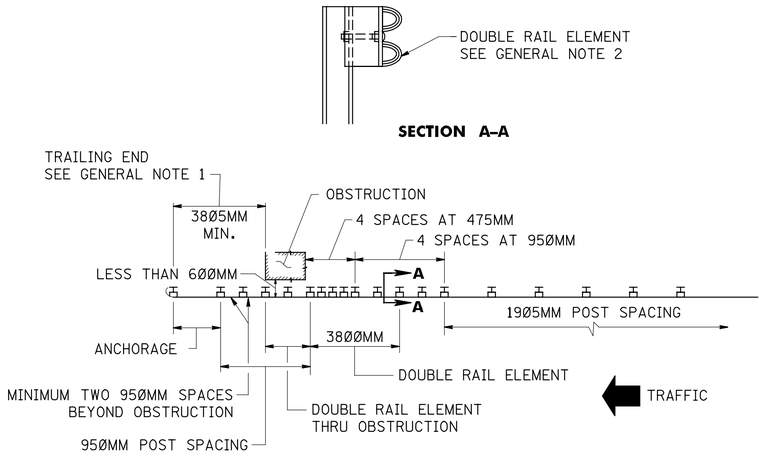

WHERE CLEARANCE FROM BACK OF RAIL TO OBSTRUCTION IS LESS THAN 600MM

CD–612–8.1

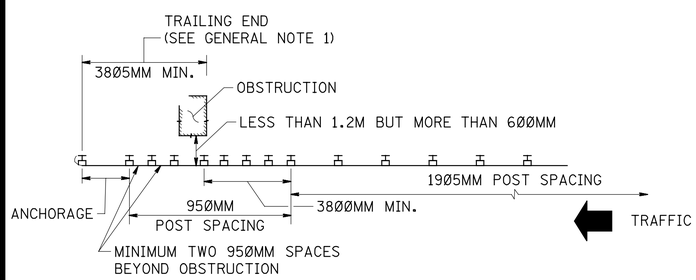

WHERE CLEARANCE FROM BACK OF RAIL TO OBSTRUCTION IS MORE THAN 600MM BUT LESS THAN 1.2M

CD–612–8.2

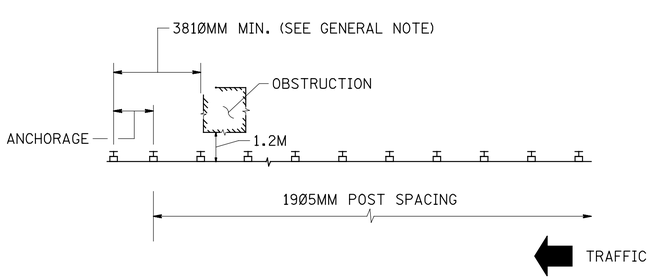

WHERE CLEARANCE FROM BACK OF RAIL TO OBSTRUCTION IS 1.2M OR GREATER

CD–612–8.3

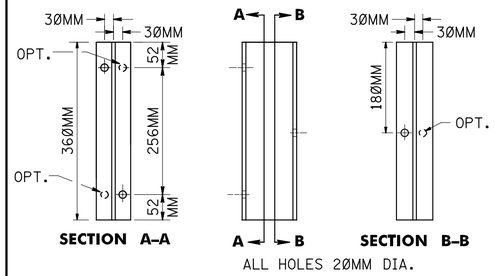

360MM SPACER

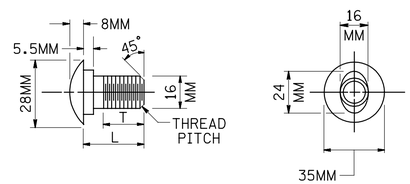

M16 x 2 BUTTON HEAD BOLT

TYPE	L	MIN. THREAD LENGTH
SPLICE	35MM	30MM
RAIL	50MM	45MM

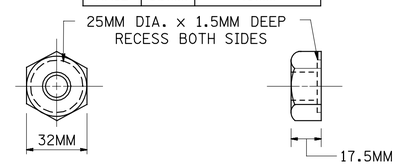

M16 x 2 DIA. RECESS NUT

SPLICE & RAIL NUT & BOLT

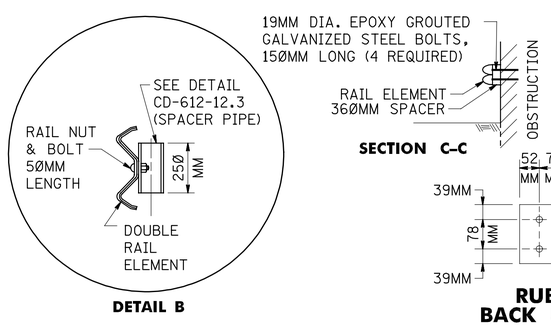

RUB RAIL BACK UP PLATE

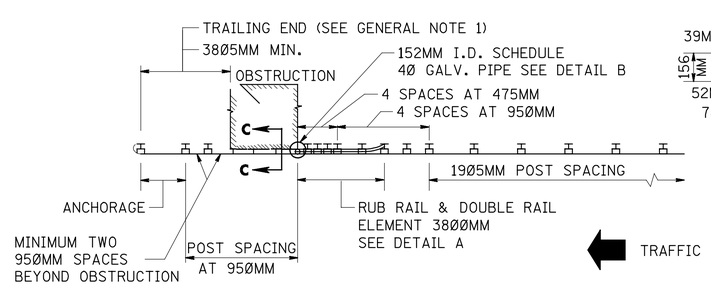

WHERE RAIL ELEMENT WITH SPACER IS ATTACHED TO OBSTRUCTION

CD–612–8.7

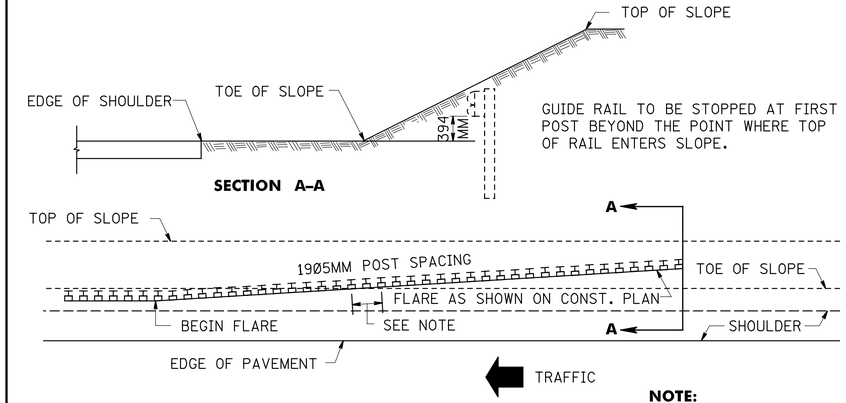

NOTE:
USE BEAM GUIDE RAIL IN LINE ANCHORAGE WHERE SHOWN ON THE PLANS.

GUIDE RAIL FOR CUTS (END BURIED IN SLOPE)

CD–612–8.4

IF LESS THAN 600MM

SLOPES	ADDITIONAL POST LENGTH MILLIMETERS
FLATTER THAN 1V:6H	NO CHANGE
1V:6H TO 1V:4H	305MM
1V:3H TO 1V:2H	610MM
STEEPER THAN 1V:2H	1220MM

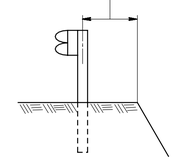

ADDITIONAL LENGTH BEAM GUIDE RAIL POSTS

CD–612–8.5

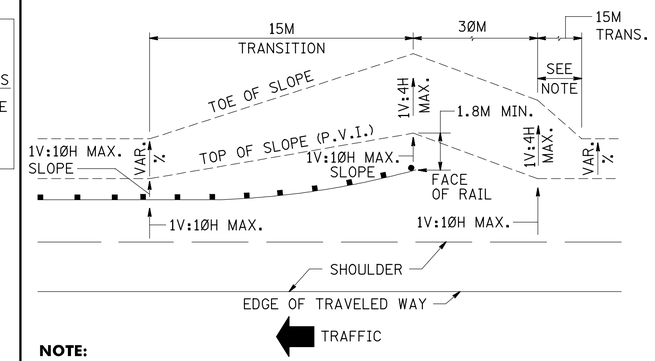

NOTE:
THIS TRANSITION IS ONLY NEEDED IF THE APPROACHING SLOPE IS STEEPER THAN 1V:4H.

SLOPE TREATMENT AT SLOTTED GUIDE RAIL TERMINALS

CD–612–8.6

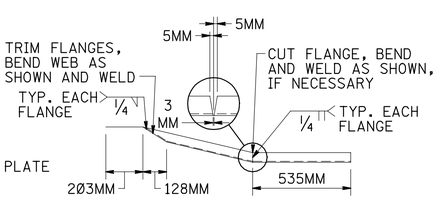

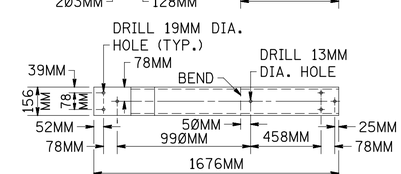

C150 x 12 RUB RAIL (RE–9–73) (MODIFIED) DETAIL

GENERAL NOTES

1. WHERE A CRASHWORTHY END TREATMENT IS SHOWN AT THE TRAILING END ON THE PLANS, THE POST SPACING AND DOUBLE RAIL ELEMENT FOR THE GUIDE RAIL SHALL BE THE SAME AS THE APPROACH END.
2. WHERE DOUBLE RAIL ELEMENT IS REQUIRED, THE ADDITIONAL RAIL ELEMENT SHOULD BE ADDED BEHIND THE CONTINUOUS FRONT RAIL.

CD–612–8.8

BEAM GUIDE RAIL END TREATMENT

N.T.S.

CD–612–8

NEW JERSEY DEPARTMENT OF TRANSPORTATION

CONSTRUCTION DETAILS

BDC01D-4 - ORIGINAL SHEET

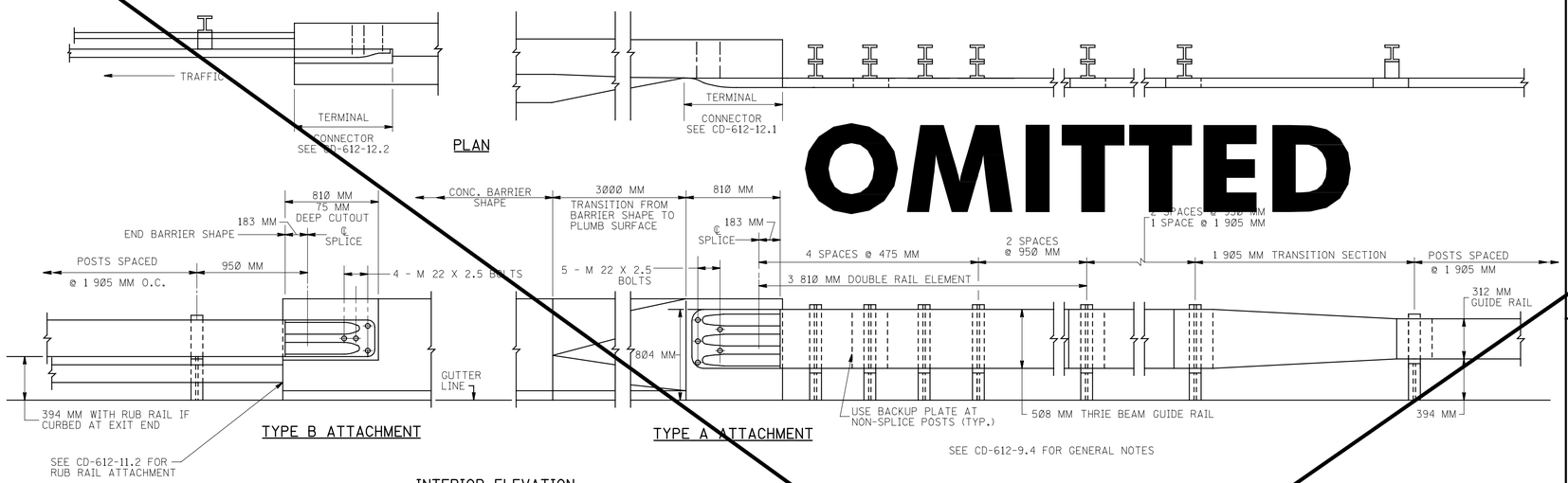

OMITTED

SEE CD-612-9.4 FOR GENERAL NOTES

INTERIOR ELEVATION

GUIDE RAIL ATTACHMENT TO BARRIER

ATTACHMENT OF TERMINAL CONNECTORS TO ABUTMENT FACES, PILSTERS OR PARAPETS ARE SIMILAR TO DETAILS SHOWN. FOR EXISTING PARAPETS OR PILASTERS USE BACKUP PLATES ON THE FAR SIDE ATTACHED BY M 22 X 2.5 BOLTS INSTALLED IN 24 MM DIA. HOLES CORED THROUGH THE CONCRETE.

CD-612-9.1

GENERAL NOTES - BEAM GUIDE RAIL ATTACHMENTS

STRUCTURAL STEEL PLATES AND SHAPES SHALL CONFORM TO ASTM A36M AND SHALL BE GALVANIZED PER ASTM A123.

STEEL BOLTS, NUTS AND WASHERS SHALL CONFORM TO ASTM A307, UNLESS DESIGNATED AS HIGH STRENGTH. HIGH STRENGTH BOLTS, NUTS AND WASHERS SHALL CONFORM TO ASTM A325. HARDWARE SHALL BE GALVANIZED PER ASTM A153.

CONCRETE SHALL BE CLASS B CONCRETE.

REINFORCEMENT SHALL CONFORM TO ASTM A 615, GRADE 60.

HIGH STRENGTH BOLTS FOR BASE PLATE ANCHORAGE SHALL BE FULLY THREADED AND INSTALLED IN CORED HOLES NO GREATER THAN THE BOLT DIAMETER PLUS 6 MM. CARE SHALL BE EXERCISED TO AVOID DAMAGE TO EXISTING REINFORCEMENT AND CONDUITS. MINIMUM EMBEDMENT LENGTH SHALL BE 152 MM. BOLTS SHALL BE EPOXY GROUTED IN PLACE PER MANUFACTURER'S RECOMMENDATIONS TO ATTAIN A MINIMUM PULLOUT STRENGTH OF 107 KILONEWTONS AT THE CONSTRUCTION SITE AS CERTIFIED BY THE CONTRACTOR.

HIGH STRENGTH BOLTS FOR BASE PLATE ANCHORAGE MAY BE CAST IN PLACE IN FRESH CONCRETE WITH A MINIMUM EMBEDMENT LENGTH OF 508 MM.

CD-612-9.4

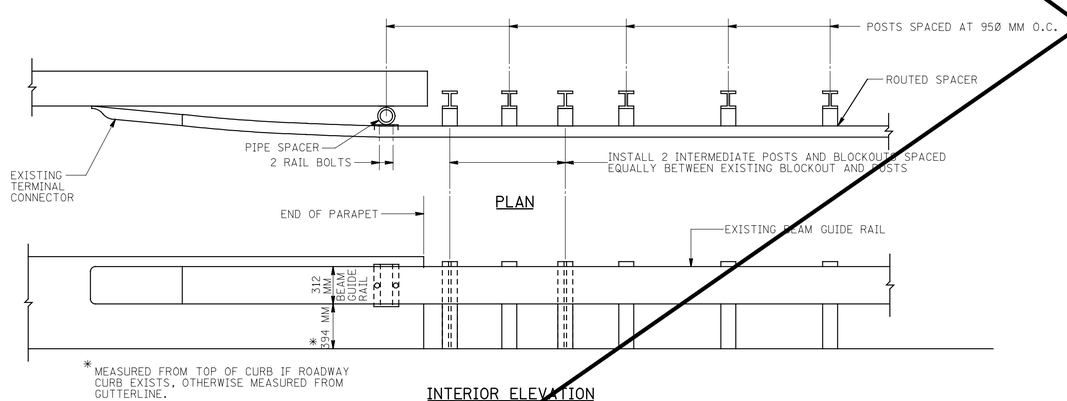

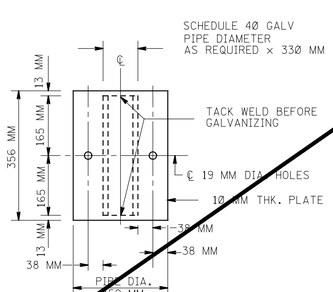

PIPE SPACER

CD-612-9.2

MODIFICATION OF GUIDE RAIL ATTACHMENT TO PARAPET

TYPE A - PARAPET SHOWN, BARRIER SIMILAR

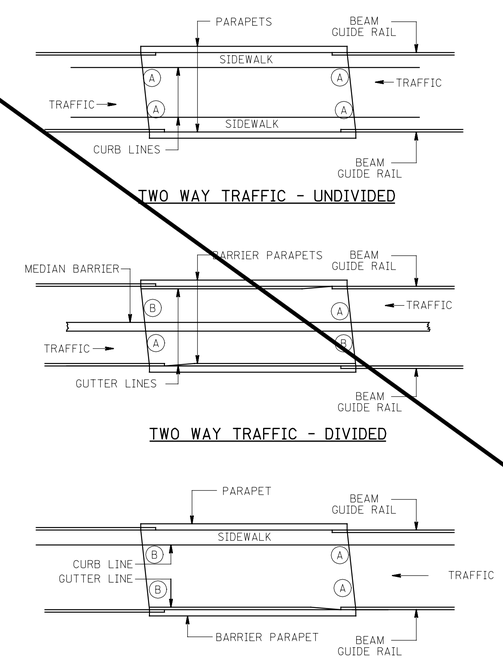

BRIDGE ATTACHMENT TYPES

(A) ATTACHMENT TYPE A
(B) ATTACHMENT TYPE B
SEE CD-612-9.1

CD-612-9.3

BEAM GUIDE RAIL ATTACHMENTS

N.T.S.

CD-612-9

NEW JERSEY DEPARTMENT OF TRANSPORTATION

CONSTRUCTION DETAILS

BDC03D-04 - THIS SHEET IS OMITTED
BDC01D-4 - ORIGINAL SHEET

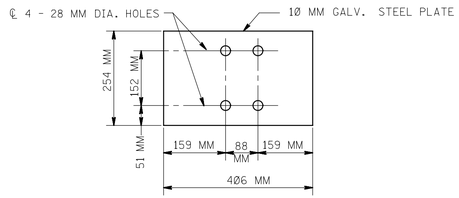

MOUNTING PLATE

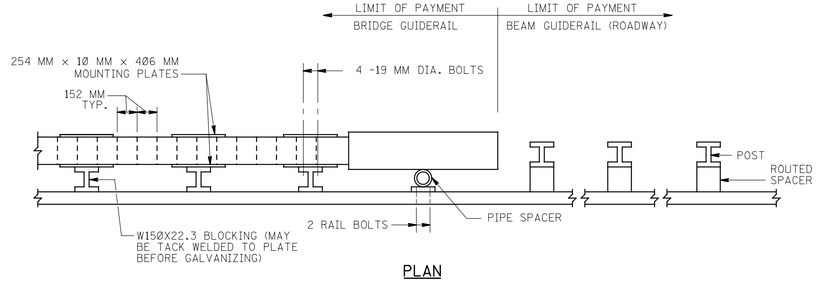

PLAN

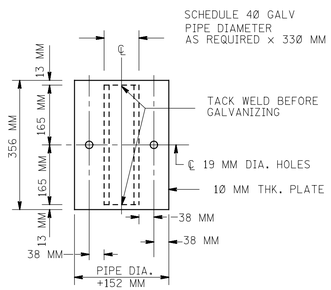

PIPE SPACER

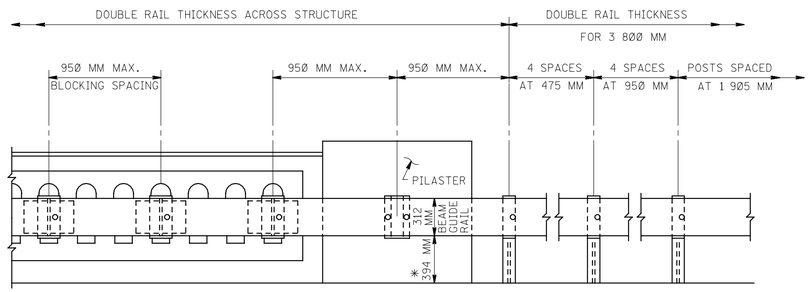

* MEASURED FROM TOP OF CURB IF ROADWAY CURB EXISTS, OTHERWISE MEASURED FROM GUTTERLINE.

ELEVATION

SEE CD-612-9.4 FOR GENERAL NOTES

GUIDE RAIL ATTACHMENT TO BALUSTRADE

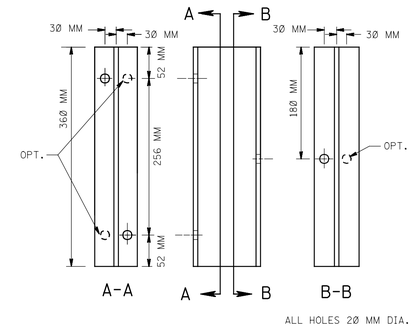

ALL HOLES 20 MM DIA.

360 MM SPACER

W150X13.5 STRUCTURAL SHAPE

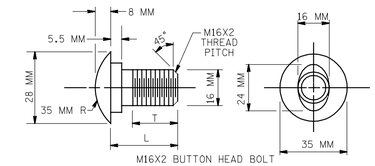

M16X2 BUTTON HEAD BOLT

TYPE	L	MIN. THREAD LENGTH
SPLICE	35 MM	30 MM
RAIL	50 MM	45 MM

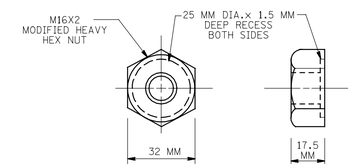

M16X2 RECESS NUT

SPLICE & RAIL NUT & BOLT

CD-612-10.1

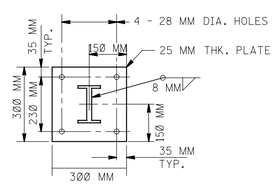

BASE PLATE

SEE CD-612-9.4 FOR GENERAL NOTES

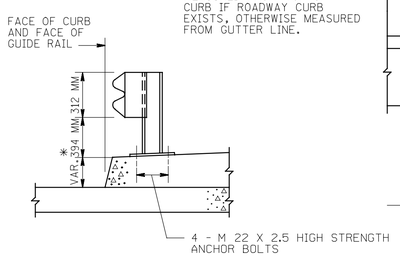

* MEASURED FROM TOP OF CURB IF ROADWAY CURB EXISTS, OTHERWISE MEASURED FROM GUTTER LINE.

SECTION

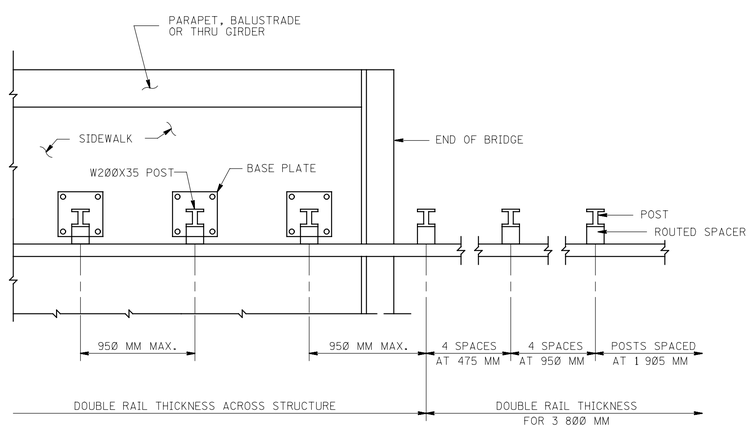

PLAN

GUIDE RAIL ATTACHMENT TO SIDEWALK

CD-612-10.2

NOTE: ALL DIMENSIONS SHOWN ON THIS SHEET ARE IN MILLIMETERS UNLESS OTHERWISE NOTED.

BEAM GUIDE RAIL ATTACHMENTS

N.T.S.

CD-612-10

NEW JERSEY DEPARTMENT OF TRANSPORTATION

CONSTRUCTION DETAILS

BDC01D-4 - ORIGINAL SHEET

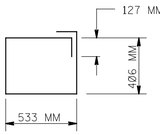

STIRRUP

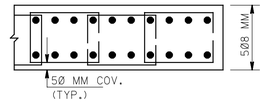

SECTION A-A

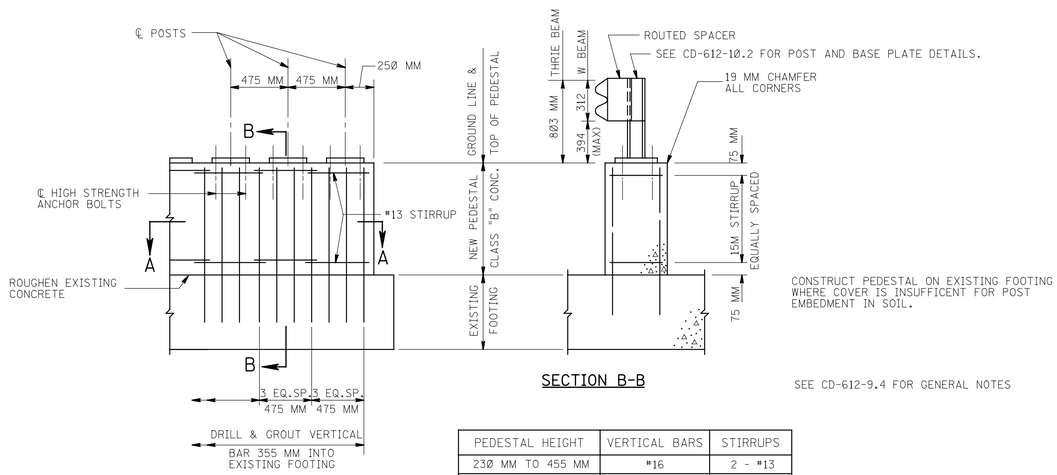

SECTION B-B

SEE CD-612-9.4 FOR GENERAL NOTES

PEDESTAL HEIGHT	VERTICAL BARS	STIRRUPS
230 MM TO 455 MM	#16	2 - #13
480 MM TO 760 MM	#16	3 - #13
785 MM TO 1065 MM	#16	4 - #13
1090 MM TO 1220 MM	#16	5 - #13

GUIDE RAIL ATTACHMENT TO FOOTING

CD-612-11.1

BEAM GUIDE RAIL ATTACHMENTS

N.T.S.

CD-612-11

NEW JERSEY DEPARTMENT OF TRANSPORTATION

CONSTRUCTION DETAILS

NOTE: ALL DIMENSIONS SHOWN ON THIS SHEET ARE IN MILLIMETERS UNLESS OTHERWISE NOTED.

BDC01D-4 - ORIGINAL SHEET

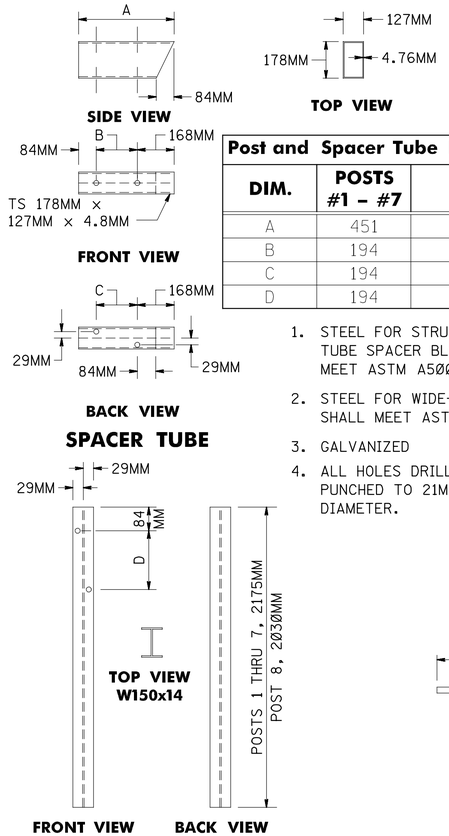

Post and Spacer Tube Dim. (MM)		
DIM.	POSTS #1 – #7	POST #8
A	451	352
B	194	95
C	194	95
D	194	95

1. STEEL FOR STRUCTURAL TUBE SPACER BLOCKS SHALL MEET ASTM A500 GRADE B.
2. STEEL FOR WIDE-FLANGE SHALL MEET ASTM A36.
3. GALVANIZED
4. ALL HOLES DRILLED OR PUNCHED TO 21MM DIAMETER.

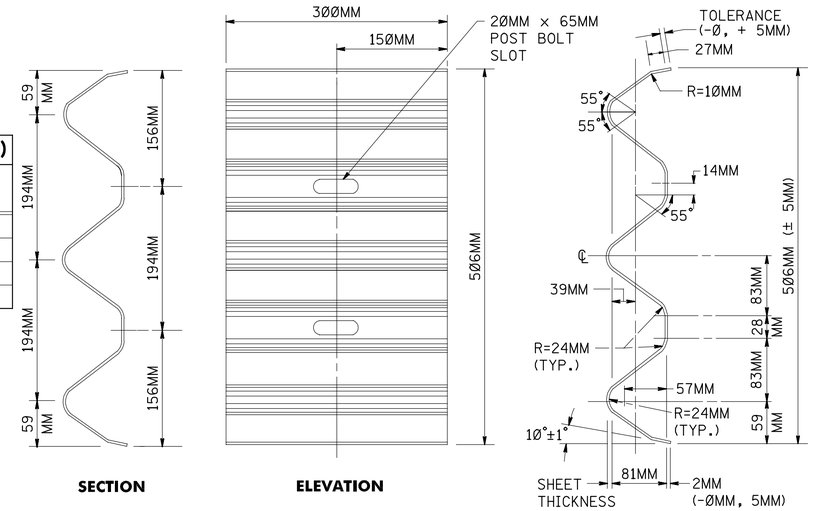

(AASHTO M180, CLASS A, TYPE 1)

BACKUP PLATE AT NON SPLICE POSTS

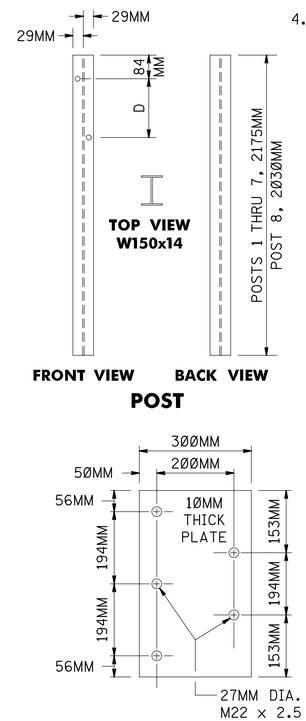

BACKUP PLATE FOR TERMINAL CONNECTOR

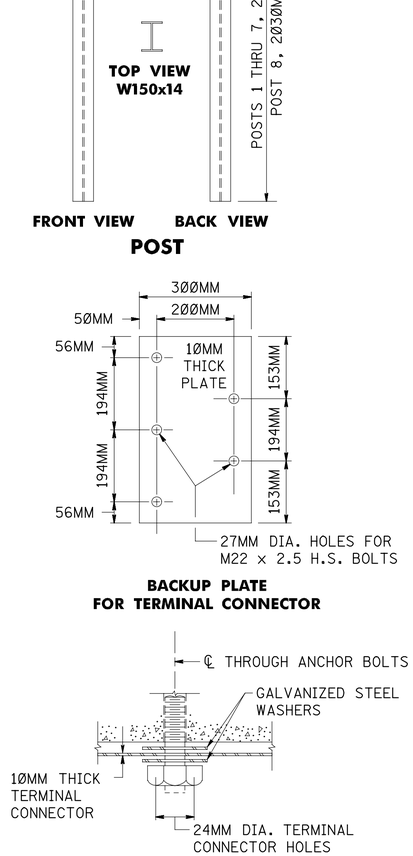

TERMINAL ANCHORAGE

SEE CD-612-9.4 FOR GENERAL NOTES

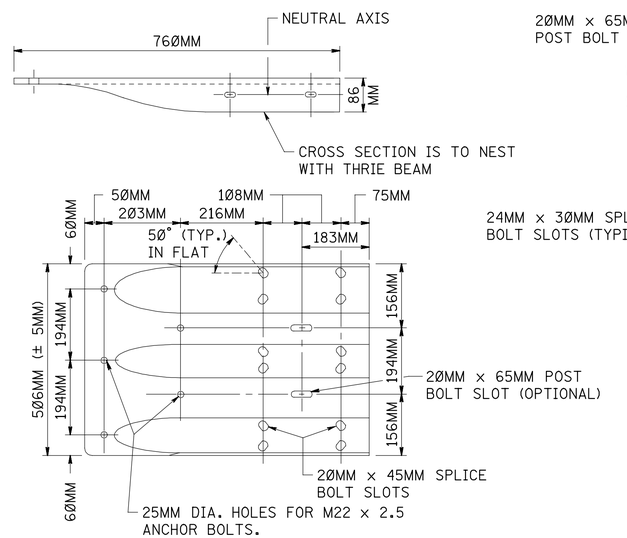

(AASHTO M180, CLASS B, TYPE 1)

TERMINAL CONNECTOR

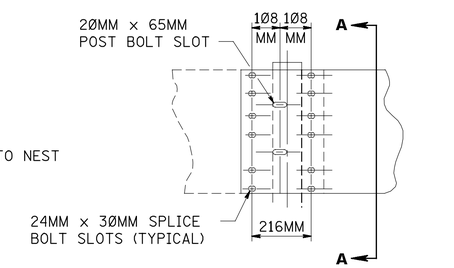

(AASHTO M180, CLASS A, TYPE 1)

ELEVATION
THRIE BEAM SPLICE

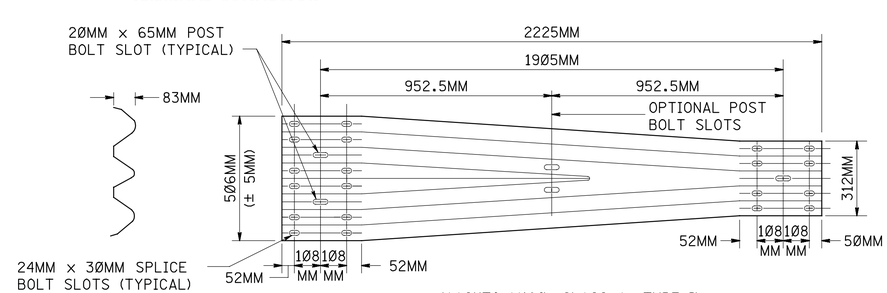

(AASHTO M180, CLASS A, TYPE I)

THRIE BEAM DETAILS

W – THRIE BEAM TRANSITION SECTION

CD–612–12.1

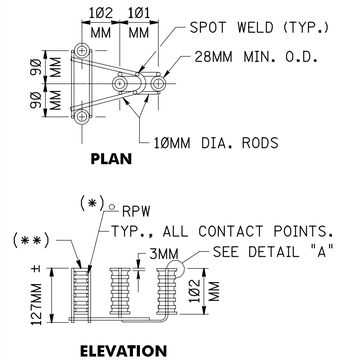

NOTES:

(*) EACH WELDED ATTACHMENT OF WIRE TO FERRULE SHALL DEVELOP THE TENSILE STRENGTH OF THE WIRE.

(**) THREADED STEEL INSERT WITH SOLID BOTTOM TAPPED TO A MINIMUM THREADED DEPTH OF 65MM FOR USE WITH M22 - 9 x 65MM GALVANIZED H.S. HEX BOLT & A 24MM I.D., 57MM O.D., 4MM THICK, TYPE A, PLAIN WASHER.

FOUR (4) BOLTS AND FOUR (4) WASHERS TO BE PROVIDED WITH EACH ASSEMBLY.

WIRES SHOWN ARE MINIMUM ALLOWABLE SIZE AND SHALL CONFORM TO THE REQUIREMENT OF ASTM A510, GRADE 1030 AND HAVE A MINIMUM TENSILE STRENGTH OF 690 KILOPASCALS.

FERRULES SHALL BE MADE OF STEEL MEETING THE REQUIREMENTS OF ASTM A108, GRADE 12L14. INSERTS SHALL BE TAPPED TO THE DIMENSIONAL REQUIREMENTS SPECIFIED IN ASTM A563 FOR NUTS RECEIVING GALVANIZED BOLTS.

BOLTS SHALL CONFORM TO THE REQUIREMENTS OF ASTM A325 OR A449 AND SHALL BE THREADED FULL LENGTH. WASHERS SHALL BE MADE OF STEEL AND SHALL MEET THE DIMENSIONAL REQUIREMENTS OF ASTM B272 TYPE A PLAIN WASHERS. BOTH SHALL BE GALVANIZED IN ACCORDANCE WITH ASTM A153.

WIRE DIAMETERS, MATERIALS REQUIREMENTS, FERRULE MATERIALS REQUIREMENTS AND EXTERNAL DIAMETERS MAY BE ALTERED PROVIDED MANUFACTURER DEMONSTRATES REVISED DESIGN IS EQUIVALENT TO THE DESIGN SHOWN IN THIS STANDARD.

DIMENSIONAL TOLERANCE NOT SHOWN OR IMPLIED ARE INTENDED TO BE THOSE CONSISTENT WITH THE PROPER FUNCTIONING OF THE PART, INCLUDING ITS APPEARANCE, AND ACCEPTED MANUFACTURING PRACTICE.

SEE CD-612-12.1 FOR TERMINAL ANCHORAGE

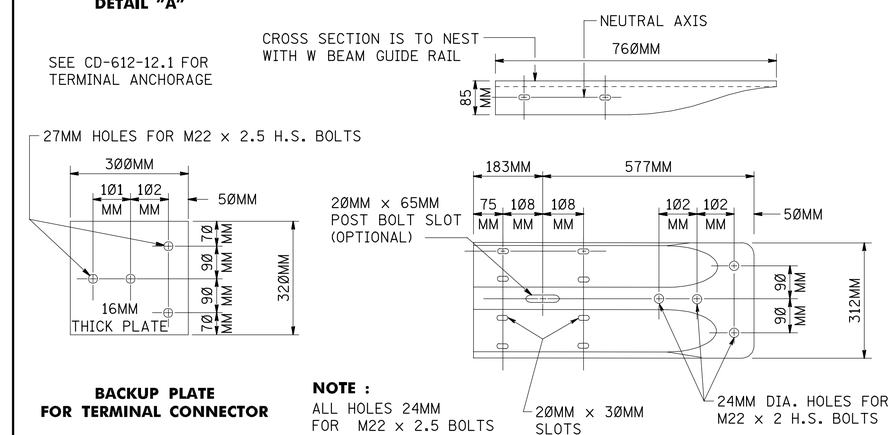

BACKUP PLATE FOR TERMINAL CONNECTOR

NOTE :
ALL HOLES 24MM FOR M22 x 2.5 BOLTS

(AASHTO M180, CLASS B, TYPE 1)

TERMINAL CONNECTOR

SEE CD-612-9.4 FOR GENERAL NOTES

W BEAM DETAILS

CD–612–12.2

THRIE BEAM AND W BEAM TERMINAL CONNECTOR

N.T.S.

CD–612–12

NEW JERSEY DEPARTMENT OF TRANSPORTATION

CONSTRUCTION DETAILS

BDC01D-4 ORIGINAL SHEET

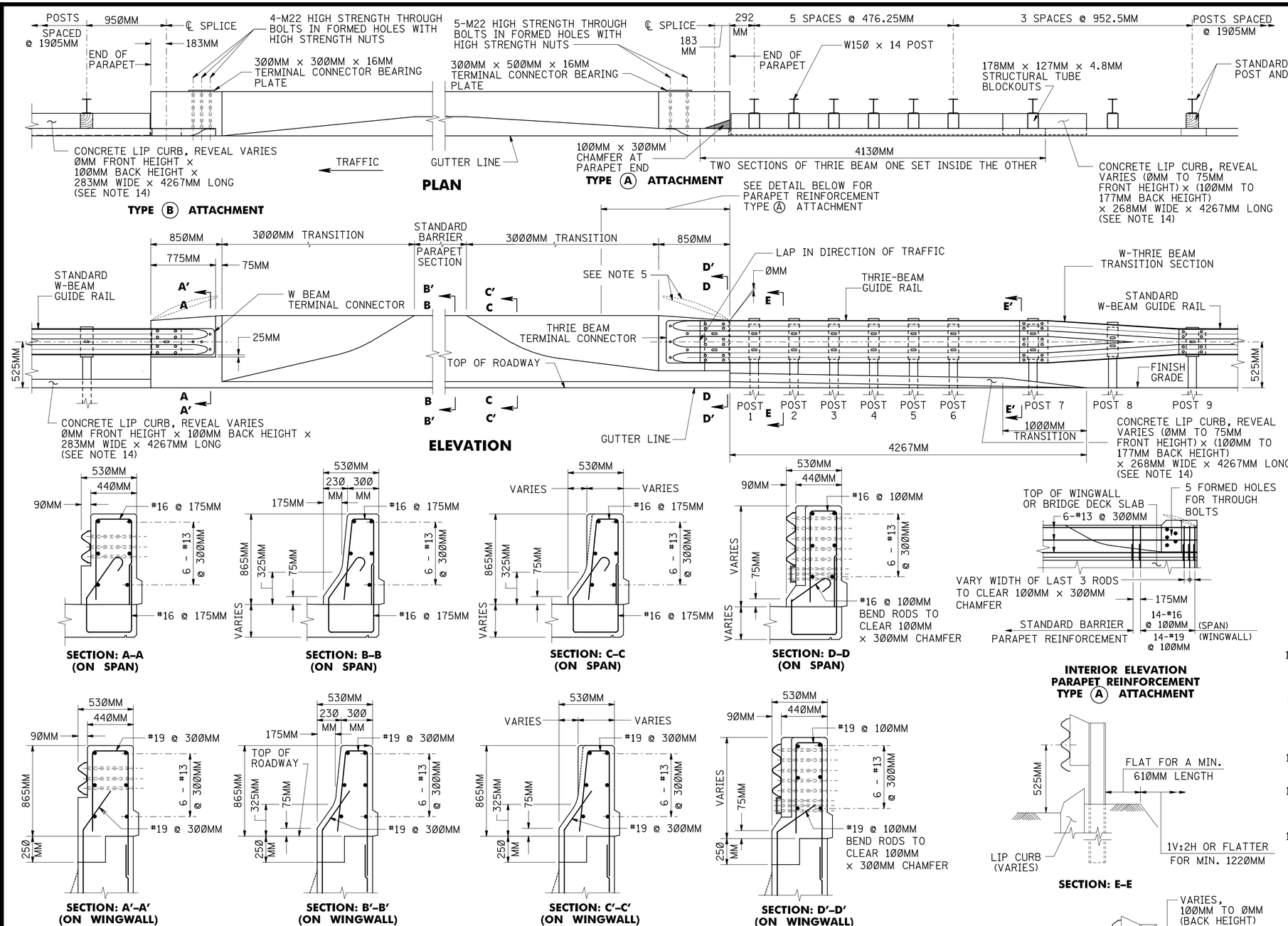

BRIDGE ATTACHMENT TYPES

NOTES:

1. THIS GUIDE RAIL TRANSITION IS APPROPRIATE FOR CONNECTION TO A VERTICAL CONCRETE SHAPE AND SHOULD NOT BE CONNECTED DIRECTLY TO A CONCRETE SAFETY SHAPE. CONCRETE SAFETY BARRIER SHOULD BE TRANSITIONED TO A VERTICAL SHAPE AT THE GUIDE RAIL CONNECTION.
2. FOR RECOMMENDED ATTACHMENT, REFER TO "BRIDGE ATTACHMENT TYPES", THIS SHEET.
3. ALL CROSS SLOPES BETWEEN THE PAVEMENT EDGE AND POSTS SHALL BE 1V:10H OR FLATTER.
4. EMBANKMENT MATERIAL CONFORMING TO THE NJDOT STANDARD SPECIFICATIONS SECTION 203 SHALL EXTEND FLAT BEHIND THE POSTS AT LEAST 610MM AT WHICH POINT A SLOPE OF NO STEEPER THAN 1V:2H SHOULD EXTEND A MINIMUM OF 1220MM FURTHER.
5. BARRIER PARAPET END MAY HAVE TO BE RECONFIGURED TO ACCEPT DIFFERENT TYPES OF RAILING OR FENCING THAT MAY BE MOUNTED ON TOP OF THE PARAPET.
6. AT TYPE (A) ATTACHMENTS, THRIE BEAM RAIL ELEMENT WILL REQUIRE ADDITIONAL POST MOUNTING HOLES FOR POST #1, #3 AND #5. CAUTION, HOLES ARE TO BE SHOP PUNCHED OR DRILLED BEFORE GALVANIZATION. NO FIELD DRILLING IS PERMITTED.
7. POSTS 1 THRU 7 SHALL BE 2175MM LONG WITH 1470MM POST EMBEDMENT. POST 8 SHALL BE 2035MM LONG WITH 1378MM POST EMBEDMENT. POST 9 SHALL BE 2035MM LONG WITH 1330MM POST EMBEDMENT.
8. LOCATE CONDUIT AT END OF BARRIER PARAPETS SO AS NOT TO INTERFERE WITH GUIDE RAIL POST SPACING.
9. LOCATE DRAINAGE INLETS AND ELECTRICAL JUNCTION BOXES ON APPROACHES SO AS TO NOT INTERFERE WITH GUIDE RAIL POST SPACING.
10. STRUCTURAL STEEL PLATES AND SHAPES SHALL CONFORM TO AASHTO M270M AND SHALL BE GALAVANIZED PER AASHTO M111M.
11. HIGH STRENGTH STEEL BOLTS, NUTS AND WASHERS SHALL CONFORM TO AASHTO M164M. ZINC COATED BOLTS, NUTS AND WASHERS SHALL BE TREATED ACCORDING TO AASHTO M232M.
12. THE THICKNESS OF THRIE-BEAM, W-BEAM AND W-THRIE BEAM TRANSITION SHALL BE 2.75MM.
13. FOR ADDITIONAL THRIE BEAM AND W-BEAM DETAILS REFER TO CD-605-1.9, CD-612-1, CD-612-3, AND CD-612-12.
14. CONCRETE LIP CURB MAY BE OMITTED AT UNDERPASS, WHERE EROSION CONTROL IS NOT NECESSARY.

BEAM GUIDE RAIL ATTACHMENTS

N.T.S.

CD-612-13

NEW JERSEY DEPARTMENT OF TRANSPORTATION

CONSTRUCTION DETAILS

GUIDE RAIL ATTACHMENT - NEW CONSTRUCTION
NEW JERSEY BARRIER SHAPE PARAPET (NO ROADWAY CURBING ON APPROACH)

CD-612-13.1

BDC03D-04 - ADDITION OF NOTE NO. 14
BDC01D-4 - ORIGINAL SHEET

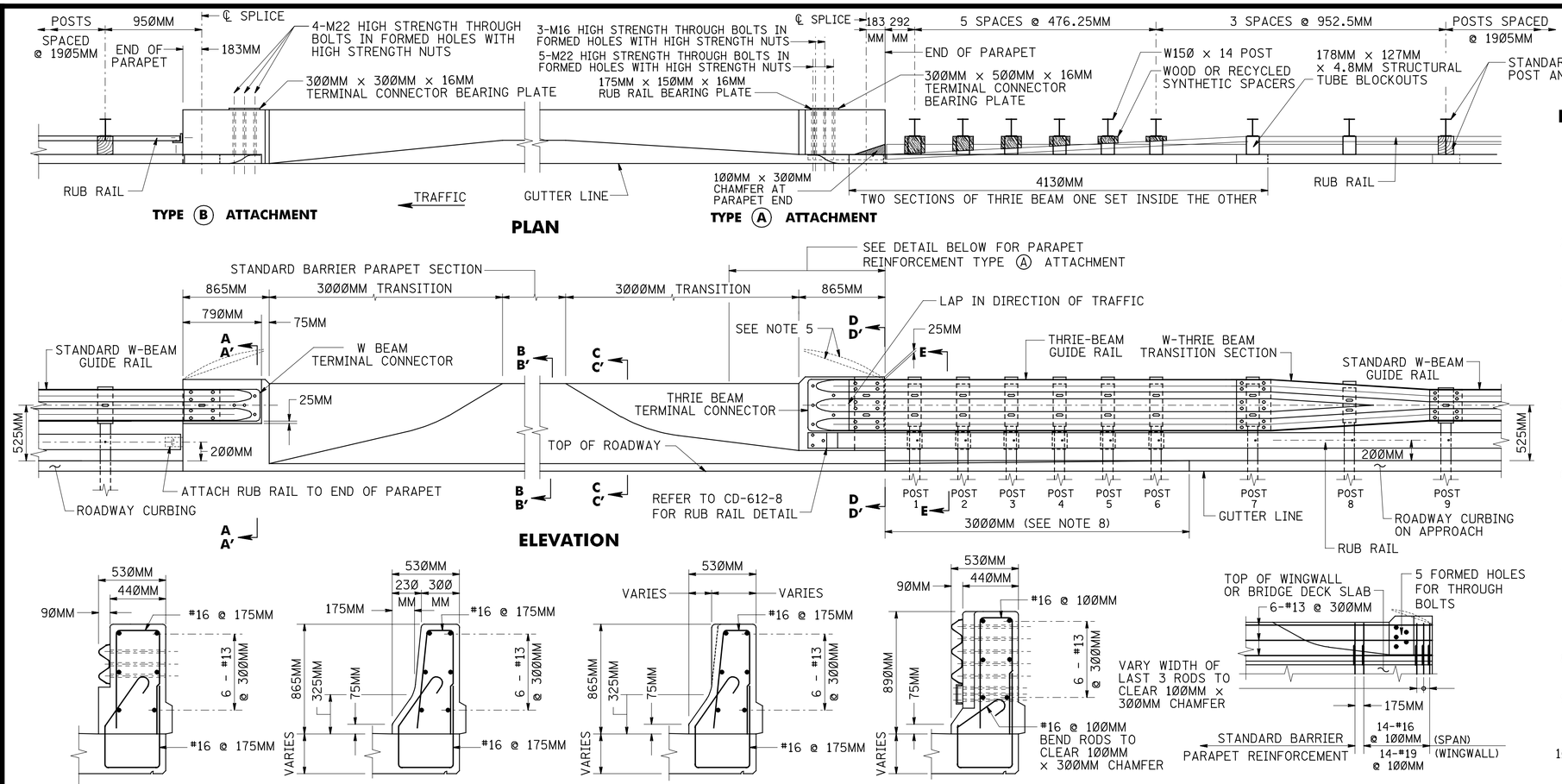

PLAN

ELEVATION

SECTION: A–A (ON SPAN)

SECTION: B–B (ON SPAN)

SECTION: C–C (ON SPAN)

SECTION: D–D (ON SPAN)

INTERIOR ELEVATION PARAPET REINFORCEMENT TYPE (A) ATTACHMENT

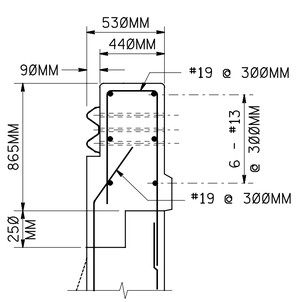

SECTION: A'–A' (ON WINGWALL)

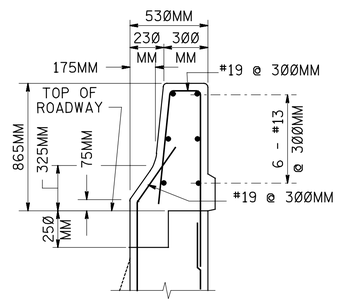

SECTION: B'–B' (ON WINGWALL)

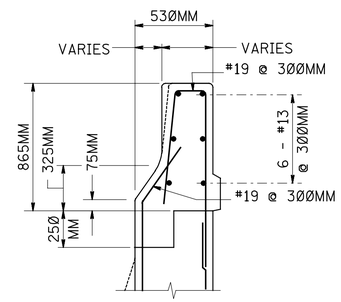

SECTION: C'–C' (ON WINGWALL)

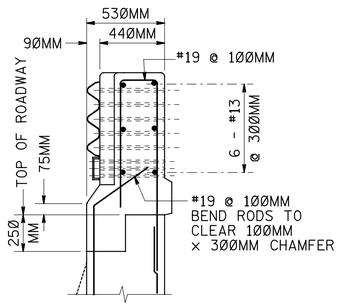

SECTION: D'–D' (ON WINGWALL)

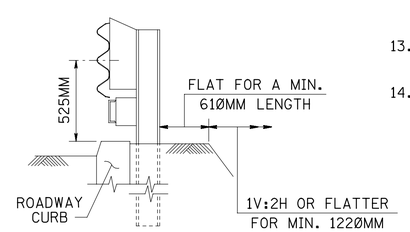

SECTION: E–E

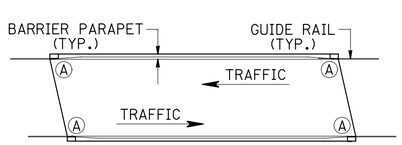

TWO WAY TRAFFIC – UNDIVIDED

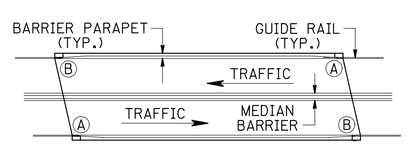

TWO WAY TRAFFIC – DIVIDED

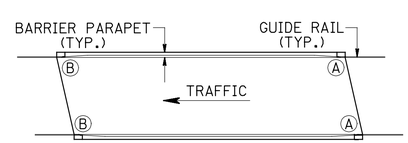

ONE WAY TRAFFIC

BRIDGE ATTACHMENT TYPES

NOTES:

1. THIS GUIDE RAIL TRANSITION IS APPROPRIATE FOR CONNECTION TO A VERTICAL CONCRETE SHAPE AND SHOULD NOT BE CONNECTED DIRECTLY TO A CONCRETE SAFETY SHAPE. CONCRETE SAFETY BARRIER SHOULD BE TRANSITIONED TO A VERTICAL SHAPE AT THE GUIDE RAIL CONNECTION.
2. FOR RECOMMENDED ATTACHMENT, REFER TO "BRIDGE ATTACHMENT TYPES", THIS SHEET.
3. ALL CROSS SLOPES BETWEEN THE PAVEMENT EDGE AND POSTS SHALL BE 1V:10H OR FLATTER.
4. EMBANKMENT MATERIAL CONFORMING TO THE NJDOT STANDARD SPECIFICATIONS SECTION 203 SHALL EXTEND FLAT BEHIND THE POSTS AT LEAST 610MM AT WHICH POINT A SLOPE OF NO STEEPER THAN 1V:2H SHOULD EXTEND A MINIMUM OF 1220MM FURTHER.
5. BARRIER PARAPET END MAY HAVE TO BE RECONFIGURED TO ACCEPT DIFFERENT TYPES OF RAILING OR FENCING THAT MAY BE MOUNTED ON TOP OF THE PARAPET.
6. AT TYPE (A) ATTACHMENTS, THRIE BEAM RAIL ELEMENT WILL REQUIRE ADDITIONAL POST MOUNTING HOLES FOR POST #1, #3 AND #5. CAUTION, HOLES ARE TO BE SHOP PUNCHED OR DRILLED BEFORE GALVANIZATION. NO FIELD DRILLING IS PERMITTED.
7. POSTS 1 THRU 7 SHALL BE 2175MM LONG WITH 1470MM POST EMBEDMENT. POST 8 SHALL BE 2035MM LONG WITH 1378MM POST EMBEDMENT. POST 9 SHALL BE 2035MM LONG WITH 1330MM POST EMBEDMENT.
8. TRANSITION LAST 3000MM OF ROADWAY CURBING TO MATCH BARRIER PARAPET SHAPE.
9. LOCATE CONDUIT AT END OF BARRIER PARAPETS SO AS NOT TO INTERFERE WITH GUIDE RAIL POST SPACING.
10. LOCATE DRAINAGE INLETS AND ELECTRICAL JUNCTION BOXES ON APPROACHES SO AS NOT TO INTERFERE WITH GUIDE RAIL POST SPACING.
11. STRUCTURAL STEEL PLATES AND SHAPES SHALL CONFORM TO AASHTO M270M AND SHALL BE GALAVANIZED PER ASTM A123.
12. HIGH STRENGTH STEEL BOLTS, NUTS AND WASHERS SHALL CONFORM TO AASHTO M164M. ZINC COATED BOLTS, NUTS AND WASHERS SHALL BE TREATED ACCORDING TO AASHTO M232M.
13. THE THICKNESS OF THRIE-BEAM, W-BEAM AND W-THRIE BEAM TRANSITION SHALL BE 2.75MM.
14. FOR ADDITIONAL THRIE BEAM AND W-BEAM DETAILS REFER TO CD-605-1.9, CD-612-1, CD-612-3, AND CD-612-12.

BEAM GUIDE RAIL ATTACHMENTS

N.T.S.

CD–612–14

NEW JERSEY DEPARTMENT OF TRANSPORTATION

CONSTRUCTION DETAILS

GUIDE RAIL ATTACHMENT – NEW CONSTRUCTION
NEW JERSEY BARRIER SHAPE PARAPET (WITH ROADWAY CURBING ON APPROACH)

CD–612–14.1

BDCOID-4 – ORIGINAL SHEET

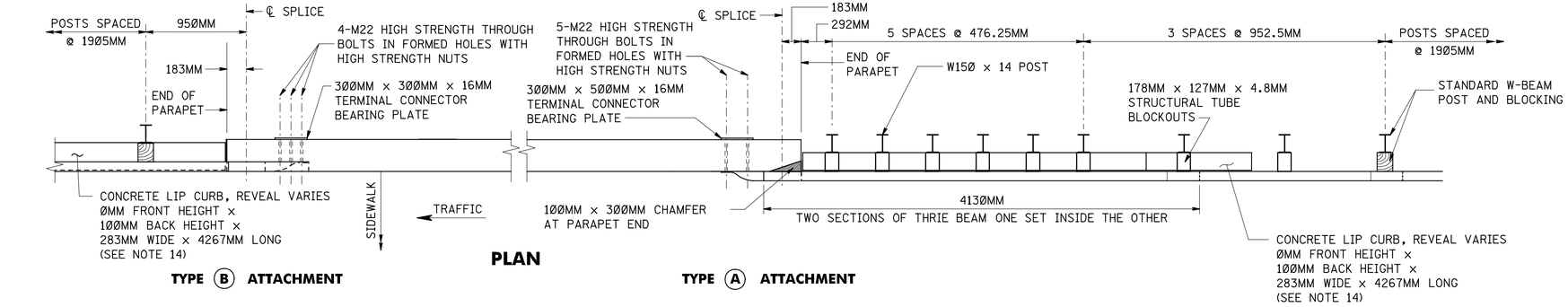

PLAN

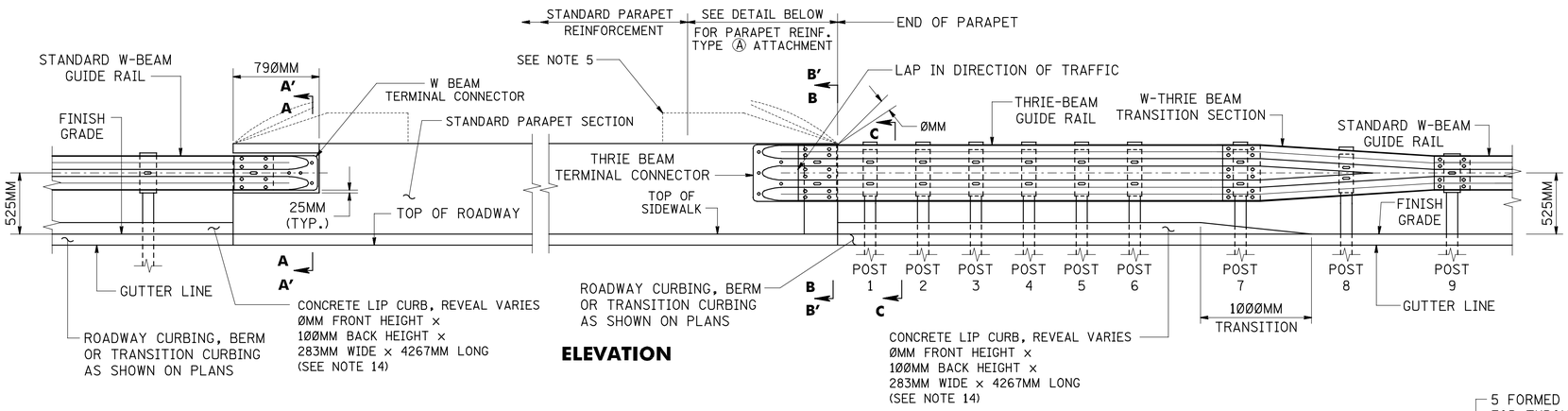

ELEVATION

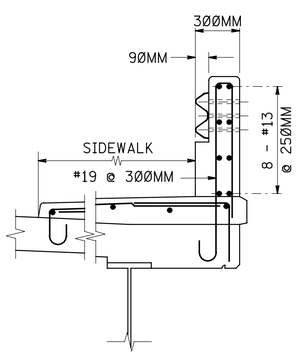

SECTION: A–A (ON SPAN)

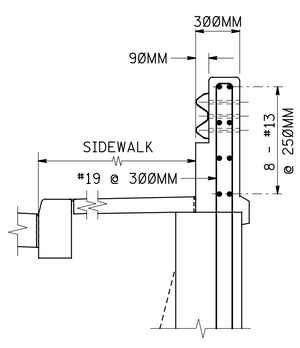

SECTION: A'–A' (ON WINGWALL)

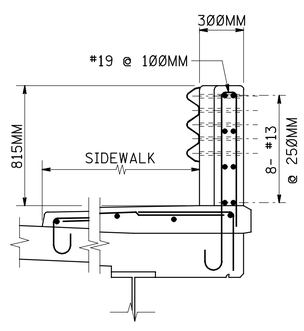

SECTION: B–B (ON SPAN)

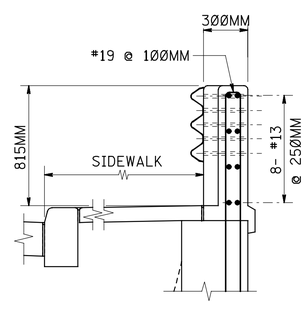

SECTION: B'–B' (ON WINGWALL)

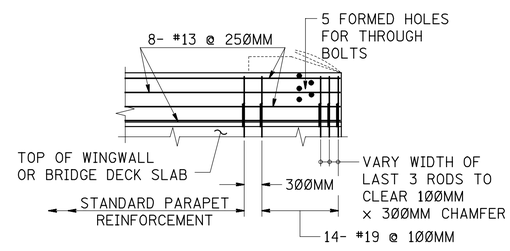

INTERIOR ELEVATION PARAPET REINFORCEMENT TYPE (A) ATTACHMENT

GUIDE RAIL ATTACHMENT – NEW CONSTRUCTION

(SIDEWALK WITH PARAPET)

NOTES:

1. THIS GUIDE RAIL TRANSITION IS APPROPRIATE FOR CONNECTION TO A VERTICAL CONCRETE SHAPE.
2. FOR RECOMMENDED ATTACHMENT TYPE, REFER TO "BRIDGE ATTACHMENT TYPES", THIS SHEET.
3. ALL CROSS SLOPES BETWEEN THE PAVEMENT EDGE AND POSTS SHALL BE 1V:10H OR FLATTER.
4. EMBANKMENT MATERIAL CONFORMING TO THE NJDOT STANDARD SPECIFICATIONS SECTION 203 SHALL EXTEND FLAT BEHIND THE POSTS AT LEAST 610MM AT WHICH POINT A SLOPE OF NO STEEPER THAN 1V:2H SHOULD EXTEND A MINIMUM OF 1220MM FURTHER.
5. WHEN RAILING IS INSTALLED ON TOP OF PARAPET, PARAPET END SHALL BE MODIFIED TO ACCOMODATE HORIZONTAL RAIL ATTACHMENT TO PARAPET. REFER TO STANDARD RAILING PLATE FOR ATTACHMENT DETAILS.
6. AT TYPE (A) ATTACHMENTS, THRIE BEAM RAIL ELEMENT WILL REQUIRE ADDITIONAL POST MOUNTING HOLES FOR POST #1, 3 & 5. CAUTION, HOLES ARE TO BE SHOP PUNCHED OR DRILLED BEFORE GALVANIZATION. NO FIELD DRILLING IS PERMITTED.
7. POSTS 1 THRU 7 SHALL BE 2175MM LONG WITH 1470MM POST EMBEDMENT. POST 8 SHALL BE 2035MM LONG WITH 1378MM POST EMBEDMENT. POST 9 SHALL BE 2035MM LONG WITH 1330MM POST EMBEDMENT.
8. LOCATE CONDUIT AT END OF PYLON SO AS NOT TO INTERFERE WITH GUIDE RAIL POST SPACING.
9. LOCATE DRAINAGE INLETS AND ELECTRIC JUNCTION BOXES ON APPROACHES SO AS NOT TO INTERFERE WITH GUIDE RAIL POST SPACING.
10. STRUCTURAL STEEL PLATES AND SHAPES SHALL CONFORM TO AASHTO M270M AND SHALL BE GALVANIZED AS PER AASHTO M111M.
11. HIGH STRENGTH STEEL BOLTS, NUTS AND WASHERS SHALL CONFORM TO AASHTO M164M. ZINC COATED BOLTS, NUTS AND WASHERS SHALL BE TREATED ACCORDING TO AASHTO M232M.
12. THE THICKNESS OF THRIE-BEAM, W-BEAM AND W-THRIE BEAM TRANSITION SHALL BE 2.75MM.
13. FOR ADDITIONAL THRIE BEAM AND W-BEAM DETAILS REFER TO CD-605-1.9, CD-612-1, CD-612-3, AND CD-612-12.
14. CONCRETE LIP CURB MAY BE OMITTED AT UNDERPASS, WHERE EROSION CONTROL IS NOT NECESSARY.

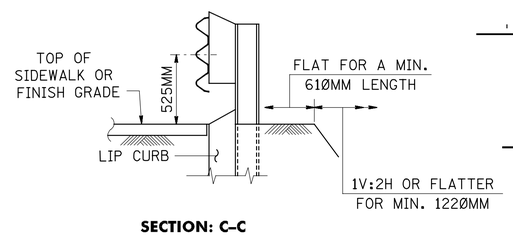

SECTION: C–C

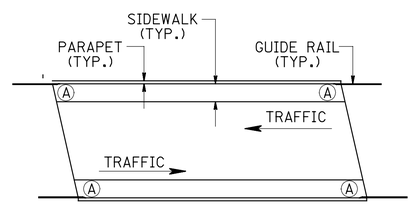

TWO WAY TRAFFIC – UNDIVIDED

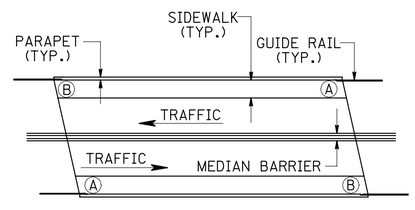

TWO WAY TRAFFIC – DIVIDED

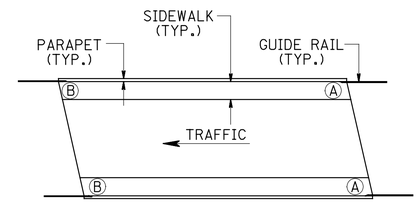

ONE WAY TRAFFIC

BRIDGE ATTACHMENT TYPES

BEAM GUIDE RAIL ATTACHMENTS

N.T.S.

CD-612-15

NEW JERSEY DEPARTMENT OF TRANSPORTATION

CONSTRUCTION DETAILS

CD-612-15.1

BDC03D-04 – ADDITION OF NOTE NO. 14
BDC01D-4 – ORIGINAL SHEET

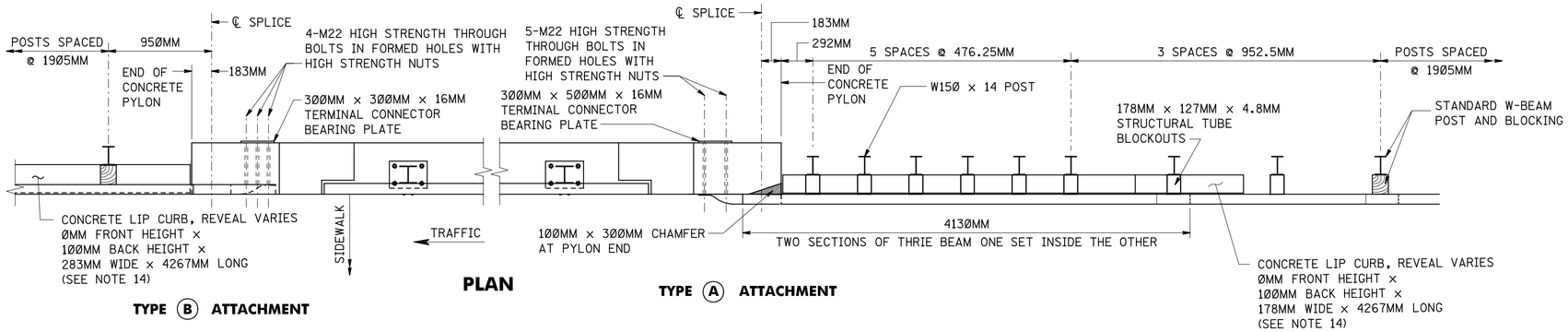

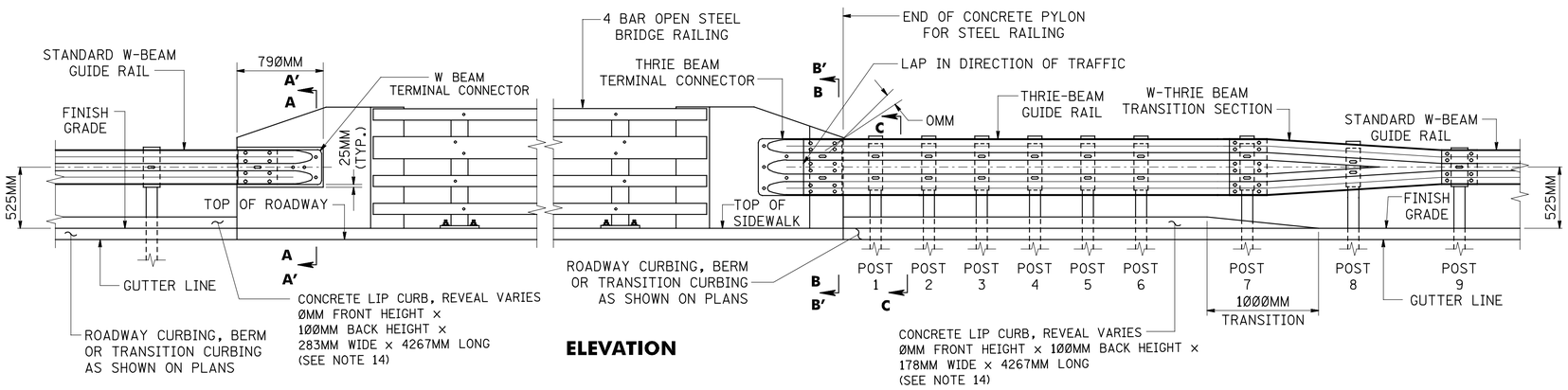

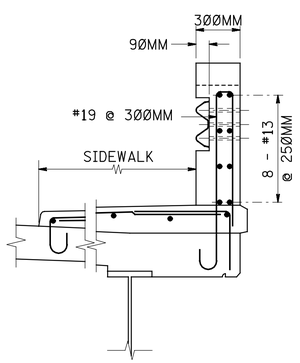

SECTION: A–A
(ON SPAN)

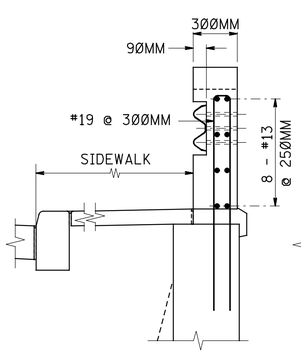

SECTION: A'–A'
(ON WINGWALL)

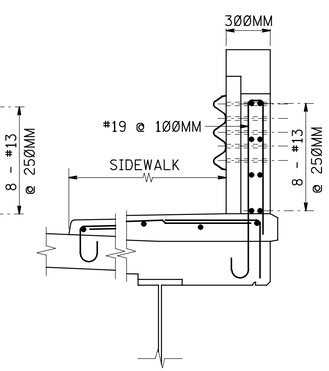

SECTION: B–B
(ON SPAN)

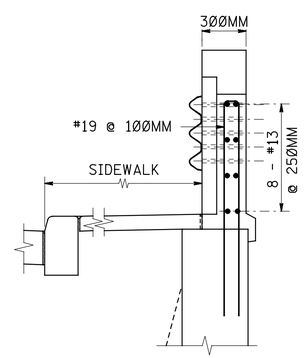

SECTION: B'–B'
(ON WINGWALL)

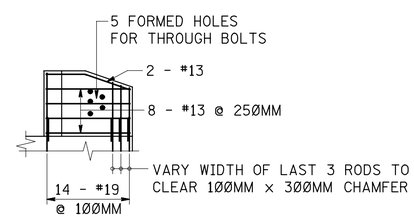

INTERIOR ELEVATION
PYLON REINFORCEMENT
TYPE (A) ATTACHMENT

NOTES:

1. THIS GUIDE RAIL TRANSITION IS APPROPRIATE FOR CONNECTION TO A VERTICAL CONCRETE SHAPE.
2. FOR RECOMMENDED ATTACHMENT TYPE, REFER TO "BRIDGE ATTACHMENT TYPES", THIS SHEET.
3. ALL CROSS SLOPES BETWEEN THE PAVEMENT EDGE AND POSTS SHALL BE 1V:10H OR FLATTER.
4. EMBANKMENT MATERIAL CONFORMING TO THE NJDOT STANDARD SPECIFICATIONS SECTION 203 SHALL EXTEND FLAT BEHIND THE POSTS AT LEAST 610MM AT WHICH POINT A SLOPE OF NO STEEPER THAN 1V:2H SHOULD EXTEND A MINIMUM OF 1220MM FURTHER.
5. CONCRETE PYLONS TO BE CONSTRUCTED AT ALL ENDS OF STEEL RAILING. ATTACH GUIDE RAIL TO THE PYLONS.
6. AT TYPE (A) ATTACHMENTS, THRIE BEAM RAIL ELEMENT WILL REQUIRE ADDITIONAL POST MOUNTING HOLES FOR POST #1, 3 & 5. CAUTION, HOLES ARE TO BE SHOP PUNCHED OR DRILLED BEFORE GALVANIZATION. NO FIELD DRILLING IS PERMITTED.
7. POSTS 1 THRU 7 SHALL BE 2175MM LONG WITH 1470MM POST EMBEDMENT. POST 8 SHALL BE 2035MM LONG WITH 1378MM POST EMBEDMENT. POST 9 SHALL BE 2035MM LONG WITH 1330MM POST EMBEDMENT.
8. LOCATE CONDUIT AT END OF PYLON SO AS NOT TO INTERFERE WITH GUIDE RAIL POST SPACING.
9. LOCATE DRAINAGE INLETS AND ELECTRIC JUNCTION BOXES ON APPROACHES SO AS NOT TO INTERFERE WITH GUIDE RAIL POST SPACING.
10. STRUCTURAL STEEL PLATES AND SHAPES SHALL CONFORM TO AASHTO M270M AND SHALL BE GALVANIZED AS PER AASHTO M111M.
11. HIGH STRENGTH STEEL BOLTS, NUTS AND WASHERS SHALL CONFORM TO AASHTO M164M. ZINC COATED BOLTS, NUTS AND WASHERS SHALL BE TREATED ACCORDING TO AASHTO M232M.
12. THE THICKNESS OF THRIE-BEAM, W-BEAM AND W-THRIE BEAM TRANSITION SHALL BE 2.75MM.
13. FOR ADDITIONAL THRIE BEAM AND W-BEAM DETAILS REFER TO CD-605-1.9, CD-612-1, CD-612-3, AND CD-612-12.
14. CONCRETE LIP CURB MAY BE OMITTED AT UNDERPASS, WHERE EROSION CONTROL IS NOT NECESSARY.

GUIDE RAIL ATTACHMENT – NEW CONSTRUCTION
(SIDEWALK WITH STEEL RAILING)

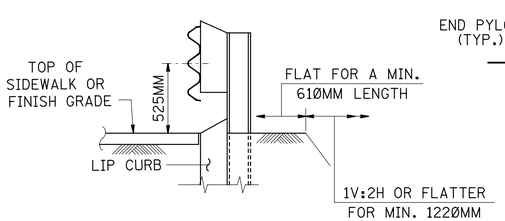

SECTION: C–C

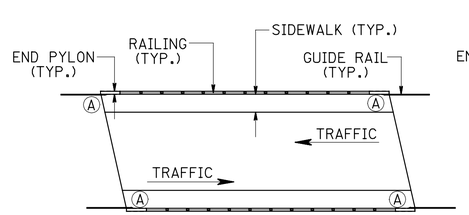

TWO WAY TRAFFIC – UNDIVIDED

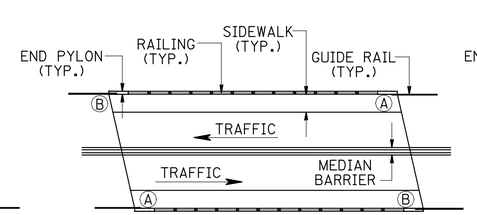

TWO WAY TRAFFIC – DIVIDED

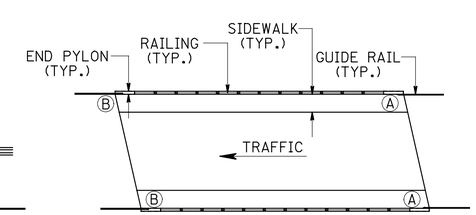

ONE WAY TRAFFIC

BRIDGE ATTACHMENT TYPES

BEAM GUIDE RAIL ATTACHMENTS

N.T.S.

CD–612–16

NEW JERSEY DEPARTMENT OF TRANSPORTATION

CONSTRUCTION DETAILS

CD–612–16.1

BDC03D-04 – ADDITION OF NOTE NO.14
BDC01D-4 – ORIGINAL SHEET

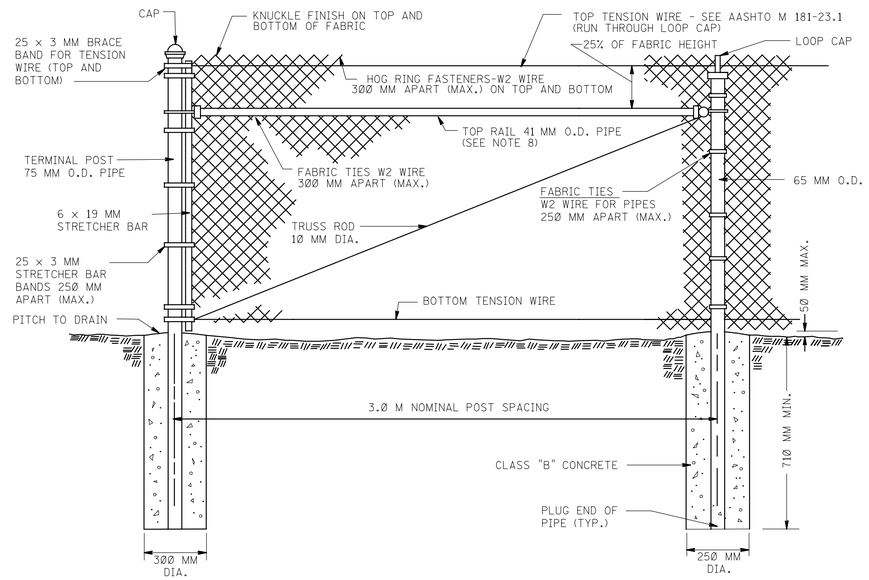

CHAIN-LINK FENCE, ____ M HIGH

CD-614-1.1

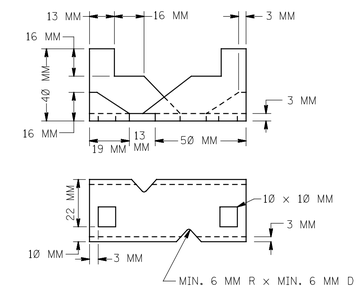

ANCHOR SHOE

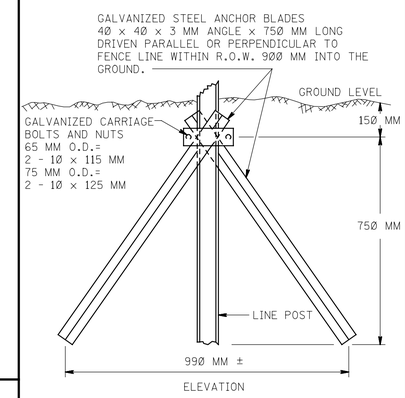

DRIVE ANCHOR SHOE ASSEMBLY

SEE NOTE 7

CD-614-1.2

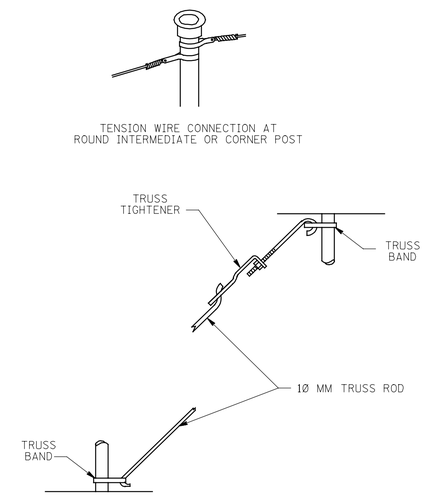

10 MM TRUSS ROD ASSEMBLY

CHAIN-LINK FENCE ASSEMBLIES

CD-614-1.3

NOTES :

1. CHAIN-LINK FENCE FABRIC, POSTS, RAILS, TIES, BANDS, BARS, RODS, AND OTHER FITTINGS AND HARDWARE SHALL CONFORM TO AASHTO M 181 FOR TYPES, GRADES AND CLASSES, AND AS NOTED BELOW.

2. POSTS

	TERMINAL, CORNER AND GATE POSTS 75 MM O.D. PIPE	LINE POSTS 65 MM O.D. PIPE	TOP OR BRACE RAIL 41 MM O.D. PIPE
AASHTO TYPE	I OR II	I OR II	I OR II
AASHTO GRADE	1 OR 2	1 OR 2	1 OR 2
MINIMUM LENGTH OF POST FOR			
1.2 M FABRIC	2.0 M	2.0 M	NA
1.5 M FABRIC	2.3 M	2.3 M	NA
1.8 M FABRIC	2.6 M	2.6 M	NA
ACTUAL OUTSIDE DIAMETER (MM)	73.0	60.3	42.2
WALL THICKNESS (MM)	GRADE 1 = 5.2 GRADE 2 = 4.1	GRADE 1 = 3.9 GRADE 2 = 3.0	GRADE 1 = 3.6 GRADE 2 = 2.8

3. FABRIC:

   TYPE II AND TYPE IV SHALL BE W2 CORE WIRE, 50 MM MESH
   TYPE IV FABRIC SHALL BE CLASS A OR B.
   TYPE IV FABRIC SHALL BE GREY IN COLOR, AND SHALL MATCH FEDERAL STANDARD 595A, COLOR CHIP NO. 26493 (SEMI-GLOSS).
   UNLESS OTHERWISE SPECIFIED IN THE SPECIAL PROVISIONS.

4. THE CENTERLINE OF ALL POSTS SHALL NOT BE LESS THAN 200 MM INSIDE R.O.W.

5. THE DEPTH OF CONCRETE FOOTINGS IN SOLID ROCK MAY BE REDUCED TO 300 MILLIMETERS BELOW THE TOP OF ROCK AND THE DIAMETER OF THE HOLE IN ROCK MAY BE REDUCED TO 90 MM.

6. BRACE BANDS AND STRETCHER BAR BANDS SHALL BE FURNISHED WITH 8 MM DIA. CARRIAGE BOLTS AND ELASTIC STOP NUTS.

7. DRIVE ANCHOR SHOE ASSEMBLY ONLY TO BE USED IN WET AREAS AND WITH PRIOR APPROVAL OF ENGINEER.

8. WHEN THE PLANS INDICATE A TERMINAL OR CORNER POST DESIGNATED TYPE "NR", THE TOP RAIL SHALL BE ELIMINATED FROM THIS SECTION OF FENCE.

CD-614-1.4

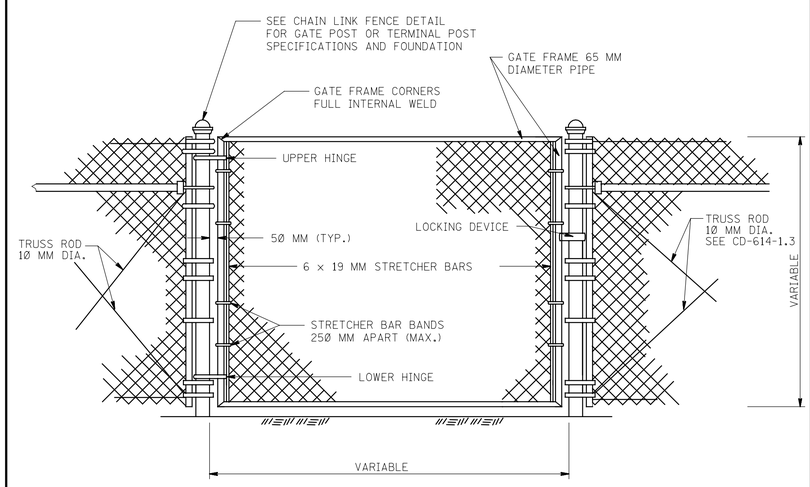

GATES, CHAIN-LINK FENCE, ____ M WIDE

CD-614-1.5

NOTE: ALL DIMENSIONS SHOWN ON THIS SHEET ARE IN MILLIMETERS UNLESS OTHERWISE NOTED.

CHAIN-LINK FENCE

N.T.S.

CD-614-1

NEW JERSEY DEPARTMENT OF TRANSPORTATION

CONSTRUCTION DETAILS

BDC020-01 - CD-614-1.1
BDC010-4 - ORIGINAL SHEET

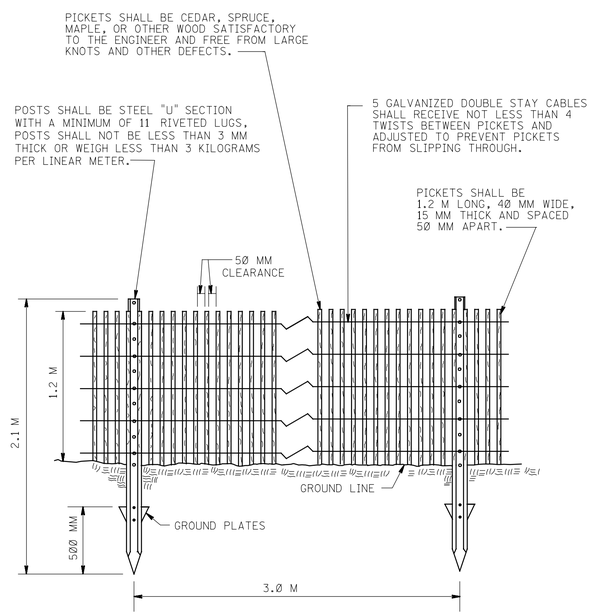

SNOW FENCE

CD-614-2.1

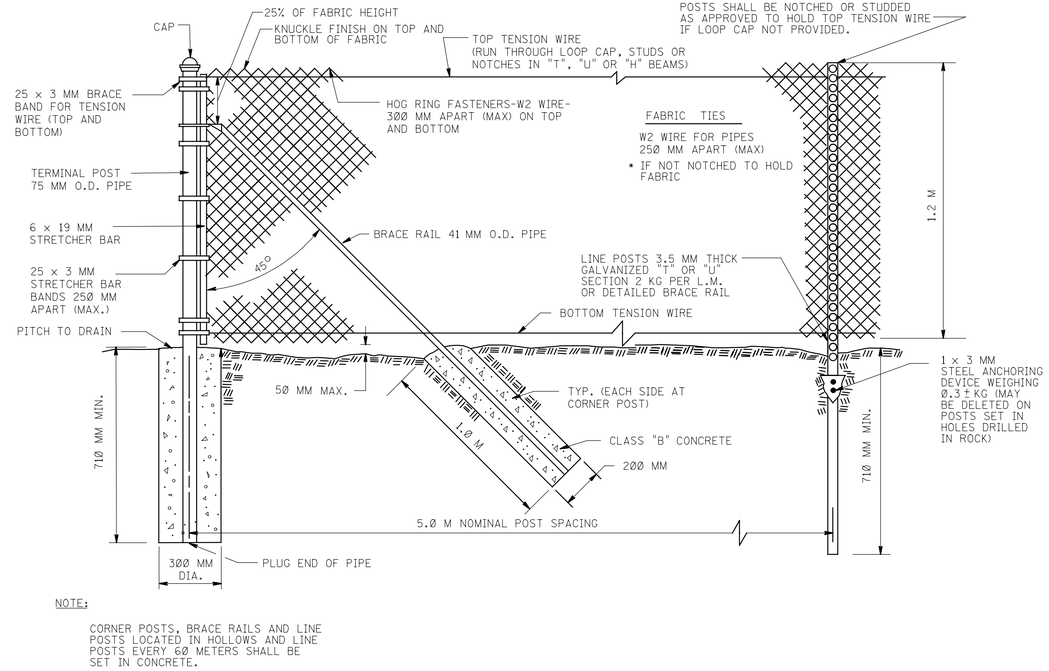

NOTE:

CORNER POSTS, BRACE RAILS AND LINE POSTS LOCATED IN HOLLOWS AND LINE POSTS EVERY 60 METERS SHALL BE SET IN CONCRETE.

CHAIN LINK FARM-TYPE FENCE

CD-614-2.2

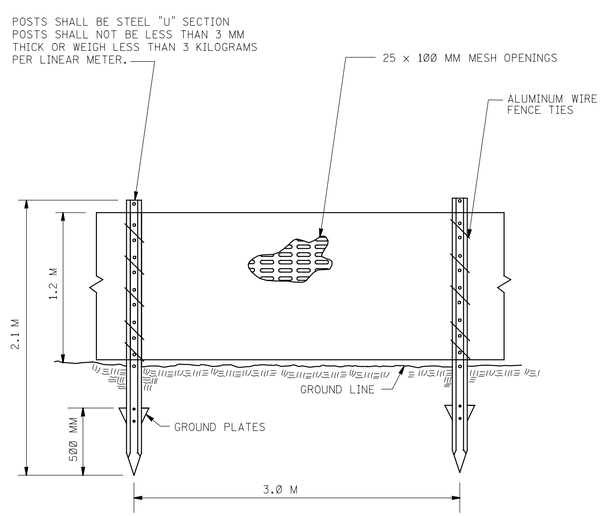

SNOW FENCE, PLASTIC

CD-614-2.3

NOTE: ALL DIMENSIONS SHOWN ON THIS SHEET ARE IN MILLIMETERS UNLESS OTHERWISE NOTED.

CHAIN-LINK AND SNOW FENCE

N.T.S.

CD-614-2

NEW JERSEY DEPARTMENT OF TRANSPORTATION

CONSTRUCTION DETAILS

BDC020-01 - CD-614-2.2
BDC010-4 - ORIGINAL SHEET

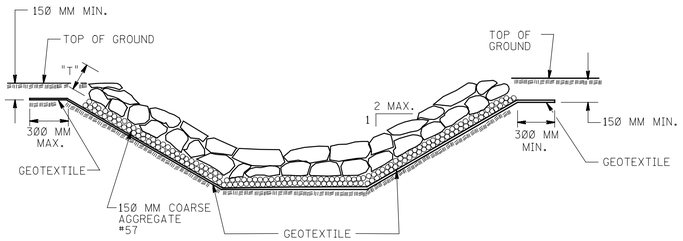

RIPRAP STONE CHANNEL PROTECTION

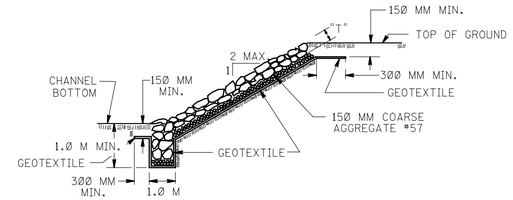

RIPRAP STONE SLOPE PROTECTION

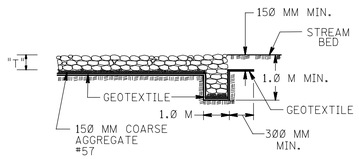

END TREATMENT FOR RIPRAP STONE CHANNEL PROTECTION

NOTE:

FOR WIDTHS AND SLOPES REFER TO CONSTRUCTION PLANS

$"T" = 2d_{50}$

d_{50} = DESIGNATED MEDIAN STONE SIZE, 150 MM MIN.

CD-616-1.1

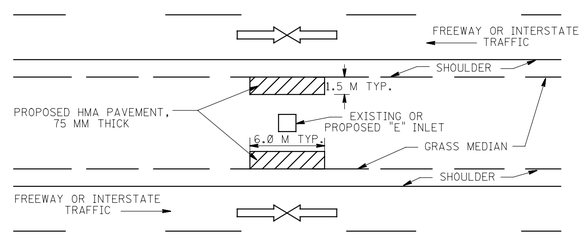

MEDIAN EDGE OF MAINLINE PAVEMENT

NOTES:

1. FOR SLOPES, REFER TO PLANS.
2. WHERE GUIDE RAIL EXISTS AT THE LOW POINT, THE PROPOSED HMA PAVEMENT HAS PREFERENCE OVER NON-VEGETATIVE SURFACE.
3. HMA PAVEMENT SHALL BE THE SAME AS THE SURFACE COURSE. IF THERE IS NO SURFACE COURSE, I-5, WITH 75 MM MINIMUM THICKNESS, SHALL BE USED.
4. IN CUT SECTIONS THE HMA PAVEMENT SHALL BE GRADED TO DRAIN TOWARD THE INLET.
5. THE RIP RAP AND GEOTEXTILE MATERIALS SHALL BE PAID FOR UNDER THE ITEM RIPRAP STONE SLOPE PROTECTION, _____ MM THICK, (D50=_____ MM).

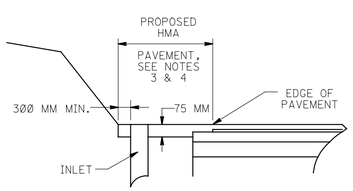

SECTION B-B

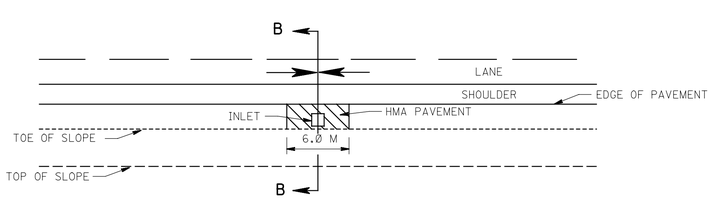

EDGE OF RAMP OR OUTSIDE EDGE OF MAINLINE PAVEMENT IN CUT

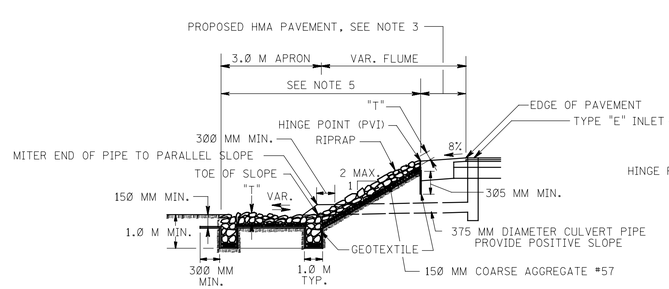

SECTION A-A

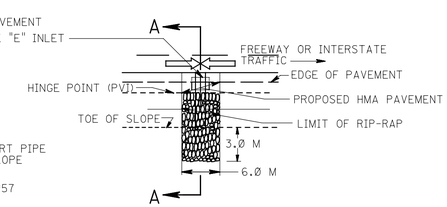

PLAN VIEW

$"T" = 2d_{50}$

d_{50} = DESIGNATED MEDIAN STONE SIZE (200 MM)

EDGE OF RAMP OR OUTSIDE EDGE OF MAINLINE PAVEMENT IN FILL

SLOPE TREATMENT AT LOW POINTS OF UMBRELLA SECTIONS

NOTE: ALL DIMENSIONS SHOWN ON THIS SHEET ARE IN MILLIMETERS UNLESS OTHERWISE NOTED.

CD-616-1.2

SLOPE AND CHANNEL PROTECTION

HMA-HOT MIX ASPHALT

N.T.S.

CD-616-1

NEW JERSEY DEPARTMENT OF TRANSPORTATION

CONSTRUCTION DETAILS

RDC01D-4 - ORIGINAL SHEET

DRUMS SHALL BE MADE OF ORANGE PLASTIC WITH A MINIMUM OF FOUR ALTERNATE FLUORESCENT ORANGE AND SILVER (WHITE) RETROREFLECTIVE STRIPES. IF THERE ARE NON-REFLECTORIZED SPACES BETWEEN THE STRIPES, THEY SHALL BE NO MORE THAN 50 MM WIDE. RETROREFLECTIVE SHEETING FOR STRIPES SHALL CONFORM WITH ASTM D 4956 S2 REQUIREMENTS AND SHALL BE FROM THE APPROVED PRODUCTS LIST MAINTAINED BY THE BUREAU OF QUALITY MANAGEMENT SERVICES, NEW TECHNOLOGIES AND PRODUCTS SECTION.

THE TOP OF THE DRUM SHALL NOT BE OPEN. DRUMS SHALL BE CONSTRUCTED TO INHIBIT ROLLING IF KNOCKED OVER.

THE REFLECTORIZED AREA OF DRUMS SHALL BE ROUND EXCEPT THAT OTHER SHAPES REGARDLESS OF ORENTATION, MAY BE USED IF APPROVED BY THE ENGINEER.

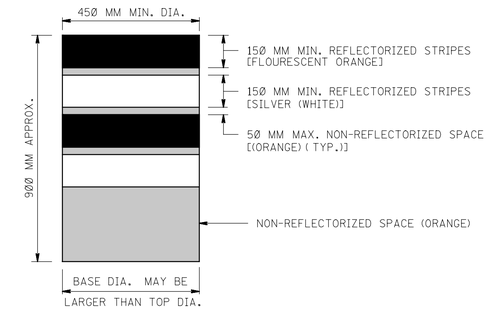

WHEN BALLAST IS REQUIRED BY THE ENGINEER, SAND SHALL BE USED. THE MAXIMUM WEIGHT OF THE BALLAST SHALL BE 23 KG AND BE LOCATED APPROXIMATELY AT GROUND LEVEL. ALTERNATE TYPES OF BALLAST SHALL BE APPROVED BY THE ENGINEER.

DRUMS

CD-617-1.1

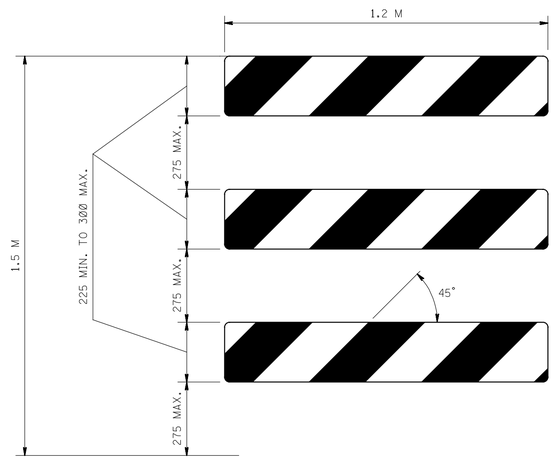

TYPE III BARRICADE - FRONT VIEW

NOTES;

1. THE 225 × 1 200 MM, OR 300 MM MAX. × 1 200 MM BARRICADE RAILS SHALL BE FRABICATED FROM 3 MM MAX. PLASTIC SHEETING AND SHALL BE ATTACHED, 4 PER RAIL, WITH 25 MM NO. 14 PAN HEAD METAL SCREWS OR PLASTIC RIVETS. ALL CORNERS SHALL BE ROUNDED.

2. ORANGE AND SILVER (WHITE) STRIPES SHALL BE RETROREFLECTIVE SHEETING, ASTM D 4956 TYPE III, AS SHOWN FOR CONSTRUCTION SIGNS. ALTERNATE ORANGE AND SILVER (WHITE) STRIPES 150 MM WIDE SLOPING DOWNWARD AT AN ANGLE OF 45 DEGREES IN THE DIRECTION TRAFFIC IS TO PASS.

3. IF NECESSARY, THE SANDBAGS SHALL BE FABRICATED AND PLACED ACCORDING TO THE MANUFACTURE'S RECOMMENDATION.

4. THE FRAMING FOR BARRICADE PANELS SHALL BE NCHRP-350 CRASHED TESTED AND FHWA APPROVED. SEE SPECIFICATION SUBSECTION 617.03.

BREAKAWAY BARRICADES

CD-617-1.3

TRAFFIC CONES SHALL BE PREDOMINATELY ORANGE IN COLOR.

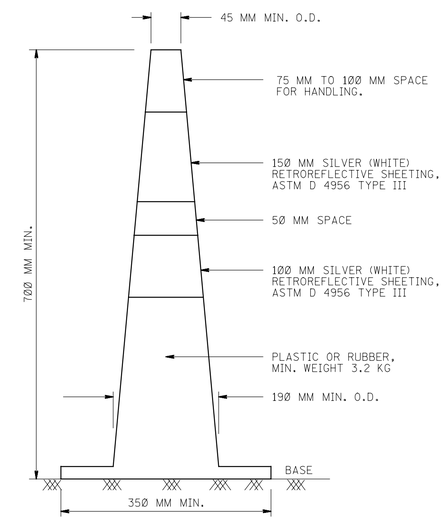

BASES MAY BE OF BREAKAWAY BALLASTED TYPE.

MINOR MANUFACTURER'S VARIATIONS MAY BE ACCEPTABLE UPON APPROVAL OF THE ENGINEER.

TRAFFIC CONES

CD-617-1.2

NOTE: ALL DIMENSIONS SHOWN ON THIS SHEET ARE IN MILLIMETERS UNLESS OTHERWISE NOTED.

TRAFFIC CONTROL DEVICES

N.T.S.

CD-617-1

NEW JERSEY DEPARTMENT OF TRANSPORTATION

CONSTRUCTION DETAILS

BDC02D-08 - RETROREFLECTIVE SHEETING
BDC03D-01 - CD-617-1.3
BDC01D-4 - ORIGINAL SHEET

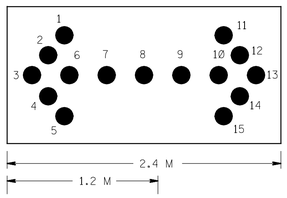

1.2 M x 2.4 M BOARD

FLASHING MESSAGES TO LIGHT AS FOLLOWS

RIGHT ARROW	3,6,7,8,9,11,12,13,14&15
LEFT ARROW	1,2,3,4,5,7,8,9,10&13
DOUBLE ARROW	1,2,3,4,5,7,8,9,11,12,13,14&15
CAUTION MODE	1,5,11 &15

0.6 M x 1.2 M BOARD

RIGHT ARROW	3,6,7,9,10,11,12&13
LEFT ARROW	1,2,3,4,5,7,8&11
DOUBLE ARROW	1,2,3,4,5,7,9,10,11,12&13
CAUTION MODE	1,5,9 &13

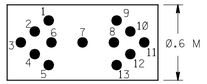

ILLUMINATED FLASHING ARROWS, ___ BY ___ MM

CD-617-2.1

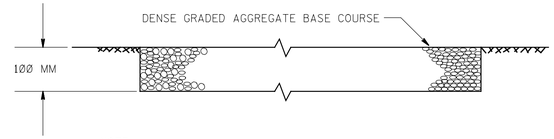

NOTE:

ALL EXCAVATION OR EMBANKMENT REQUIRED TO CONSTRUCT TEMPORARY SIDEWALK SHALL BE INCLUDED IN UNIT PRICE BID FOR PAY ITEM, TEMPORARY SIDEWALK.

TEMPORARY SIDEWALK

CD-617-2.5

DELINEATOR GUIDE POSTS SHALL BE PREDOMINATELY ORANGE IN COLOR

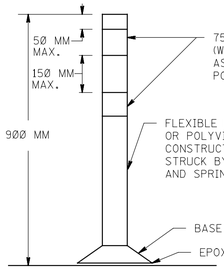

75 MM COMPLETE WRAP AROUND SILVER (WHITE) RETROREFLECTIVE SHEETING, ASTM D 4956, TYPE VII OR VIII, WHEN POSTS ARE USED FROM DUSK TO DAWN.

FLEXIBLE POLYETHELENE, POLYURETHANE OR POLYVINYL POST SHALL BE SO CONSTRUCTED THAT THEY WILL BEND WHEN STRUCK BY THE AVERAGE PASSENGER VEHICLE AND SPRING BACK INTO POSITION.

BASE SHALL BE SEPARATE FROM POST

EPOXY CEMENT

THE BASE SHALL BE REMOVED FROM THE PAVEMENT WHEN THE POST IS NO LONGER NEEDED.

DELINEATOR GUIDE POSTS

MINOR MANUFACTURER'S VARIATIONS MAY BE ACCEPTABLE UPON APPROVAL OF THE ENGINEER.

CD-617-2.2

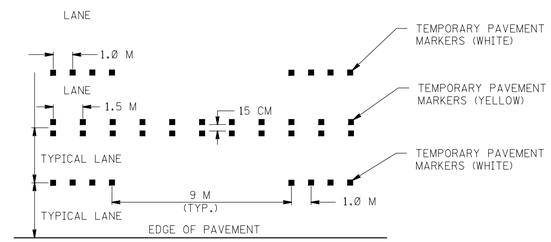

TEMPORARY PAVEMENT MARKERS

NOTES:

1. WHEN TEMPORARY PAVEMENT MARKERS ARE TO SIMULATE LANE LINES ON SHARP CURVES OR IN TRANSITIONS TO EITHER REDUCE THE NUMBER OF LANES OR TO SHIFT TRAFFIC LATERALLY, THE TEMPORARY PAVEMENT MARKERS SHALL BE SPACED 1.5 METERS APART CONTINUOUSLY THROUGH THE CURVE OR TRANSITION AREA.

2. TEMPORARY PAVEMENT MARKERS SHOULD NOT BE USED TO DELINEATE RIGHT EDGE LINES.

CD-617-2.6

ALTERNATE ORANGE AND SILVER (WHITE) STRIPES SHALL BE RETROREFLECTIVE SHEETING, ASTM D 4956 TYPE III, 150 MM WIDE SLOPING DOWNWARD AT AN ANGLE OF 45° IN THE DIRECTION TRAFFIC IS TO PASS.

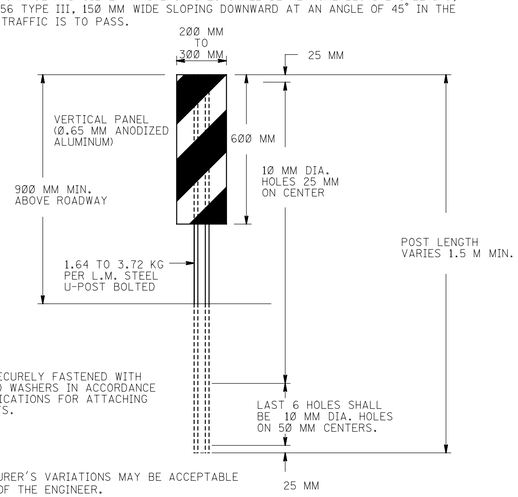

PANELS TO BE SECURELY FASTENED WITH BOLTS, NUTS AND WASHERS IN ACCORDANCE WITH THE SPECIFICATIONS FOR ATTACHING SIGNS TO U-POSTS.

MINOR MANUFACTURER'S VARIATIONS MAY BE ACCEPTABLE UPON APPROVAL OF THE ENGINEER.

VERTICAL PANELS

CD-617-2.3

R 1-1
600 x 600 MM,
200 MM C LETTERS

WHITE MESSAGE AND BORDER ON RED BACKGROUND.

NOTE:

SIGN FACES SHALL BE RETROREFLECTIVE SHEETING, ASTM D 4956 TYPE III.

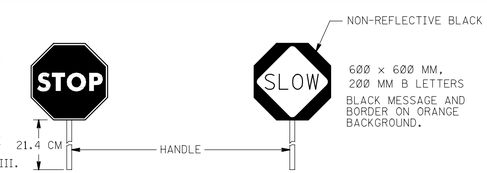

600 x 600 MM,
200 MM B LETTERS

BLACK MESSAGE AND BORDER ON ORANGE BACKGROUND.

STOP VIEW

SLOW VIEW

STOP/SLOW PADDLE

CD-617-2.4

NOTE: ALL DIMENSIONS SHOWN ON THIS SHEET ARE IN MILLIMETERS UNLESS OTHERWISE NOTED.

TRAFFIC CONTROL DEVICES AND DETAILS

N.T.S.

CD-617-2

NEW JERSEY DEPARTMENT OF TRANSPORTATION

CONSTRUCTION DETAILS

J:\road2\StdDet\cd617d.dgn
BDC02D-08 - RETROREFLECTIVE SHEETING
BDC01D-4 - ORIGINAL SHEET

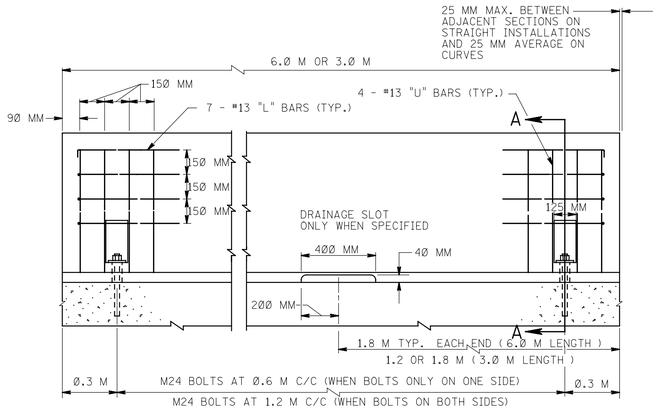

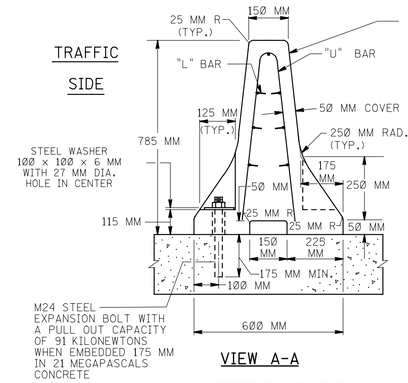

VIEW A-A

CONCRETE PAVEMENT

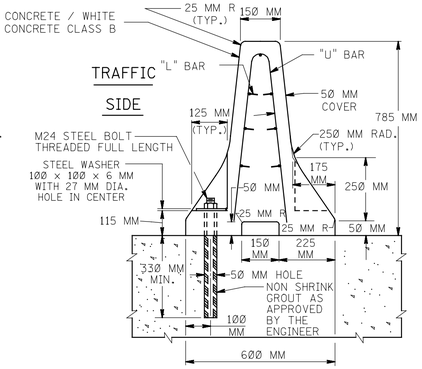

VIEW A-A

HMA PAVEMENT

NOTES ;

1. THE APPROACH END OF THE PRECAST CONCRETE CURB, CONSTRUCTION BARRIER SHOULD BE FLARED AWAY FROM TRAFFIC AT A RATE OF 1:20. WHERE POSTED SPEEDS ARE LESS THAN 80 KM/HR A FLARE RATE OF 1:15 MAY BE USED. ON CURVED ROADWAYS, KINKS IN THE BARRIER ALIGNMENT SHOULD BE AVOIDED.
2. REINFORCING SHOWN IS THE MINIMUM REQUIRED. ADDITIONAL REINFORCING NECESSARY FOR HANDLING SHALL BE THE OPTION AND RESPONSIBILITY OF THE CONTRACTOR.
3. IF TRAFFIC WILL BE ON BOTH SIDES OF THE BARRIER, THE CONTRACTOR SHALL PROVIDE BOLT RECESSES SO THE BOLTS CAN BE INSTALLED AT 1.2 M C. TO C. ON EACH SIDE. AT THE OPTION OF THE CONTRACTOR BOLT RECESSES AND BOLTS MAY BE PROVIDED AT 1.2 M C. TO C. ON EACH SIDE WHEN TRAFFIC IS ONLY ON ONE SIDE OF THE BARRIER.
4. WHEN THE BARRIER HAS BEEN REMOVED, THE BOLTS SHALL BE REMOVED OR CUT OFF TO A LEVEL OF 15 MM MINIMUM BELOW THE PAVEMENT SURFACE AND THE HOLES SHALL BE FILLED TO THE SATISFACTION OF THE ENGINEER.
5. BOLTS, OTHER THAN EXPANSION BOLTS, SHALL BE THREADED RODS MADE FROM ASTM GRADE 250 STEEL. NUTS SHALL CONFORM TO ASTM A 307.
6. VARIATIONS TO THE DETAILS SHALL BE SUBJECT TO APPROVAL.
7. FOR INSTALLATION ON BRIDGE DECKS, REFER TO BRIDGE PLANS FOR NECESSARY MODIFICATIONS, AS REQUIRED.
8. REINFORCEMENT STEEL SHALL CONFORM TO SUBSECTION 915.01 A, DEFORMED BARS.

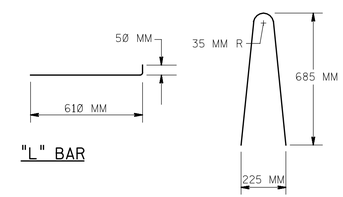

"L" BAR

"U" BAR

PRECAST CONCRETE CURB, CONSTRUCTION BARRIER TYPE 1

CD-617-3.1

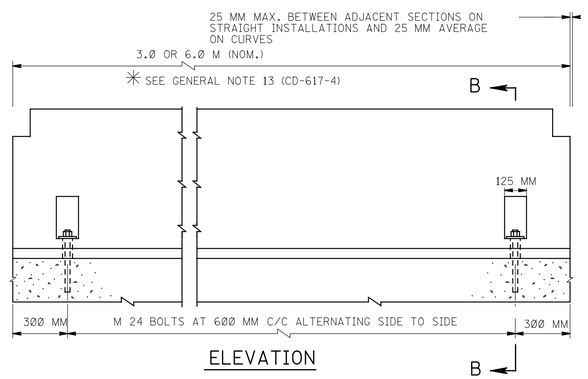

ELEVATION

NOTES:

1. BOLTS AND NUTS SHALL CONFORM TO ASTM A 307.
2. BOLTS SHALL BE REQUIRED IN EVERY ANCHOR POCKET HOLE.
3. CONNECTION KEY SHALL BE USED WITH TYPE 1 APPLICATION.
4. WHEN BARRIER HAS BEEN REMOVED, THE BOLTS SHALL BE REMOVED OR CUT OFF TO A LEVEL OF 13 MM MINIMUM BELOW THE SURFACE AND THE HOLE FILLED TO THE SATISFACTION OF THE ENGINEER.

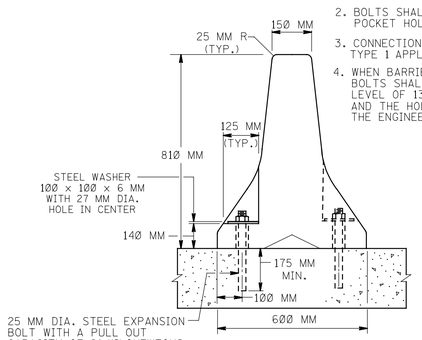

VIEW B-B

CONCRETE PAVEMENT

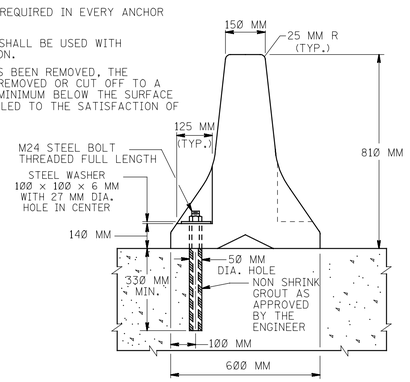

VIEW B-B

HMA PAVEMENT

ANCHORAGE DETAILS FOR TYPE 4 BARRIER USED FOR TYPE 1

CD-617-3.2

NOTE: ALL DIMENSIONS SHOWN ON THIS SHEET ARE IN MILLIMETERS UNLESS OTHERWISE NOTED.

PRECAST CONCRETE CURB, CONSTRUCTION BARRIER, TYPE 1

HMA = HOT MIX ASPHALT
N.T.S.

CD-617-3

NEW JERSEY DEPARTMENT OF TRANSPORTATION

CONSTRUCTION DETAILS

BDC020-01 - CD-617-3.1
BDC010-4 - ORIGINAL SHEET

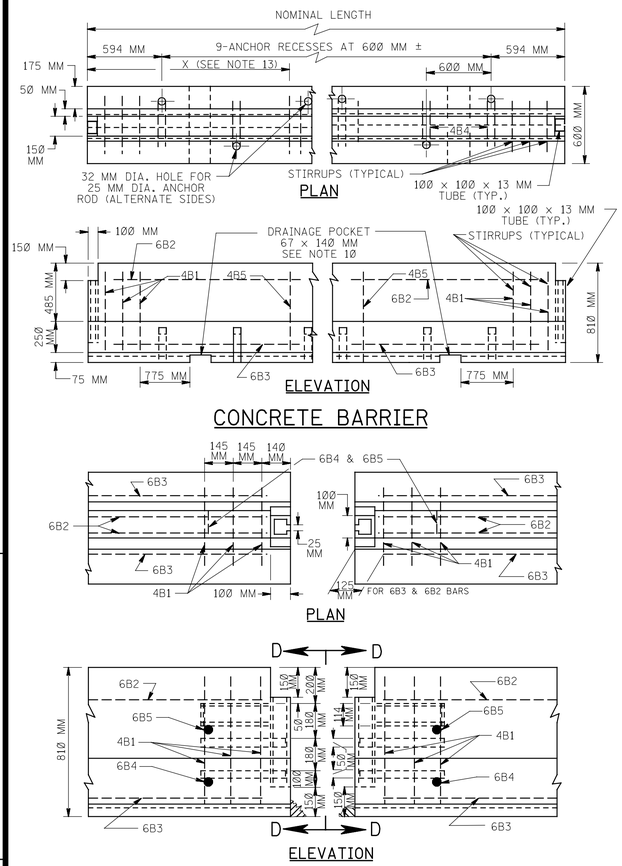

CONCRETE BARRIER

BARRIER AT JOINT

NOTE A

THE LENGTH OF THE ANCHOR PINS SHALL BE SUCH THAT THE FOLLOWING MINIMUM EMBEDMENT LENGTHS ARE OBTAINED:

(a) INTO PORTLAND CEMENT CONCRETE PAVEMENT 125 MM.
(b) INTO FLEXIBLE PAVEMENT 450 MM
(c) INTO UNPAVED AREA 750 MM

WHEN ANCHOR PINS ARE IN PLACE, THEY SHALL NOT PROJECT ABOVE THE PLANE OF THE CONCRETE SURFACE OF THE BARRIER.

HOLES IN BRIDGE DECKS SHALL BE 32 MM DIA. MAXIMUM AND MADE WITH A CORE DRILL OR ANY OTHER APPROVED ROTARY DRILLING DEVICE THAT DOES NOT IMPART AN IMPACT FORCE.

NOTE B

IN UNITS THAT ARE TO BE ANCHORED, PINS SHALL BE REQUIRED IN EVERY ANCHOR RECESS.

NOTE C

FOR INSTALLATION ON BRIDGE DECKS REFER TO BRIDGE PLANS FOR NECESSARY MODIFICATIONS AS REQUIRED AND GENERAL NOTE 16.

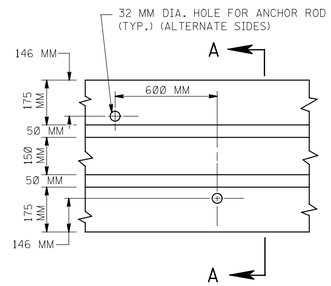

PLAN-ANCHOR RECESS

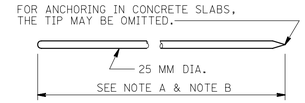

ANCHOR PIN

JOINT CLASS	TABLE OF JOINT AND ANCHORAGE TREATMENTS
	JOINT TREATMENT
A	CONNECTION KEY ONLY
B	CONNECTION KEY & GROUT IN EVERY JOINT
C	CONNECTION KEY & GROUT, IN EVERY JOINT & PIN EVERY OTHER UNIT. IN UNITS THAT ARE TO BE ANCHORED, PINS SHALL BE REQUIRED IN EVERY ANCHOR RECESS

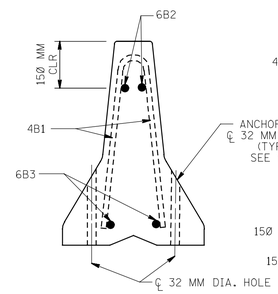

SECTION A-A

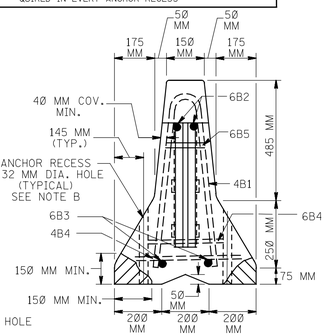

PLACE GROUT IN HATCHED AREAS BETWEEN SECTIONS, WHEN REQUIRED BY THE TABLE OF JOINT TREATMENT.

SECTION D-D

GENERAL NOTES:

1. STEEL PLATE SHALL BE ASTM A 36, A 588, A 441, OR A 572 GRADE 345.
2. REINFORCING BARS SHALL BE ASTM A 615, GRADE 400.
3. CONCRETE SHALL BE CONCRETE / WHITE CONCRETE CLASS B.
4. CONCRETE CLEAR COVER FOR REINFORCING BARS SHALL BE 40 MM (MIN.).
5. A MINIMUM OF (2) TWO RECESSED LIFTING DEVICES SHALL BE USED ON EACH SECTION. EACH LIFTING DEVICE SHALL HAVE A MINIMUM CAPACITY OF 5.4 MEGAGRAMS.
6. TUBE STEEL SHALL BE ASTM A 500, GRADE B OR C.
7. ANCHOR PINS SHALL BE 25 MM DIA. ASTM A 36M.
8. ANCHOR PINS ARE NOT REQUIRED IN EVERY UNIT. SEE TABLE OF JOINT TREATMENTS.
9. ALL END SECTIONS SHALL BE PINNED UNLESS OTHERWISE NOTED.
10. 67 × 140 MM DRAINAGE POCKETS - TWO REQUIRED IN SECTIONS 3.6 METERS & GREATER, 1 REQUIRED IN 2.4 METER & 3.0 METER SECTIONS.
11. AFTER A BARRIER UNIT HAS BEEN PLACED AND THE CONNECTION KEY INSERTED, REMOVE ANY SLACK IN THE JOINT BY PULLING THE UNIT IN A DIRECTION PARALLEL TO ITS LONGITUDINAL AXIS.
12. THE PRECAST CONCRETE CURB, CONSTRUCTION BARRIER SHALL BE CAST IN STEEL FORMS.
13. THE PRECAST CONCRETE CURB SHALL BE UNITS OF 6 METERS, HOWEVER, OTHER LENGTHS MAY BE USED TO MEET FIELD CONDITIONS, THE NUMBER AND PLACEMENT OF THE 4B4 AND 4B5 BARS WILL VARY WITH THE LENGTH OF THE BARRIER UNIT AS SHOWN ON THE TABLE OF VARIABLE BARS, THE 6B2 AND 6B3 BARS SHALL BE 250 MM SHORTER THAN THE NOMINAL LENGTH OF THE BARRIER UNITS.
14. REINFORCING SHOWN IS THE MINIMUM REQUIRED. ADDITIONAL REINFORCING NECESSARY FOR HANDLING SHALL BE THE OPTION AND RESPONSIBILTY OF THE CONTRACTOR.
15. WELDING AND FABRICATION OF STEEL STRUCTURES SHALL BE IN ACCORDANCE WITH SECTIONS 1 THRU 6 OF THE ANSI/AASHTO/AWS D1.5 BRIDGE WELDING CODE AND SECTION 10 OF THE ANSI/AWS D.1 STRUCTURAL WELDING CODE. SURFACES TO BE WELDED SHALL BE FREE OF SCALE, SLAG, RUST, MOISTURE, GREASE, OR ANY OTHER MATERIAL THAT WILL PREVENT PROPER WELDING OR PRODUCE OBJECTIONAL FUMES. WELDING SHALL BE SHALL BE SHIELDED METAL ARC WELDING USING PROPERLY DRIED 4 MM DIA. E7018 ELECTRODES.
16. AFTER REMOVAL OF THE BARRIER, THE HOLES IN THE SURFACE ON WHICH THE BARRIER SAT WHICH WERE USED TO ANCHOR THE SYSTEM, SHALL BE FILLED. THE ONLY EXCEPTION IS WHEN THE HOLES ARE IN AN AREA WHICH IS TO BE REMOVED. HOLES IN FLEXIBLE PAVEMENT, OR UNPAVED AREAS SHALL BE FILLED AS DIRECTED. HOLES IN PORTLAND CEMENT CONCRETE PAVEMENTS, OR STRUCTURAL DECKS, SHALL BE FILLED WITH NON-SHRINK GROUT MATERIAL MEETING THE REQUIREMENTS OF SECTION 914.03, EXCEPT THAT IN LATEX MODIFIED CONCRETE BRIDGE DECK, A COMPATIBLE NON-SHRINK GROUT MATERIAL SHALL BE USED.

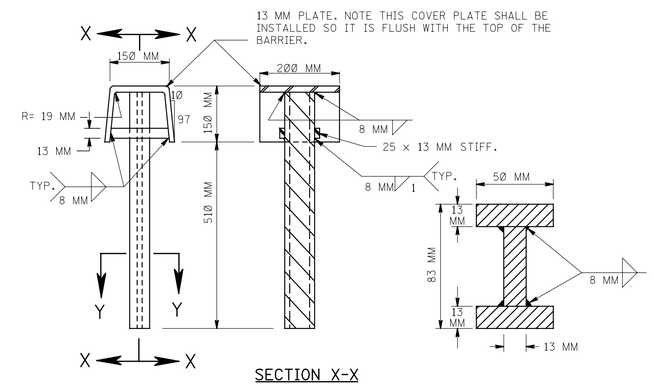

CONNECTION KEY

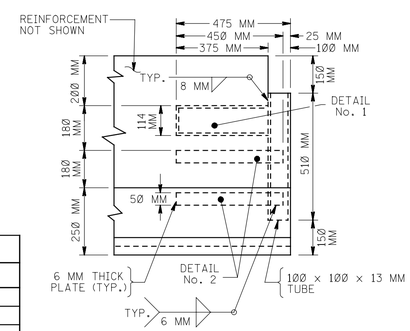

ELEVATION

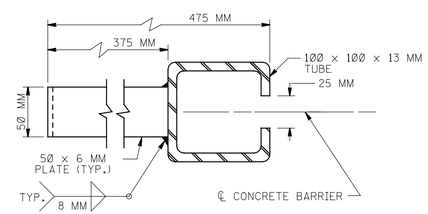

PLAN VIEW DETAIL No. 1

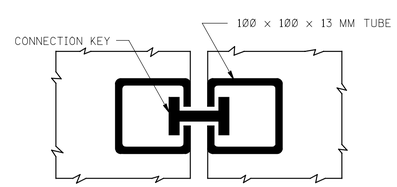

KEY IN PLACE

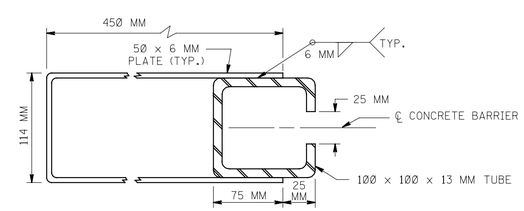

PLAN VIEW DETAIL No. 2

BARS LIST (EACH BARRIER SECTION)								
MARK	SIZE	NUMBER IN EACH SECTION	LENGTH	TYPE	A	B	C	LOCATION
4B1	#13	6	1 500 MM	I	125 MM	660 MM	50 MM	STIRRUPS
4B4	#13	SEE NOTE 13	940 MM	II	390 MM	100 MM		STIRRUPS
4B5	#13	SEE NOTE 13	1 500 MM	I	125 MM	660 MM	50 MM	STIRRUPS
6B2	#19	2	SEE NOTE 13	STR.				LONGITUDINAL (TOP) NORMAL SECTION
6B3	#19	2	SEE NOTE 13	STR.				LONGITUDINAL (BOTTOM) NORMAL SECTION
6B4	#19	2	355 MM	STR.				TRANSVERSE (BOTTOM) NORMAL SECTION
6B5	#19	2	150 MM	STR.				TRANSVERSE (TOP) NORMAL SECTION

TABLE OF VARIABLE BARS			
NOMINAL LENGTH OF BARRIER UNIT	MARK	"X"	NO. EACH SECTION
6.0 M	4B4	N.A.	9
6.0 M	4B5	2 110 MM	2
5.4 M	4B4	N.A.	8
5.4 M	4B5	1 955 MM	2
4.8 M	4B4	N.A.	7
4.8 M	4B5	1 805 MM	2
4.2 M	4B4	N.A.	6
4.2 M	4B5	2 135 MM	1
3.6 M	4B4	N.A.	5
3.6 M	4B5	1 830 MM	1
3.0 M	4B4	N.A.	4
3.0 M	4B5	1 525 MM	1
2.4 M	4B4	N.A.	3
2.4 M	4B5	-	0
"X" DISTANCE FROM END OF BARRIER TO 4B5 BAR			

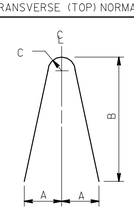

TYPE "I" BAR

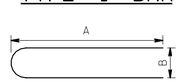

TYPE "II" BAR

PRECAST CONCRETE CURB, CONSTRUCTION BARRIER JOINT CONNECTION DETAILS

CD-617-4.1

NOTE: ALL DIMENSIONS SHOWN ON THIS SHEET ARE IN MILLIMETERS UNLESS OTHERWISE NOTED.

PRECAST CONCRETE CURB, CONSTRUCTION BARRIER, TYPE 4 (ALTERNATE A)

N.T.S.

CD-617-4

NEW JERSEY DEPARTMENT OF TRANSPORTATION

CONSTRUCTION DETAILS

BDC02D-01 - CD-617-4.1
BDC01D-4 - ORIGINAL SHEET

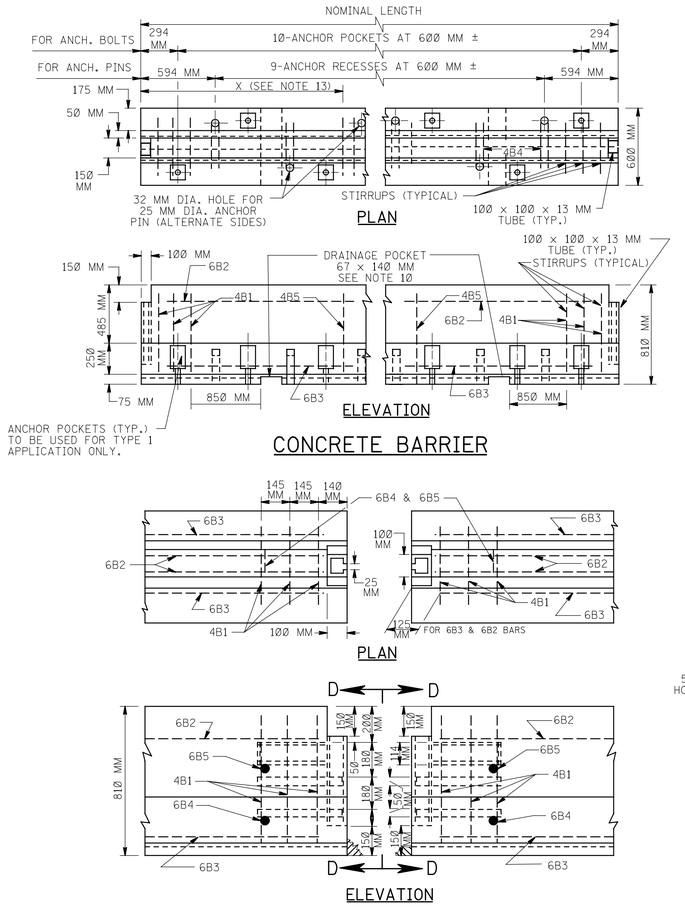

CONCRETE BARRIER

BARRIER AT JOINT

BARS LIST (EACH BARRIER SECTION)								
MARK	SIZE	NUMBER IN EACH SECTION	LENGTH	TYPE	A	B	C	LOCATION
4B1	#13	6	1 500 MM	I	125 MM	660 MM	50 MM	STIRRUPS
4B4	#13	SEE NOTE 13	940 MM	II	390 MM	100 MM		STIRRUPS
4B5	#13	SEE NOTE 13	1 500 MM	I	125 MM	660 MM	50 MM	STIRRUPS
6B2	#19	2	SEE NOTE 13	STR.				LONGITUDINAL (TOP) NORMAL SECTION
6B3	#19	2	SEE NOTE 13	STR.				LONGITUDINAL (BOTTOM) NORMAL SECTION
6B4	#19	2	355 MM	STR.				TRANSVERSE (BOTTOM) NORMAL SECTION
6B5	#19	2	150 MM	STR.				TRANSVERSE (TOP) NORMAL SECTION

TABLE OF VARIABLE BARS			
NOMINAL LENGTH OF BARRIER UNIT	MARK	"X"	NO. EACH SECTION
6.0 M	4B4	N.A.	9
6.0 M	4B5	2 110 MM	2
5.4 M	4B4	N.A.	8
5.4 M	4B5	1 955 MM	2
4.8 M	4B4	N.A.	7
4.8 M	4B5	1 805 MM	2
4.2 M	4B4	N.A.	6
4.2 M	4B5	2 135 MM	1
3.6 M	4B4	N.A.	5
3.6 M	4B5	1 830 MM	1
3.0 M	4B4	N.A.	4
3.0 M	4B5	1 525 MM	1
2.4 M	4B4	N.A.	3
2.4 M	4B5	-	0
"X" DISTANCE FROM END OF BARRIER TO 4B5 BAR			

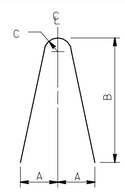

TYPE "I" BAR

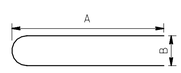

TYPE "II" BAR

NOTE A

THE LENGTH OF THE ANCHOR PINS SHALL BE SUCH THAT THE FOLLOWING MINIMUM EMBEDMENT LENGTHS ARE OBTAINED:

(a) INTO PORTLAND CEMENT CONCRETE PAVEMENT 125 MM.
(b) INTO FLEXIBLE PAVEMENT 450 MM
(c) INTO UNPAVED AREA 750 MM

WHEN ANCHOR PINS ARE IN PLACE, THEY SHALL NOT PROJECT ABOVE THE PLANE OF THE CONCRETE SURFACE OF THE BARRIER.

HOLES IN BRIDGE DECKS SHALL BE 32 MM DIAMETER MAXIMUM AND MADE WITH A CORE DRILL OR ANY OTHER APPROVED ROTARY DRILLING DEVICE THAT DOES NOT IMPART AN IMPACT FORCE.

NOTE B

IN UNITS THAT ARE TO BE ANCHORED, PINS SHALL BE REQUIRED IN EVERY ANCHOR PIN RECESS.

NOTE C

FOR INSTALLATION ON BRIDGE DECKS REFER TO BRIDGE PLANS FOR NECESSARY MODIFICATIONS AS REQUIRED AND GENERAL NOTES 16 & 17.

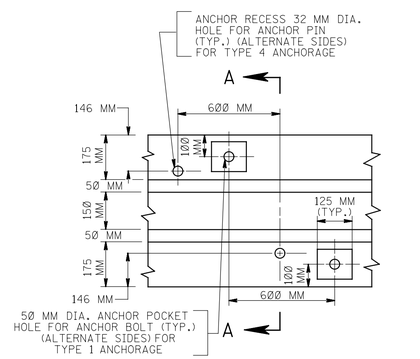

PLAN-ANCHOR RECESS/POCKET

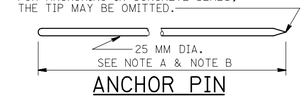

ANCHOR PIN

JOINT CLASS	TABLE OF JOINT AND ANCHORAGE TREATMENTS FOR TYPE 4 APPLICATIONS ONLY
	JOINT TREATMENT
A	CONNECTION KEY ONLY
B	CONNECTION KEY & GROUT IN EVERY JOINT
C	CONNECTION KEY & GROUT, IN EVERY JOINT & PIN EVERY OTHER UNIT. IN UNITS THAT ARE TO BE ANCHORED, PINS SHALL BE REQUIRED IN EVERY ANCHOR PIN RECESS
D	CONNECTION KEY AND GROUT EVERY JOINT, BOLT EVERY ANCHOR POCKET HOLE IN EVERY UNIT.

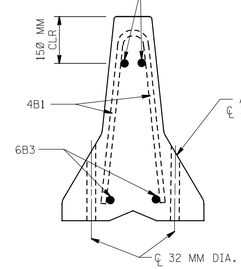

SECTION A-A

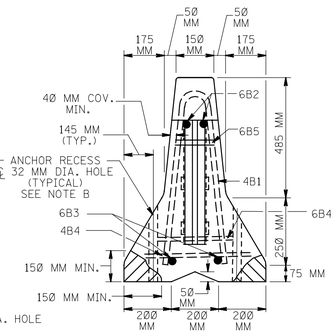

PLACE GROUT IN HATCHED AREAS BETWEEN SECTIONS, WHEN REQUIRED BY THE TABLE OF JOINT TREATMENT.

SECTION D-D

GENERAL NOTES:

1. STEEL PLATE SHALL BE ASTM A 36, A 588, A 441, OR A 572 GRADE 345.
2. REINFORCING BARS SHALL BE ASTM A 615, GRADE 400.
3. CONCRETE SHALL BE CONCRETE / WHITE CONCRETE CLASS B.
4. CONCRETE CLEAR COVER FOR REINFORCING BARS SHALL BE 40 MM (MIN.).
5. A MINIMUM OF (2) TWO RECESSED LIFTING DEVICES SHALL BE USED ON EACH SECTION. EACH LIFTING DEVICE SHALL HAVE A MINIMUM CAPACITY OF 5.4 MEGAGRAMS.
6. TUBE STEEL SHALL BE ASTM A 500, GRADE B OR C.
7. ANCHOR PINS SHALL BE 25 MM DIA. ASTM A 36M.
8. ANCHOR PINS ARE NOT REQUIRED IN EVERY UNIT. SEE TABLE OF JOINT TREATMENTS.
9. ALL END SECTIONS SHALL BE PINNED UNLESS OTHERWISE NOTED.
10. 67 x 140 MM DRAINAGE POCKETS - TWO REQUIRED IN SECTIONS 3.6 METERS & GREATER, 1 REQUIRED IN 2.4 & 3.0 METER SECTIONS.
11. AFTER A BARRIER UNIT HAS BEEN PLACED AND THE CONNECTION KEY INSERTED, REMOVE ANY SLACK IN THE JOINT BY PULLING THE UNIT IN A DIRECTION PARALLEL TO ITS LONGITUDINAL AXIS.
12. THE PRECAST CONCRETE CURB, CONSTRUCTION BARRIER SHALL BE CAST IN STEEL FORMS.
13. THE PRECAST CONCRETE CURB SHALL BE UNITS OF 3 OR 6 METERS, HOWEVER, OTHER LENGTHS MAY BE USED TO MEET FIELD CONDITIONS. THE NUMBER AND PLACEMENT OF THE 4B4 AND 4B5 BARS WILL VARY WITH THE LENGTH OF THE BARRIER UNIT AS SHOWN ON THE TABLE OF VARIABLE BARS. THE 6B2 AND 6B3 BARS SHALL BE 250 MM SHORTER THAN THE NOMINAL LENGTH OF THE BARRIER UNITS.
14. REINFORCING SHOWN IS THE MINIMUM REQUIRED. ADDITIONAL REINFORCING NECESSARY FOR HANDLING SHALL BE THE OPTION AND RESPONSIBILTY OF THE CONTRACTOR.
15. WELDING AND FABRICATION OF STEEL STRUCTURES SHALL BE IN ACCORDANCE WITH SECTIONS 1 THRU 6 OF THE ANSI/AASHTO/AWS D1.5 BRIDGE WELDING CODE AND SECTION 10 OF THE ANSI/AWS D.1 STRUCTURAL WELDING CODE. SURFACES TO BE WELDED SHALL BE FREE OF SCALE, SLAG, RUST, MOISTURE, GREASE, OR ANY OTHER MATERIAL THAT WILL PREVENT PROPER WELDING OR PRODUCE OBJECTIONAL FUMES. WELDING SHALL BE SHIELDED METAL ARC WELDING USING PROPERLY DRIED 4 MM DIA. E7018 ELECTRODES.
16. AFTER REMOVAL OF THE BARRIER, THE HOLES IN THE SURFACE ON WHICH THE BARRIER SAT WHICH WERE USED TO ANCHOR THE SYSTEM, SHALL BE FILLED. THE ONLY EXCEPTION IS WHEN THE HOLES ARE IN AN AREA WHICH IS TO BE REMOVED. HOLES IN FLEXIBLE PAVEMENT, OR UNPAVED AREAS SHALL BE FILLED AS DIRECTED. HOLES IN PORTLAND CEMENT CONCRETE PAVEMENTS, OR STRUCTURAL DECKS, SHALL BE FILLED WITH NON-SHRINK GROUT MATERIAL MEETING THE REQUIREMENTS OF SECTION 914.03, EXCEPT THAT IN LATEX MODIFIED CONCRETE BRIDGE DECK, A COMPATIBLE NON-SHRINK GROUT MATERIAL SHALL BE USED.
17. ONLY THE TYPE 4, JOINT CLASS D, SHALL BE USED AS BRIDGE PARAPETS.

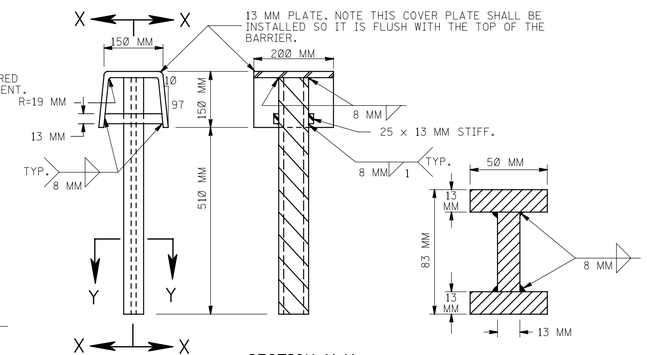

CONNECTION KEY

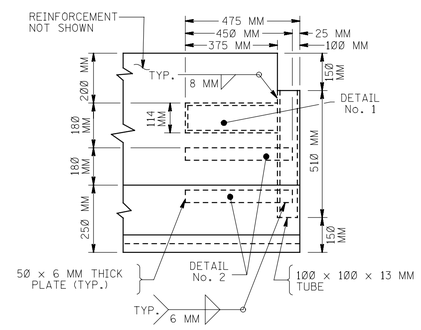

ELEVATION

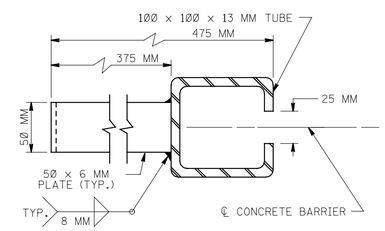

PLAN VIEW
DETAIL No. 1

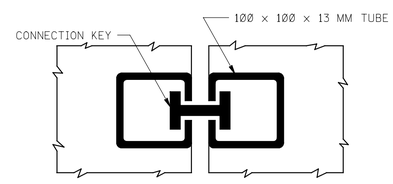

KEY IN PLACE

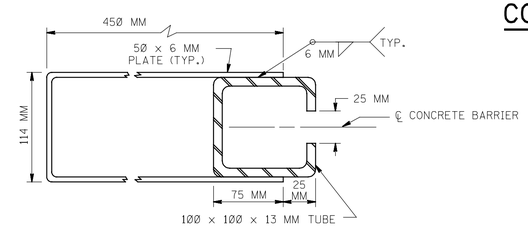

PLAN VIEW
DETAIL No. 2

PRECAST CONSTRUCTION BARRIER JOINT CONNECTION DETAILS

CD-617-5.1

NOTE: ALL DIMENSIONS SHOWN ON THIS SHEET ARE IN MILLIMETERS UNLESS OTHERWISE NOTED.

PRECAST CONCRETE CURB, CONSTRUCTION BARRIER TYPE 4, (ALTERNATE B)

N.T.S.

CD-617-5

NEW JERSEY DEPARTMENT OF TRANSPORTATION

CONSTRUCTION DETAILS

BDC020-01 - CD-617-5.1
BDC010-4 - ORIGINAL SHEET

G20 - 1
1 500 x 600 MM
(0.9 S.M.)

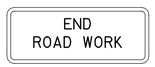

G20 - 2A
1 200 x 600 MM
(0.7 S.M.)

M4 - 9L (LEFT)
M4 - 9R (RIGHT)
750 x 600 MM
(0.5 S.M.)

M4 - 9 (L or R)(S)
1 200 x 900 MM
(1.1 S.M.)

M4 - 9LX (LEFT)
M4 - 9RX (RIGHT)
750 x 600 MM
(0.5 S.M.)

M4 - 9 (L or R)XS
1 200 x 900 MM
(1.1 S.M.)

M4 - 9X
750 x 600 MM
(0.5 S.M.)

M4 - 9X (S)
1 200 x 900 MM
(1.1 S.M.)

M4 - 10L (LEFT)
M4 - 10R (RIGHT)
1 200 x 450 MM
(0.5 S.M.)

M4 - 8a
600 x 450 MM
(0.3 S.M.)

M4 - 11 (S)
1 200 x 900 MM
(1.1 S.M.)

R2 - 1
600 x 750 MM
(0.5 S.M.)

R2 - 1 (S)
1 200 x 1 500 MM
(1.8 S.M.)

R2 - 5a
600 x 750 MM
(0.5 S.M.)

R2 - 5a (S)
1 200 x 1 500 MM
(1.8 S.M.)

R4 - 1
600 x 750 MM
(0.5 S.M.)

R11 - 2
1 200 x 750 MM
(0.9 S.M.)

R11 - 3
1 500 x 750 MM
(1.1 S.M.)

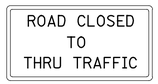

R11 - 4
1 500 x 750 MM
(1.1 S.M.)

(L OR R)
W1 - 4a
1 200 x 1 200 MM
(1.4 S.M.)

(L OR R)
W1- 6
1 200 x 600 MM
(0.7 S.M.)

W1 - 6 (S)
1 500 x 750 MM
(1.1 S.M.)

(L OR R)
W4 - 2 (S)
1 200 x 1 200 MM
(1.4 S.M.)

W5 - 1 (S)
1 200 x 1 200 MM
(1.4 S.M.)

W6 - 3
1 200 x 1 200 MM
(1.4 S.M.)

W20 - 7b
1 200 x 1 200 MM
(1.4 S.M.)

W13 - 1
450 x 450 MM
(0.2 S.M.)

W13 - 1 (S)
600 x 600 MM
(0.4 S.M.)

W20 - 1A
1 200 x 1 200 MM
(1.4 S.M.)

W20 - 2
1 200 x 1 200 MM
(1.4 S.M.)

W20 - 3
1 200 x 1 200 MM
(1.4 S.M.)

W20 - 4
1 200 x 1 200 MM
(1.4 S.M.)

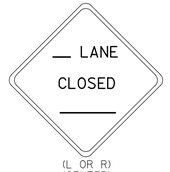

(L OR R)
(CENTER)
W20 - 5
1 200 x 1 200 MM
(1.4 S.M.)

W20 - 7a
1 200 x 1 200 MM
(1.4 S.M.)

W21 - 5 (S)
1 200 x 1 200 MM
(1.4 S.M.)

M4 - 9N
750 x 300 MM MIN.
(0.2 S.M.)
(SIZE WILL VARY WITH
LENGTH OF STREET NAME)

STREET NAME SIGN TO
BE USED IN CONJUNCTION
WITH M4 - 9 SIGNS
BLACK ON ORANGE

600 x 600 MM
(0.4 S.M.)
750 x 750 MM (S)
(0.6 S.M.)

600 x 600 MM
(0.4 S.M.)
750 x 750 MM (S)
(0.6 S.M.)

W8 - 1 (S)
1 200 x 1 200 MM
(1.4 S.M.)

W8 - 9a
1 200 x 1 200 MM
(1.4 S.M.)

W8 - 14
1 200 x 1 200 MM
(1.4 S.M.)

W8 - 14A
1 200 x 1 200 MM
(1.4 S.M.)

W99 - 2
1 200 x 1 200 MM
(1.4 S.M.)

NOTE: THE BORDER, THE WORDS "GIVE US A", "SLOW DOWN!", AND THE BRAKE PEDAL ARE BLACK; LEAVING THE WORD "BRAKE" ORANGE.

GENERAL NOTES;

1. DIMENSIONS, COLORS AND DETAILS OF VARIOUS SIZE SIGNS, AND ACCESSORY PANELS TO FOLLOW STANDARDS IN THE CURRENT "STANDARD HIGHWAY SIGN PUBLICATION" AND THE CURRENT "MANUAL ON UNIFORM TRAFFIC CONTROL DEVICES FOR STREETS AND HIGHWAYS".

2. (S) REPRESENTS A SPECIAL SIZE SIGN.

3. LETTERS AND NUMERALS SHALL CONFORM TO THE CURRENT MANUAL, "STANDARD ALPHABETS FOR HIGHWAY SIGNS" U.S. DEPARTMENT OF TRANSPORTATION, FEDERAL HIGHWAY ADMINISTRATION.

4. THE CONTRACTOR SHALL OBTAIN THE APPROVAL OF THE ENGINEER FOR THE DISTANCE TO BE USED ON THE ADVANCE WARNING SIGNS, AND FOR THE SPEED LIMIT TO BE USED ON THE R2-1 SIGN.

5. DISTANCE LEGEND

SIGN NUMBER FOLLOWED BY

LETTER	DISTANCE
A	1500'
B	1000'
C	500'
D	__MILE
E	__MILES AHEAD
F	AHEAD

BACKING MATERIAL

1. ALUMINUM SHALL BE FLAT SHEET OF ALLOY 5052-H38 OR 6061-T6 ALLOY, 2.5 MM THICK.

TEMPORARY SIGN SUPPORTS

1. SIGN SUPPORTS SHALL BE OF WELL SEASONED LUMBER, S4S, FREE OF SPLITS, KNOTS AND WARPS OR, OF STEEL COMPONENTS.

2. WOOD POSTS SHALL HAVE A UNIFORM CROSS-SECTION AND SHALL NOT EXCEED THE FOLLOWING DIMENSIONS FOR:

SINGLE POST = 100 x 150 MM ;
TWO POSTS = 75 x 150 MM OR
100 x 125 MM ;
THREE POSTS = 75 x 125 MM OR
100 x 100 MM

100 x 150 MM WOOD POSTS SHALL BE MODIFIED BY DRILLING 40 MM DIAMETER HOLES 100 MM AND 450 MM ABOVE THE GROUND LINE AND PERPENDICULAR TO THE ROADWAY CENTERLINE.

3. NO BRACING IS PERMITTED. VERTICAL CLEARANCES FOR SIGNS MOUNTED ON WOOD SUPPORTS SHALL BE 2.1 M MINIMUM. EMBEDMENT DEPTH FOR THE WOOD POST SHALL NOT EXCEED 1.0 M.

4. STEEL POSTS SHALL BE IN ACCORDANCE WITH THE STANDARD DETAIL FOR U-POST SIGN SUPPORT.

5. TEMPORARY SIGN SUPPORTS NOT MEETING THIS CRITERIA SHALL BE SHIELDED BY A LONGITUDINAL BARRIER OR CRASH CUSHIONS.

SIGN FACES

1. SIGN FACES SHALL BE ASTM D 4956 TYPE VII OR VIII FLUORESCENT ORANGE SHEETING.

FASTENING

1. ALL SIGNS SHALL BE SECURELY FASTENED TO THEIR SUPPORTS WITH BOLTS, NUTS AND WASHERS IN ACCORDANCE WITH THE SPECIFICATIONS.

CONSTRUCTION SIGNS

N.T.S.

CD-617-6.1

NOTE: ALL DIMENSIONS SHOWN ON THIS SHEET ARE IN MILLIMETERS UNLESS OTHERWISE NOTED.

CD-617-6

NEW JERSEY DEPARTMENT OF TRANSPORTATION

CONSTRUCTION DETAILS

BDC02D-08 - RETROREFLECTIVE SHEETING
BDC01D-4 - ORIGINAL SHEET

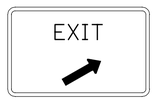

E5 - 1
1 500 × 1 200 MM
(1.8 S.M.)

W50 - 1C
1 500 × 1 200 MM
(1.8 S.M.)

W20 - 4F(M)
1 200 × 1 200 MM
(1.4 S.M.)

W20 - 10(G)
1 200 × 1 200 MM
(1.4 S.M.)

W9 - 3 a
1 200 X 1 200 MM
(1.4 SM)

W(NJ)100 - 1(L OR R)
1 200 × 1 200 MM
(1.4 SM)

W5-4
1 200 × 1 200 MM
(1.4 SM)

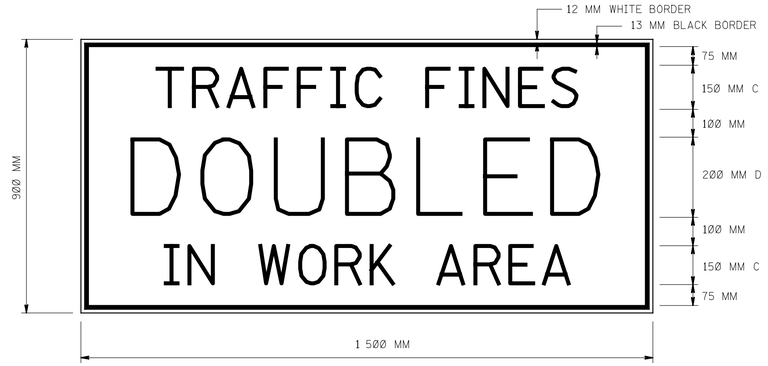

NOTE:

MESSAGE TO BE BLACK LETTERS
ON WHITE REFLECTIVE BACKGROUND.

R(NJ)5-17
1 500 × 900 MM
1.35 S.M.

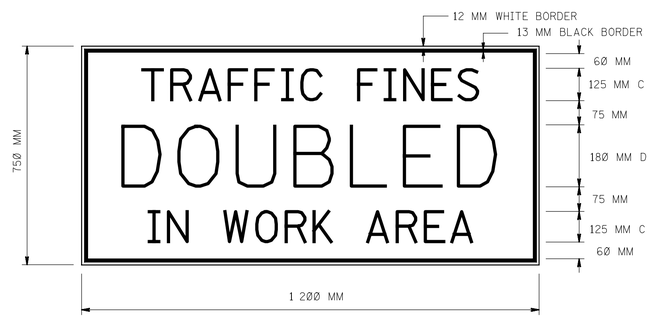

NOTE:

MESSAGE TO BE BLACK LETTERS
ON WHITE REFLECTIVE BACKGROUND.

R(NJ)5-17(S)
1 200 × 750 MM
0.90 S.M.

GENERAL NOTES:

1. DIMENSIONS, COLORS AND DETAILS OF VARIOUS SIZE SIGNS, AND ACCESSORY PANELS TO FOLLOW STANDARDS IN THE CURRENT "STANDARD HIGHWAY SIGN PUBLICATION" AND THE CURRENT "MANUAL ON UNIFORM TRAFFIC CONTROL DEVICES FOR STREETS AND HIGHWAYS".

2. (S) REPRESENTS A SPECIAL SIZE SIGN.

3. LETTERS AND NUMERALS SHALL CONFORM TO THE CURRENT MANUAL, "STANDARD ALPHABETS FOR HIGHWAY SIGNS" U.S. DEPARTMENT OF TRANSPORTATION, FEDERAL HIGHWAY ADMINISTRATION.

4. THE CONTRACTOR SHALL OBTAIN THE APPROVAL OF THE ENGINEER FOR THE DISTANCE TO BE USED ON THE ADVANCE WARNING SIGNS, AND FOR THE SPEED LIMIT TO BE USED ON THE R2-1 SIGN.

5. DISTANCE LEGEND

SIGN NUMBER FOLLOWED BY

LETTER	DISTANCE
A	1500'
B	1000'
C	500'
D	__MILE
E	__MILES AHEAD
F	AHEAD

BACKING MATERIAL

1. ALUMINUM SHALL BE FLAT SHEET OF ALLOY 5052-H38 OR 6061-T6 ALLOY, 2.5 MM THICK.

TEMPORARY SIGN SUPPORTS

1. SIGN SUPPORTS SHALL BE OF WELL SEASONED LUMBER, S4S, FREE OF SPLITS, KNOTS AND WARPS OR, OF STEEL COMPONENTS.

2. WOOD POSTS SHALL HAVE A UNIFORM CROSS-SECTION AND SHALL NOT EXCEED THE FOLLOWING DIMENSIONS FOR:

SINGLE POST = 100 × 150 MM ;
TWO POSTS = 75 × 150 MM OR
100 × 125 MM ;
THREE POSTS = 75 × 125 MM OR
100 × 100 MM

100 × 150 MM WOOD POSTS SHALL BE MODIFIED BY DRILLING 40 MM DIAMETER HOLES 100 MM AND 450 MM ABOVE THE GROUND LINE AND PERPENDICULAR TO THE ROADWAY CENTERLINE.

3. NO BRACING IS PERMITTED. VERTICAL CLEARANCES FOR SIGNS MOUNTED ON WOOD SUPPORTS SHALL BE 2.1 M MINIMUM. EMBEDMENT DEPTH FOR THE WOOD POST SHALL NOT EXCEED 1.0 M.

4. STEEL POSTS SHALL BE IN ACCORDANCE WITH THE STANDARD DETAIL FOR U-POST SIGN SUPPORT.

5. TEMPORARY SIGN SUPPORTS NOT MEETING THIS CRITERIA SHALL BE SHIELDED BY A LONGITUDINAL BARRIER OR CRASH CUSHIONS.

SIGN FACES

1. SIGN FACES SHALL BE ASTM D 4956 TYPE VII OR VIII FLUORESCENT ORANGE SHEETING.

FASTENING

1. ALL SIGNS SHALL BE SECURELY FASTENED TO THEIR SUPPORTS WITH BOLTS, NUTS AND WASHERS IN ACCORDANCE WITH THE SPECIFICATIONS.

CONSTRUCTION SIGNS

N.T.S.

BDC020-08 - RETROREFLECTIVE SHEETING
BDC010-4 - ORIGINAL SHEET

CD-617-7

NEW JERSEY DEPARTMENT OF TRANSPORTATION

CONSTRUCTION DETAILS

CD-617-7.1

SIGN NO. 1 (INTERSTATE)

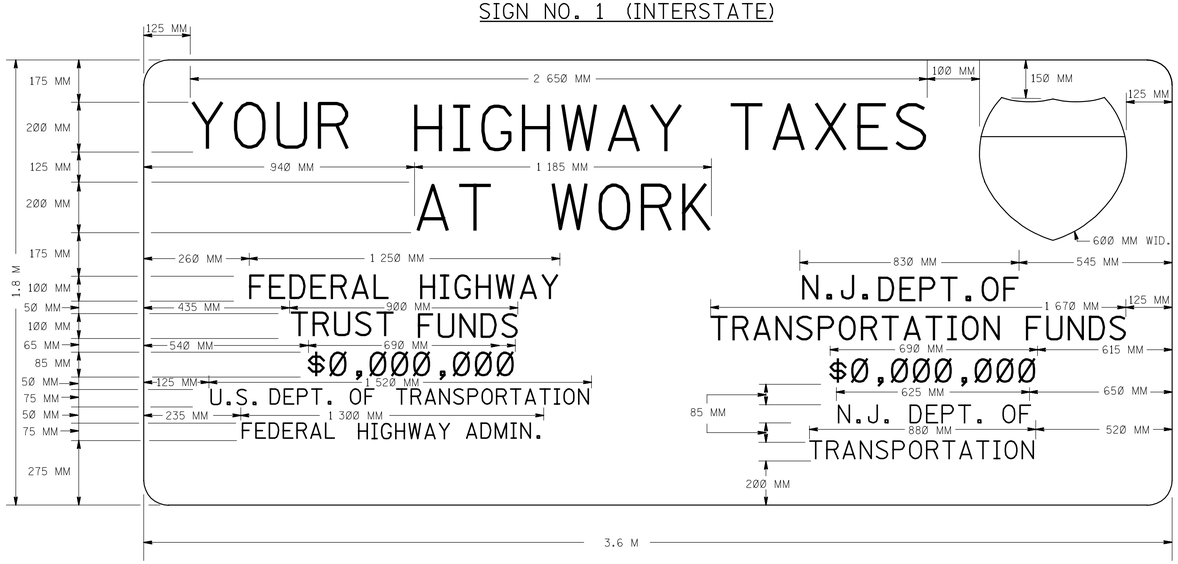

DETAILS OF SIGN NO. 1

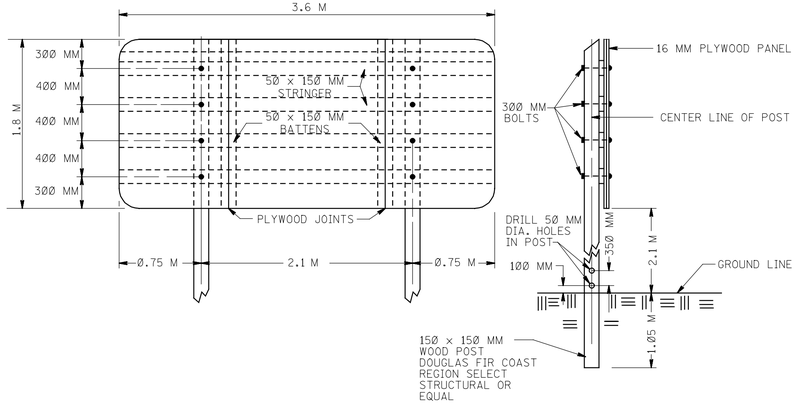

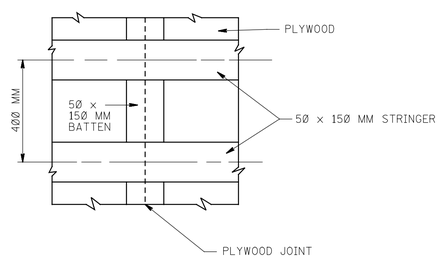

DETAIL OF BATTEN AT PLYWOOD JOINTS SIGN NO. 1

NOTES:

PLYWOOD PANELS SHALL COMFORM TO REQUIREMENTS FOR HIGH DENSITY OVERLAY AS SET FORTH IN COMMERCIAL STANDARD CS 45-60 FOR DOUGLAS FIR PLYWOOD AND ALL AMENDMENTS THERETO.

COSTS LISTED ON SIGNS TO BE FURNISHED BY ENGINEER AFTER AWARD OF CONTRACT.

SIGNS TO BE LOCATED AS SHOWN ON PLANS OR AS DIRECTED BY ENGINEER.

SHIELD TO COMFORM TO DETAILS SHOWN IN THE CURRENT "MANUAL ON UNIFORM TRAFFIC CONTROL DEVICES".

COLOR:
GREEN BACKGROUND WITH WHITE MESSAGE AND BORDER NOT REFLECTORIZED.

LEGEND:
SERIES "C" LETTERS - "YOUR HIGHWAY TAXES AT WORK" SERIES "D" LETTERS (BALANCE OF LETTERING).

CORNER RADIUS:
75 MM

INTERSTATE SHIELD:
RED, WHITE, AND BLUE

NOTE:

ON PROJECTS WITH NO FEDERAL FUNDING THE REFERENCE

FEDERAL HIGHWAY TRUST FUNDS
$0,000,000
U.S. DEPT. OF TRANSPORTATION
FEDERAL HIGHWAY ADMIN.

SHALL NOT BE INCLUDED ON THE SIGN.

INTERSTATE CONSTRUCTION IDENTIFICATION SIGN

N.T.S.

CD-617-8

NEW JERSEY DEPARTMENT OF TRANSPORTATION

CONSTRUCTION DETAILS

CD-617-8.1

NOTE: ALL DIMENSIONS SHOWN ON THIS SHEET ARE IN MILLIMETERS UNLESS OTHERWISE NOTED.

BDC010-4 - ORIGINAL SHEET

SIGN NO. 3 (SECONDARY)

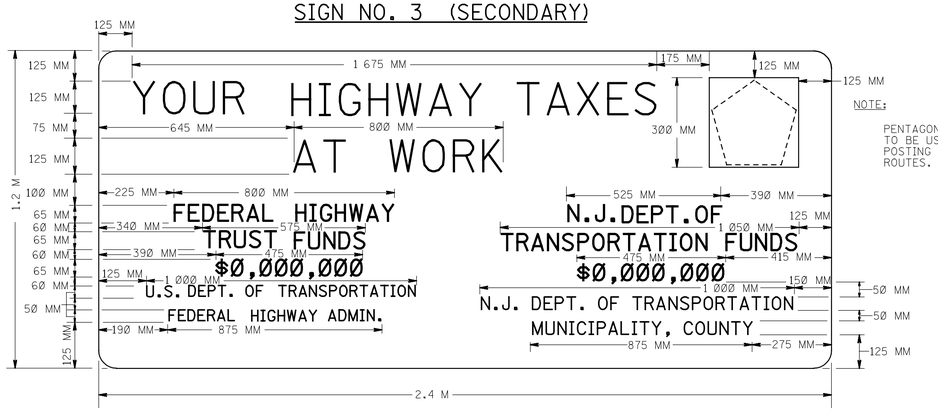

NOTE:

PENTAGON INSIGNIA TO BE USED WHEN POSTING COUNTY ROUTES.

SIGN NO. 2 (PRIMARY)

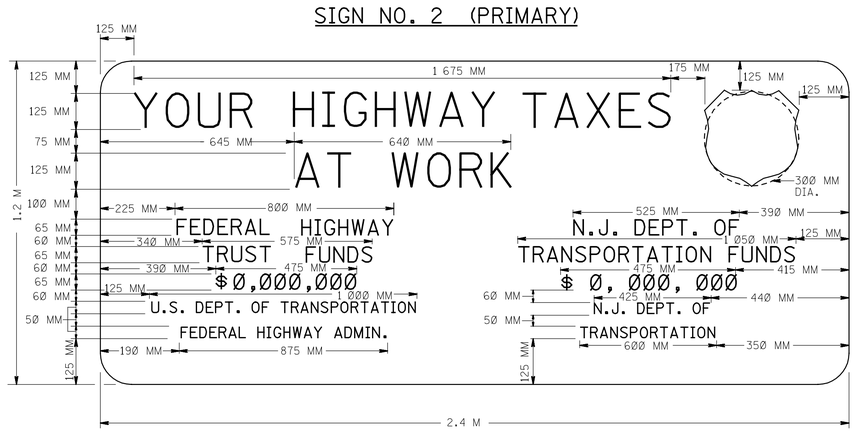

NOTE:

SHIELD INSIGNIA TO BE USED WHEN POSTING U. S. ROUTES.

CIRCLE INSIGNIA TO BE USED WHEN POSTING STATE ROUTES.

DETAILS OF SIGNS NO. 2 & 3

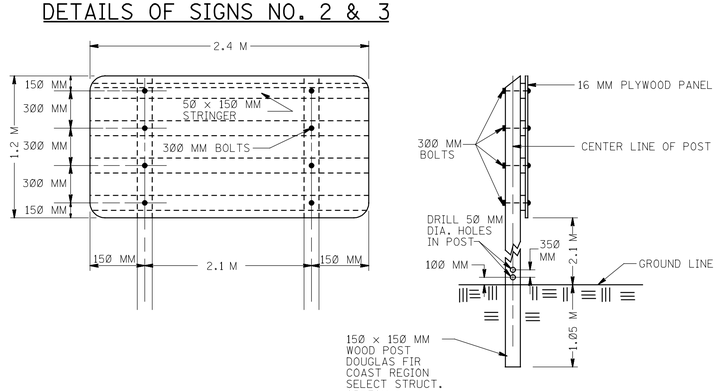

NOTES:

PLYWOOD PANELS SHALL COMFORM TO REQUIREMENTS FOR HIGH DENSITY OVERLAY AS SET FORTH IN COMMERCIAL STANDARD CS 45-60 FOR DOUGLAS FIR PLYWOOD AND ALL AMENDMENTS THERETO.

COSTS LISTED ON SIGNS TO BE FURNISHED BY ENGINEER AFTER AWARD OF CONTRACT.

SIGNS TO BE LOCATED AS SHOWN ON PLANS OR AS DIRECTED BY ENGINEER.

SHIELD TO COMFORM TO DETAILS SHOWN IN THE CURRENT" MANUAL ON UNIFORM TRAFFIC CONTROL DEVICES".

COLOR:
GREEN BACKGROUND WITH WHITE MESSAGE AND BORDER NOT REFLECTORIZED.

LEGEND:
SERIES "C" LETTERS - "YOUR HIGHWAY TAXES AT WORK" SERIES "D" LETTERS (BALANCE OF LETTERING).

CORNER RADIUS:
75 MM

INTERSTATE SHIELD:
RED, WHITE, AND BLUE

U.S. AND STATE SHIELDS:
BLACK ON WHITE

COUNTY SHIELDS:
GOLD ON BLUE

NOTE:

ON PROJECTS WITH NO FEDERAL FUNDING THE REFERENCE

FEDERAL HIGHWAY TRUST FUNDS
$0,000,000
U.S. DEPT. OF TRANSPORTATION
FEDERAL HIGHWAY ADMIN.

SHALL NOT BE INCLUDED ON THE SIGN.

NOTE:

USE MODIFIED DETAIL BELOW WHEN NJDOT TRUST FUNDS ARE APPLICABLE FOR SIGNS #2 AND #3 (LOWER RIGHT HAND CORNER OF SIGNS).

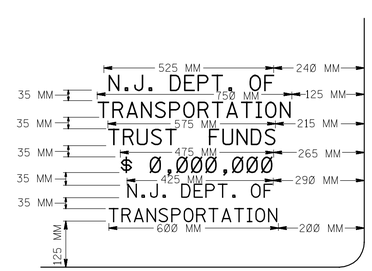

CD-617-9.1

NOTE: ALL DIMENSIONS SHOWN ON THIS SHEET ARE IN MILLIMETERS UNLESS OTHERWISE NOTED.

CONSTRUCTION IDENTIFICATION SIGNS

N.T.S.

CD-617-9

NEW JERSEY DEPARTMENT OF TRANSPORTATION

CONSTRUCTION DETAILS

RDC01D-4 - ORIGINAL SHEET

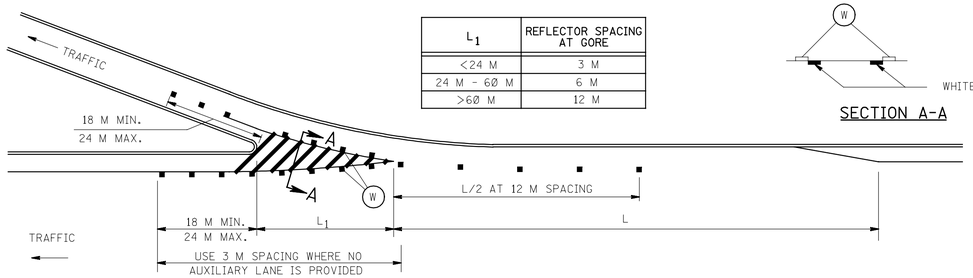

L_1	REFLECTOR SPACING AT GORE
<24 M	3 M
24 M - 60 M	6 M
>60 M	12 M

SECTION A-A

TYPICAL DECELERATION LANE TREATMENT

CD-618-1.1

LEGEND

(W) TWO-WAY PLOWABLE MONO-DIRECTIONAL WHITE PAVEMENT REFLECTOR

(A) TWO-WAY PLOWABLE MONO-DIRECTIONAL AMBER PAVEMENT REFLECTOR

CD-618-1.2

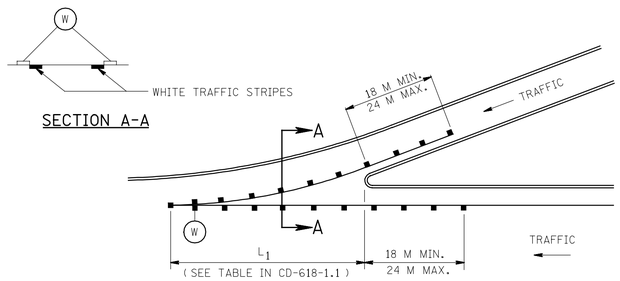

SECTION A-A

TYPICAL ACCELERATION LANE TREATMENT

CD-618-1.3

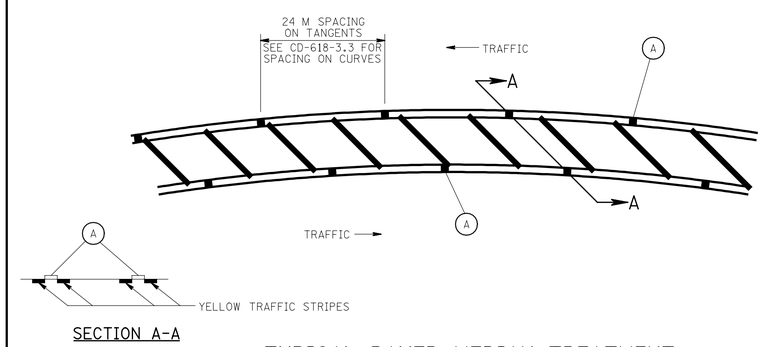

SECTION A-A

TYPICAL PAVED MEDIAN TREATMENT

CD-618-1.4

PLOWABLE PAVEMENT REFLECTOR LOCATION DETAILS

N.T.S.

CD-618-1

NEW JERSEY DEPARTMENT OF TRANSPORTATION

CONSTRUCTION DETAILS

NOTE: ALL DIMENSIONS SHOWN ON THIS SHEET ARE IN MILLIMETERS UNLESS OTHERWISE NOTED.

BDC01D-4 - ORIGINAL SHEET

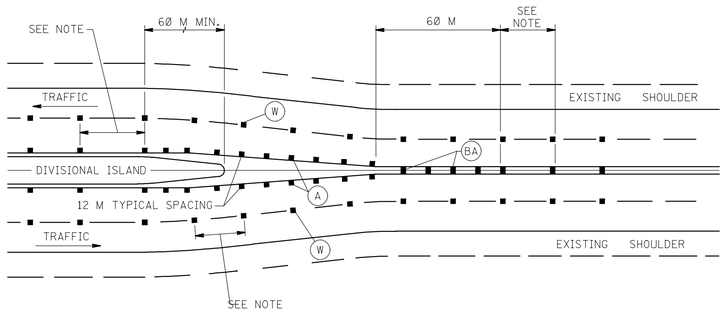

NOTE;

24 M SPACING ON TANGENT FOR SPACING ON CURVES SEE CD-618-3.3

TYPICAL DIVISIONAL ISLAND TREATMENT

CD-618-2.1

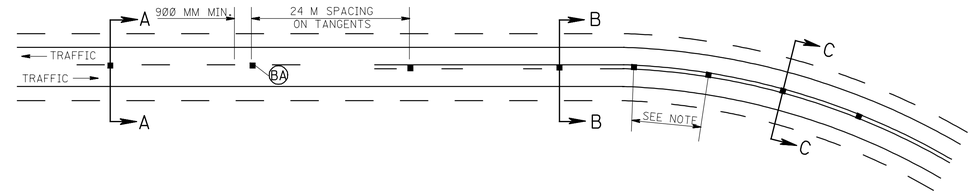

SECTION A-A

SECTION B-B

SECTION C-C

TYPICAL TWO LANE SECTION

NOTE;

FOR SPACING ON CURVES SEE CD-618-3.3

CD-618-2.4

LEGEND

- (W) TWO-WAY PLOWABLE MONO-DIRECTIONAL WHITE PAVEMENT REFLECTOR
- (A) TWO-WAY PLOWABLE MONO-DIRECTIONAL AMBER PAVEMENT REFLECTOR
- (BA) TWO-WAY PLOWABLE BI-DIRECTIONAL AMBER PAVEMENT REFLECTOR

CD-618-2.3

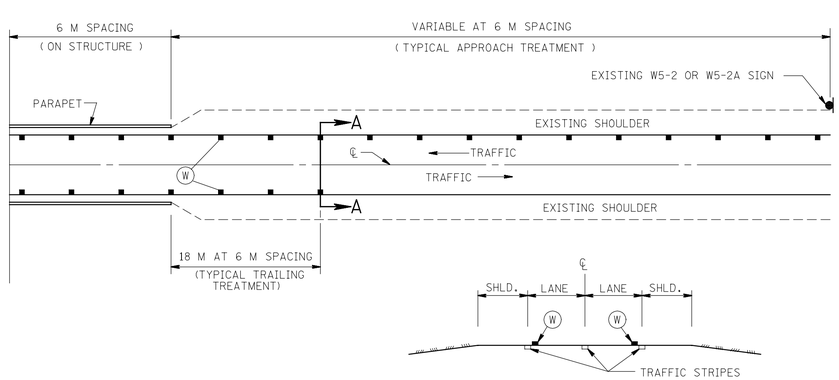

SECTION A-A

NARROW BRIDGE OR CULVERT TREATMENT

CD-618-2.2

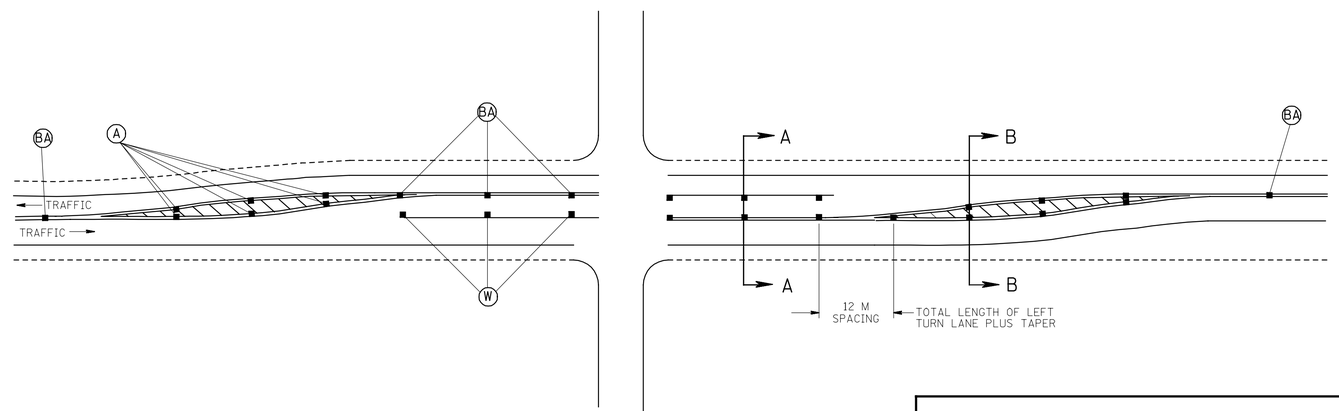

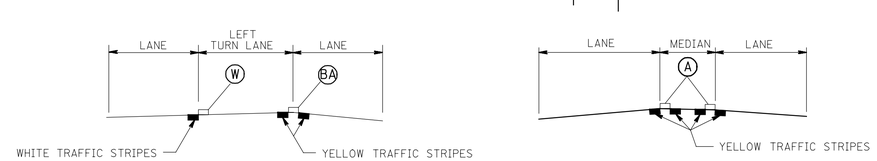

SECTION A-A

SECTION B-B

TYPICAL LEFT TURN LANE SECTION

CD-618-2.5

NOTE: ALL DIMENSIONS SHOWN ON THIS SHEET ARE IN MILLIMETERS UNLESS OTHERWISE NOTED.

PLOWABLE PAVEMENT REFLECTOR LOCATION DETAILS

N.T.S.

CD-618-2

NEW JERSEY DEPARTMENT OF TRANSPORTATION

CONSTRUCTION DETAILS

BDC01D-4 - ORIGINAL SHEET

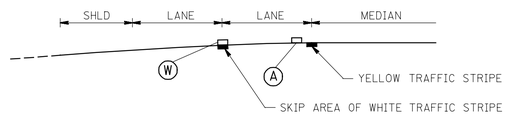

SECTION A-A (TYP.)

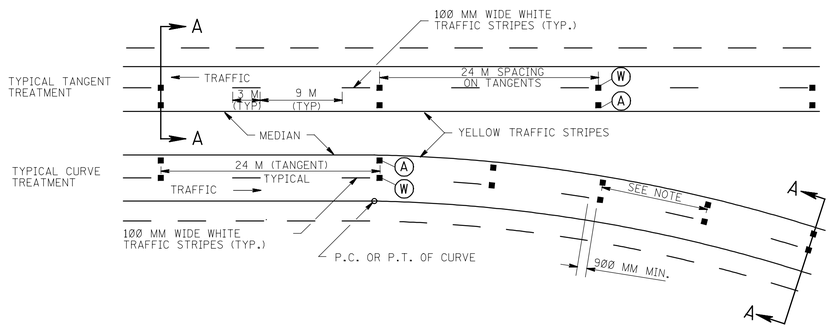

TYPICAL MULTI-LANE DIVIDED SECTION

NOTE:
FOR SPACING ON CURVES SEE CD-618-3.3

CD-618-3.1

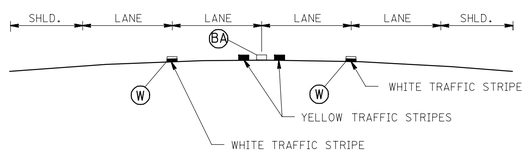

SECTION B-B

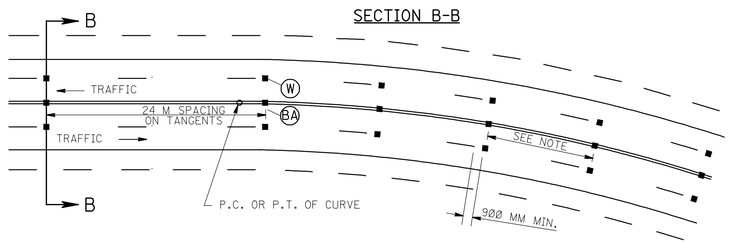

TYPICAL MULTI-LANE UNDIVIDED SECTION

NOTE:
FOR SPACING ON CURVES SEE CD-618-3.3

CD-618-3.2

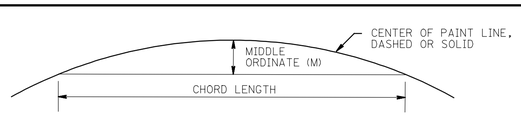

1. USE 60 M TAPE.
2. ESTABLISH 60 M CHORD.
3. MEASURE MIDDLE ORDINATE PERPENDICULAR TO CHORD 30 M FROM EITHER END.
4. DETERMINE SPACING FROM TABLE 1.
5. WHEN DIFFICULT TO DETERMINE MIDDLE ORDINATE, 24 M OR 12 M SPACING WILL BE AS DIRECTED BY THE ENGINEER.

CHORD LENGTH	MIDDLE ORDINATE	RADIUS	REFLECTOR SPACING
60 M	M ≥ 785 MM	R ≤ 582 M	12 M
60 M	M < 785 MM	R > 582 M	24 M

TABLE 1
< LESS THAN
> GREATER THAN
≤ EQUAL TO OR LESS THAN
≥ EQUAL TO OR GREATER THAN

METHOD FOR DETERMINING REFLECTOR SPACING ON HORIZONTAL CURVES

CD-618-3.3

LEGEND

- (W) TWO-WAY PLOWABLE MONO-DIRECTIONAL WHITE PAVEMENT REFLECTOR
- (A) TWO-WAY PLOWABLE MONO-DIRECTIONAL AMBER PAVEMENT REFLECTOR
- (BA) TWO-WAY PLOWABLE BI-DIRECTIONAL AMBER PAVEMENT REFLECTOR

CD-618-3.4

PLOWABLE PAVEMENT REFLECTOR LOCATION DETAILS

N.T.S.

NOTE: ALL DIMENSIONS SHOWN ON THIS SHEET ARE IN MILLIMETERS UNLESS OTHERWISE NOTED.

CD-618-3

NEW JERSEY DEPARTMENT OF TRANSPORTATION

CONSTRUCTION DETAILS

BDC01D-4 - ORIGINAL SHEET

M1 -1
1, 2 DIGITS - 600 x 600 MM
(0.4 S.M.)
3 DIGITS - 750 x 600 MM
(0.5 S.M.)

M1 - 1 (S)
1, 2 DIGITS - 900 x 900 MM
(0.8 S.M.)
3 DIGITS - 1 125 x 900 MM
(1.0 S.M.)

M1 - 4
1, 2 DIGITS - 600 x 600 MM
(0.4 S.M.)
3 DIGITS - 750 x 600 MM
(0.5 S.M.)

M1 - 4 (S)
1, 2 DIGITS - 900 x 900 MM
(0.8 S.M.)
3 DIGITS - 1 125 x 900 MM
(1.0 S.M.)

M1 - 5
1, 2 DIGITS - 600 x 600 MM
(0.4 S.M.)
3 DIGITS - 750 x 600 MM
(0.5 S.M.)

M1 - 5 (S)
1, 2 DIGITS - 900 x 900 MM
(0.8 S.M.)
3 DIGITS - 1 125 x 900 MM
(1.0 S.M.)

M1 - 6
1, 2, 3 DIGITS - 600 x 600 MM
(0.4 S.M.)

M1 -6 (S)
1, 2, 3 DIGITS - 900 x 900 MM
(0.8 S.M.)

NJTP - 1
600 x 600 MM
(0.4 S.M.)

NJTP - 1 (S)
900 x 900 MM
(0.8 S.M.)

GSP - 1
600 MM DIA.
(0.3 S.M.)

GSP - 1 (S)
900 MM DIA.
(0.6 S.M.)

M2 - 1
525 x 375 MM
(0.2 S.M.)

M2 - 1 (S)
800 x 575 MM
(0.5 S.M.)

M3 - 1
600 x 300 MM
(0.2 S.M.)

M3 - 1 (S)
900 x 450 MM
(0.4 S.M.)

M3 - 3
600 x 300 MM
(0.2 S.M.)

M3 - 3 (S)
900 x 450 MM
(0.4 S.M.)

(L or R)

M5 - 1
525 x 375 MM
(0.2 S.M.)

M5 - 1 (S)
800 x 575 MM
(0.5 S.M.)

(L or R)

M6 - 1
525 x 375 MM
(0.2 S.M.)

M6 - 1 (S)
800 x 575 MM
(0.5 S.M.)

M6 - 3
525 x 375 MM
(0.2 S.M.)

M6 - 3 (S)
800 x 575 MM
(0.5 S.M.)

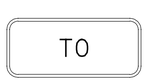

M4 - 5
600 x 300 MM
(0.2 S.M.)

M4 - 5 (S)
750 x 375 MM
(0.3 S.M.)

M3 - 2
600 x 300 MM
(0.2 S.M.)

M3 - 2 (S)
900 x 450 MM
(0.4 S.M.)

M3 - 4
600 x 300 MM
(0.2 S.M.)

M3 - 4 (S)
900 x 450 MM
(0.4 S.M.)

(L or R)

M5 - 2
525 x 375 MM
(0.2 S.M.)

M5 - 2 (S)
800 x 575 MM
(0.5 S.M.)

(L or R)

M6 - 2
525 x 375 MM
(0.2 S.M.)

M6 - 2 (S)
800 x 575 MM
(0.5 S.M.)

M6 - 4
525 x 375 MM
(0.2 S.M.)

M6 - 4 (S)
800 x 575 MM
(0.5 S.M.)

R3 - 5
750 x 900 MM
(0.7 S.M.)
OVERHEAD

R3 - 5
750 x 750 MM
(0.6 S.M.)
GROUND MOUNT

R3 - 8
750 x 750 MM
(0.6 S.M.)

R3 - 9 b
600 x 900 MM
(0.5 S.M.)

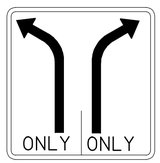

R(NJ)3 - 8B
750 x 750 MM
(0.6 S.M.)

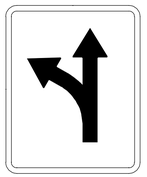

R3 - 6
750 x 900 MM
(0.7 S.M.)
OVERHEAD

R3 - 6
750 x 750 MM
(0.6 S.M.)
GROUND MOUNT

R3 - 9a
750 x 900 MM
(0.7 S.M.)

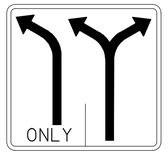

R(NJ)3 - 8A
900 x 750 MM
(0.7 S.M.)

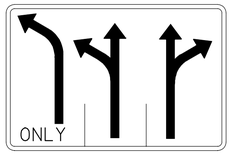

R(NJ)3 - 8C
1 200 x 750 MM
(0.9 S.M.)

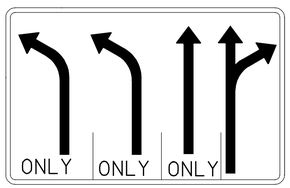

R(NJ)3 - 8D
1 500 x 750 MM
(1.1 S.M.)

R4 - 7
600 x 750 MM
(0.5 S.M.)

R4 - 7 (S)
900 x 1 200 MM
(1.1 S.M.)

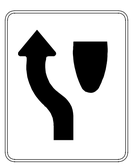

R4 - 8
600 x 750 MM
(0.5 S.M.)

R4 - 8 (S)
900 x 1 200 MM
(1.1 S.M.)

GENERAL NOTES;

DIMENSIONS, COLORS, AND DETAILS OF VARIOUS SIZE SIGNS, SHIELDS AND ACCESSORY PANELS TO FOLLOW STANDARDS IN THE CURRENT "STANDARD HIGHWAY SIGNS PUBLICATION" AND THE CURRENT "MANUAL ON UNIFORM TRAFFIC CONTROL DEVICES FOR STREETS AND HIGHWAYS".

(S) DENOTES A SPECIAL SIZE SIGN.

ALL SIGNS SHALL BE OF THE ENCAPSULATED LENS TYPE.

SIGNS
N.T.S.

CD-619-1

NEW JERSEY DEPARTMENT OF TRANSPORTATION

CONSTRUCTION DETAILS

CD-619-1.1

RD0010-4 - ORIGINAL SHEET

R1 - 1
750 x 750 MM
(0.6 S.M.)

R1 - 2
900 x 900 x 900 MM
(0.4 S.M.)

R3 - 1
600 x 600 MM
(0.4 S.M.)

R3 -1 (S)
750 x 750 MM
(0.6 S.M.)

R3 - 2
600 x 600 MM
(0.4 S.M.)

R3 -2 (S)
750 x 750 MM
(0.6 S.M.)

R3 - 3
600 x 600 MM
(0.4 S.M.)

R3 -3 (S)
750 x 750 MM
(0.6 S.M.)

R3 - 4
600 x 600 MM
(0.4 S.M.)

R3 -4 (S)
750 x 750 MM
(0.6 S.M.)

(L or R)
R3 - 7
750 x 750 MM
(0.6 S.M.)

R5 - 1
750 x 750 MM
(0.6 S.M.)

R5 -1 (S)
900 x 900 MM
(0.8 S.M.)

R5 - 1a
900 x 600 MM
(0.5 S.M.)

R5 - 1a (S)
750 x 450 MM
(0.3 S.M.)

(L or R)
R6 - 1
900 x 300 MM
(0.3 S.M.)

R10 - 11a
600 x 750 MM
(0.5 S.M.)

R2 - 1
600 x 750 MM
(0.5 S.M.)

R2 - 1 (EXPWY)
900 x 1 200 MM
(1.1 S.M.)

R2 - 1 (S)
1 200 x 1 500 MM
(1.8 S.M.)

(L OR R)
W1 - 1
750 x 750 MM
(0.6 S.M.)

W1 - 1 (S)
900 x 900 MM
(0.8 S.M.)

(L OR R)
W1 - 2
750 x 750 MM
(0.6 S.M.)

W1 - 2 (S)
900 x 900 MM
(0.8 S.M.)

(L OR R)
W1 - 3
750 x 750 MM
(0.6 S.M.)

W1 - 3 (S)
900 x 900 MM
(0.8 S.M.)

(L OR R)
W1 - 4
750 x 750 MM
(0.6 S.M.)

W1 - 4 (S)
900 x 900 MM
(0.8 S.M.)

(L OR R)
W1 - 5
750 x 750 MM
(0.6 S.M.)

W1 - 5 (S)
900 x 900 MM
(0.8 S.M.)

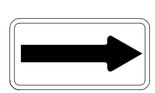

(L OR R)
W1 - 6
1 200 x 600 MM
(0.7 S.M.)

W1 - 6 (S)
1 500 x 750 MM
(1.1 S.M.)

W1 - 7
1 200 x 600 MM
(0.7 S.M.)

W1 - 7 (S)
1 500 x 750 MM
(1.1 S.M.)

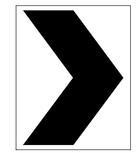

(L OR R)
W1 - 8
450 x 600 MM
(0.3 S.M.)

W1 - 8 (S)
600 x 750 MM
(0.5 S.M.)

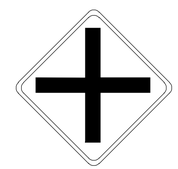

W2 - 1
750 x 750 MM
(0.6 S.M.)

W2 - 1 (S)
900 x 900 MM
(0.8 S.M.)

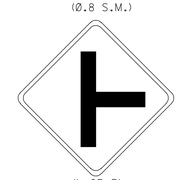

(L OR R)
W2 - 2
750 x 750 MM
(0.6 S.M.)

W2 - 2 (S)
900 x 900 MM
(0.8 S.M.)

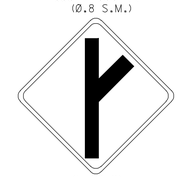

(L OR R)
W2 - 3
750 x 750 MM
(0.6 S.M.)

W2 - 3 (S)
900 x 900 MM
(0.8 S.M.)

W2 - 5
750 x 750 MM
(0.6 S.M.)

W2 - 5 (S)
900 x 900 MM
(0.8 S.M.)

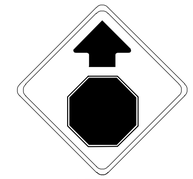

W3 - 1a
900 x 900 MM
(0.8 S.M.)

W3 - 1a (S)
1 200 x 1 200 MM
(1.4 S.M.)

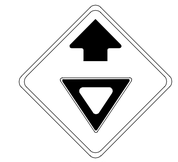

W3 - 2a
900 x 900 MM
(0.8 S.M.)

W3 - 2a (S)
1 200 x 1 200 MM
(1.4 S.M.)

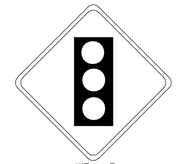

W3 - 3
900 x 900 MM
(0.8 S.M.)

W3 - 3 (S)
1 200 x 1 200 MM
(1.4 S.M.)

W4 - 1
750 x 750 MM
(0.6 S.M.)

W4 - 1 (S)
1 200 x 1 200 MM
(1.4 S.M.)

W4 - 1 (EXPWY)
900 x 900 MM
(0.8 S.M.)

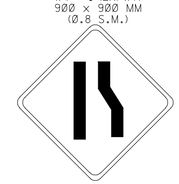

(L OR R)
W4 - 2
900 x 900 MM
(0.8 S.M.)

W4 - 2 (S)
1 200 x 1 200 MM
(1.4 S.M.)

(L OR R)
W4 - 3
900 x 900 MM
(0.8 S.M.)

W4 - 3 (S)
1 200 x 1 200 MM
(1.4 S.M.)

GENERAL NOTES:

DIMENSIONS, COLORS, AND DETAILS OF VARIOUS SIZE SIGNS, SHIELDS AND ACCESSORY PANELS TO FOLLOW STANDARDS IN THE CURRENT "STANDARD HIGHWAY SIGNS PUBLICATION" AND THE CURRENT "MANUAL ON UNIFORM TRAFFIC CONTROL DEVICES FOR STREETS AND HIGHWAYS".

(S) DENOTES A SPECIAL SIZE SIGN.

ALL SIGNS SHALL BE OF THE ENCAPSULATED LENS TYPE.

CD-619-2.1

NOTE: ALL DIMENSIONS SHOWN ON THIS SHEET ARE IN MILLIMETERS UNLESS OTHERWISE NOTED.

SIGNS
N.T.S.

CD-619-2

NEW JERSEY DEPARTMENT OF TRANSPORTATION

CONSTRUCTION DETAILS

BDC01D-4 - ORIGINAL SHEET

W5 - 1
900 x 900 MM
(0.8 S.M.)

W5 - 1 (S)
1 200 x 1 200 MM
(1.4 S.M.)

W5 - 2
750 x 750 MM
(0.6 S.M.)

W5 - 2 (S)
900 x 900 MM
(0.8 S.M.)

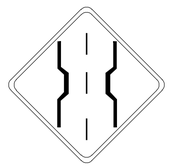

W5 - 2a
750 x 750 MM
(0.6 S.M.)

W5 - 2a (S)
900 x 900 MM
(0.8 S.M.)

W6 - 1
900 x 900 MM
(0.8 S.M.)

W6 - 1 (S)
1 200 x 1 200 MM
(1.4 S.M.)

W6 - 2
900 x 900 MM
(0.8 S.M.)

W6 - 2 (S)
1 200 x 1 200 MM
(1.4 S.M.)

W6 - 3
750 x 750 MM
(0.6 S.M.)

W6 - 3 (S)
900 x 900 MM
(0.8 S.M.)

W8 - 5
750 x 750 MM
(0.6 S.M.)

W8 - 5 (S)
900 x 900 MM
(0.8 S.M.)

(L OR R)

W9 - 1
900 x 900 MM
(0.8 S.M.)

W9 - 1 (S)
1 200 x 1 200 MM
(1.4 S.M.)

(L OR R)

W9 - 2
900 x 900 MM
(0.8 S.M.)

W9 - 2 (S)
1 200 x 1 200 MM
(1.4 S.M.)

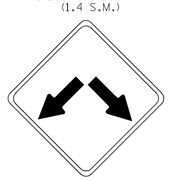

W12 - 1
600 x 600 MM
(0.4 S.M.)

W12 - 1 (S)
750 x 750 MM
(0.6 S.M.)

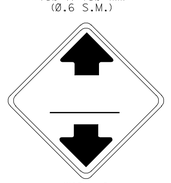

W12 - 2
900 x 900 MM
(0.8 S.M.)

W12 - 2 (S)
1 200 x 1 200 MM
(1.4 S.M.)

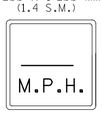

W13 - 1
450 x 450 MM
(0.2 S.M.)

W13 - 1 (S)
600 x 600 MM
(0.4 S.M.)

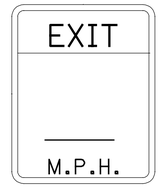

W13 - 2
1 200 x 1 500 MM
(1.8 S.M.)

W13 - 2(EXPWY)
900 x 1 200 MM
(1.1 S.M.)

W13 - 2 (S)
600 x 750 MM
(0.5 S.M.)

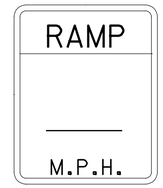

W13 - 3
1 200 x 1 500 MM
(1.8 S.M.)

W13 - 3(EXPWY)
900 x 1 200 MM
(1.1 S.M.)

W13 - 3 (S)
600 x 750 MM
(0.5 S.M.)

W14 - 1
750 x 750 MM
(0.6 S.M.)

W14 - 1 (S)
900 x 900 MM
(0.8 S.M.)

W14 - 2
750 x 750 MM
(0.6 S.M.)

W14 - 2 (S)
900 x 900 MM
(0.8 S.M.)

W14 - 3
900 x 1 200 x 1 200 MM
(0.5 S.M.)

W14 - 3 (S)
1 200 x 1 600 x 1 600 MM
(0.9 S.M.)

W10 - 1
900 MM DIA.
(0.6 S.M.)

GENERAL NOTES:

DIMENSIONS, COLORS, AND DETAILS OF VARIOUS SIZE SIGNS, SHIELDS AND ACCESSORY PANELS TO FOLLOW STANDARDS IN THE CURRENT "STANDARD HIGHWAY SIGNS PUBLICATION" AND THE CURRENT "MANUAL ON UNIFORM TRAFFIC CONTROL DEVICES FOR STREETS AND HIGHWAYS".

(S) DENOTES A SPECIAL SIZE SIGN.

ALL SIGNS SHALL BE OF THE ENCAPSULATED LENS TYPE.

SIGNS
N.T.S.

CD-619-3.1

NOTE: ALL DIMENSIONS SHOWN ON THIS SHEET ARE IN MILLIMETERS UNLESS OTHERWISE NOTED.

CD-619-3

NEW JERSEY DEPARTMENT OF TRANSPORTATION

CONSTRUCTION DETAILS

RDC01D-4 - ORIGINAL SHEET

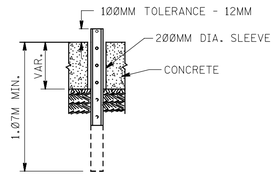

CONCRETE INSTALLATION

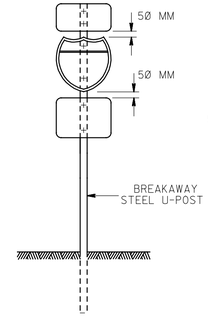

600 x 600 MM SHIELD

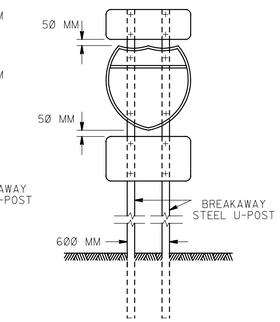

900 x 900 MM SHIELD

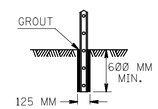

ROCK INSTALLATION

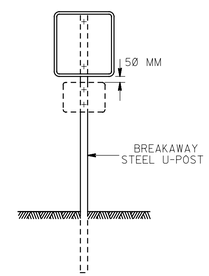

750 x 750 MM OR SMALLER

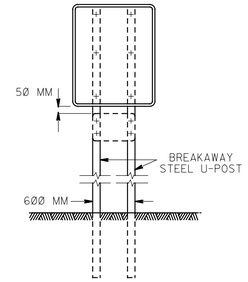

900 x 900 MM OR LARGER

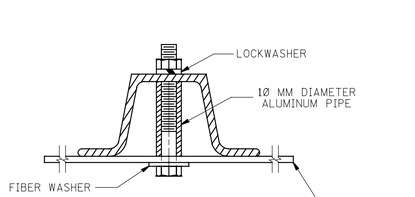

FRONT MOUNT

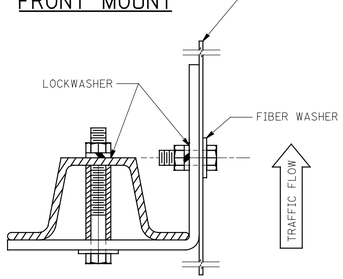

SIDE MOUNTING BRACKET

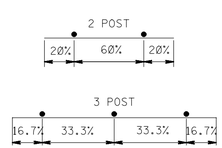

STEEL U-POST SPACING

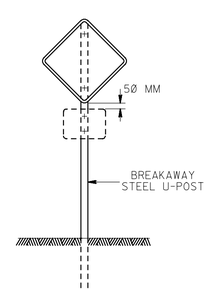

750 x 750 MM OR SMALLER

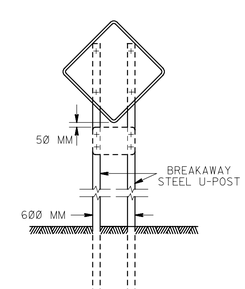

900 x 900 MM OR LARGER

GENERAL NOTES :

1. ALL POSTS SHALL BE OF ADEQUATE LENGTH TO MEET THE REQUIREMENTS FOR ERECTION AS STATED IN THE CURRENT "MANUAL ON UNIFORM TRAFFIC CONTROL DEVICES FOR STREETS AND HIGHWAYS" AND AS INDICATED BELOW.
2. ALL SMALL SIGN SUPPORTS SHALL BE OF THE BREAKAWAY TYPE WITH EXCEPTION OF THOSE INSTALLED BEHIND GUIDERAIL OR OTHER ROADSIDE BARRIER.
3. ALL STEEL POSTS AND BRACKETS SHALL BE CUT, BENT AND HOLES PUNCHED AND DRILLED BEFORE GALVANIZING. GALVANIZING SHALL BE IN CONFORMANCE WITH CURRENT A.S.T.M. A 123.
4. ALL STEEL U-POST SIGN SUPPORTS MUST BE INSTALLED FACING THE PREDOMINANT TRAFFIC FLOW. A MOUNTING BRACKET SHOULD BE USED ON SIDE MOUNTED SIGNS SUCH AS "ONE WAY" SIGNS INSTALLED IN MEDIANS.
5. SIGN PANEL SIZES SHALL DETERMINE POST TYPE AND NUMBER AS SHOWN ON THIS DETAIL.
6. BOLTS SHALL NOT PROTRUDE MORE THAN 20 MILLIMETERS BEYOND THE NUT WHEN TIGHT, BUT SHALL ENGAGE ALL THREADS IN THE NUT.
7. WHEN SIGNS ARE INSTALLED ON SLOPES 1V:10H OR FLATTER THE MINIMUM VERTICAL CLEARANCE REQUIREMENTS FOR SIGNS ARE:

   FOR SINGLE POST INSTALLATIONS' THE MINIMUM DISTANCE BETWEEN THE EDGE OF THE PAVEMENT AND THE BOTTOM OF ANY PANEL MUST BE 2.1M AND THE MINIMUM DISTANCE FROM EDGE OF PAVEMENT TO THE TOP OF ANY SIGN PANEL MUST BE 2.7M.

   FOR MULTI-POST INSTALLATIONS THE MINIMUM DISTANCE BETWEEN THE EDGE OF PAVEMENT AND THE BOTTOM OF A MAJOR SIGN PANEL MUST BE 2.1M.

   SECONDARY SIGN PANELS
   LAND SERVICE HIGHWAYS:
   THE MINIMUM DISTANCE BETWEEN THE EDGE OF PAVEMENT AND THE BOTTOM OF A SECONDARY SIGN PANEL IS 1.8M.
   FOR INTERSTATE AND FREEWAYS:
   THE BOTTOM OF THE MAJOR SIGN SHALL BE A MINIMUM OF 2.4M AND THE SECONDARY SIGN PANEL A MINIMUM OF 1.5M ABOVE THE EDGE OF PAVEMENT.

   WHERE GRADING OF 1V:10H OR FLATTER CANNOT BE OBTAINED OR WHERE CURB OR BERM IS GREATER THAN 100MM THE MINIMUM VERTICAL CLEARANCE WILL BE MEASURED FROM THE GROUND LINE TO THE BOTTOM OF THE SIGN.
8. PERMANENT SIGN SUPPORTS SHOULD NOT BE INSTALLED ON SLOPES GREATER THAN 1V:10H, EXCEPT WHERE GRADING OF 1V:10H CANNOT BE OBTAINED OR THE SIGN SUPPORTS WILL BE BEHIND A TRAFFIC BARRIER. THE SLOPE SHALL EXTEND A MINIMUM OF 1M BEYOND THE OUTSIDE EDGE OF SIGN (SEE GRADING DETAIL FOR SLOPE TREATMENT).
9. EXTRUDED ALUMINUM SIGN PANELS ARE NOT PERMITTED FOR USE WITH STEEL U-POST SIGN SUPPORTS.
10. STEEL U-POST SIGN SUPPORTS SHALL NOT BE PLACED IN FRONT OF GUIDE RAIL AND THE POSTS MUST NOT STRADDLE GUIDE RAIL.
11. TO EXTEND THE HEIGHT OF A SIGN POST, A MAXIMUM OF ONE SPLICE MAY BE MADE AND MUST BE A MINIMUM OF 2.7M FROM THE GROUNDLINE TO CENTER LINE OF SPLICE.

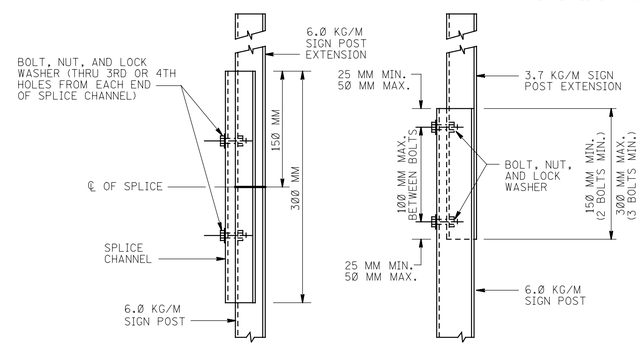

SIGN POST EXTENSION SPLICE DETAILS

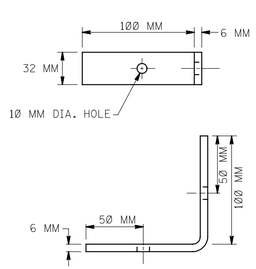

DETAIL OF BRACKET FOR SIDE MOUNTED SIGNS

PANEL SIZE (W x H)	# OF POSTS	POST SIZE (KG/M)
450 x 450	1	3.7
450 x 600	1	3.7
600 x 600	1	3.7
600 x 750	1	3.7
600 x 900	1	3.7
750 x 600	1	3.7
750 x 750	1	3.7
900 x 300	2	3.7
900x900x900	2	3.7
750 x 900	1	6.0

PANEL SIZE (W x H)	# OF POSTS	POST SIZE (KG/M)
900 x 900	2	3.7
900 x 1200	2	3.7
1250 x 900	2	3.7
1200 x 600	2	3.7
1200 x 900	2	3.7
1200 x 1200	2	6.0
1200x1600x1600	2	3.7
1500 x 900	2	6.0
1200 x 1500	2	6.0
1500 x 750	2	3.7

POST SELECTION TABLE

BREAKAWAY SIGN SUPPORT

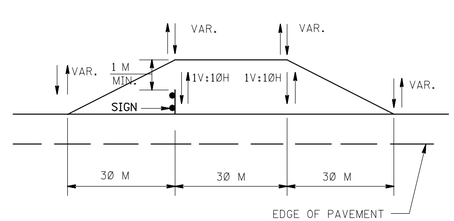

STEEL U-POST GRADING DETAIL

STEEL U-POST SIGN SUPPORTS

N.T.S.

CD-619-4

NEW JERSEY DEPARTMENT OF TRANSPORTATION

CONSTRUCTION DETAILS

CD-619-4.1

BDC010-4 - ORIGINAL SHEET

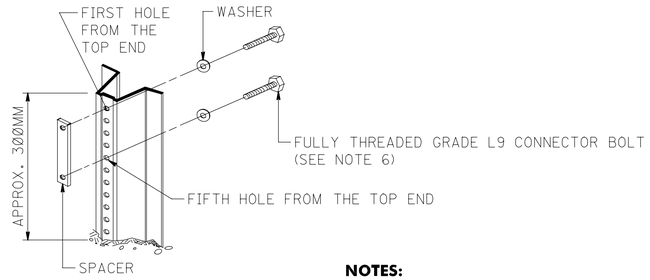

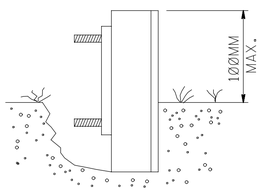

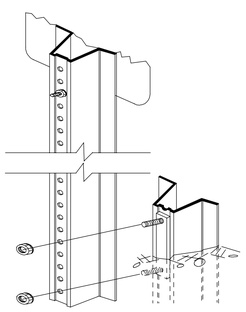

NOTES:

1. DRIVE ANCHOR POST ASSEMBLY TO WITHIN APPROXIMATELY 300MM ABOVE GROUND LEVEL. PLACE BOLT AND WASHER IN FIRST AND FIFTH HOLES FROM THE TOP END, AND SECURELY TIGHTEN BOLTS ONTO THREADED SPACER.
2. DRIVE ANCHOR POST ASSEMBLY TO WITHIN A MAXIMUM OF 100MM ABOVE GROUND LEVEL.
3. DIG OUT AROUND BACK OF ANCHOR POST ASSEMBLY TO ALLOW ROOM FOR TOP POST TO BE ATTACHED.
4. NEST TOP POST ASSEMBLY ONTO PROTRUDING ANCHOR POST ASSEMBLY BOLTS, THROUGH THE FIRST AND FIFTH HOLES FROM THE BOTTOM OF THE TOP POST.
5. PLACE AND TIGHTEN A SELF-LOCKING FLANGE NUT ON EACH BOLT. WHEN INSTALLATION IS COMPLETE, TOP OF GROUND POST SHALL NOT EXCEED 100MM ABOVE GROUND LEVEL.
6. SIZE OF CONNECTOR BOLT FOR TYPE 1, 8 × 38
   SIZE OF CONNECTOR BOLT FOR TYPE 2, 8 × 50

NOTE:
THE CONNECTOR BOLTS AND SPACERS SHALL BE FULLY THREADED. EACH CONNECTOR BOLT AND NUT SHALL BE CLEARLY STAMPED WITH MANUFACTURER'S IDENTIFYING MARK.

ANCHOR POST ASSEMBLY SIGN SUPPORTS

CD-619-5.2

WEIGHT * KG /M	DIMENSIONS (MM)				AREA MM 2	X-X AXIS **		Y-Y AXIS	
	"A"	"B"	"C"	"D"		I(MM 4)	S(MM 3)	I(MM 4)	S(MM 3)
3.7	38.506	77.775	32.461	16.993	489.7	94900	5129	224348	5768
6.0	49.987	88.900	33.934	21.184	765.8	254317	11586	483244	10881

* ± 5%
** GOVERNING SECTION

TYPE 1 STEEL U-POST PROPERTIES

WEIGHT * KG/M	DIMENSIONS (MM)				AREA MM 2	X-X AXIS **		Y-Y AXIS	
	"A"	"B"	"C"	"D"		I(MM 4)	S(MM 3)	I(MM 4)	S(MM 3)
3.7	39.675	79.375	31.750	15.875	482.6	96982	4736	229343	5785
6.0	44.450	88.900	42.443	18.237	767.7	208115	9177	495315	11307

* ± 5%
** GOVERNING SECTION

TYPE 2 STEEL U-POST PROPERTIES

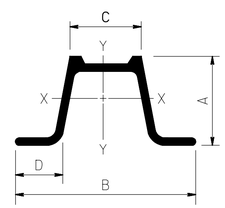

TYPE 1 STEEL U-POST

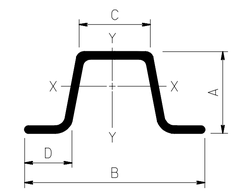

TYPE 2 STEEL U-POST

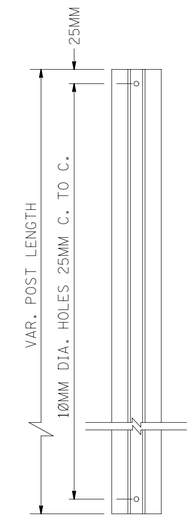

TOP POST U-POST

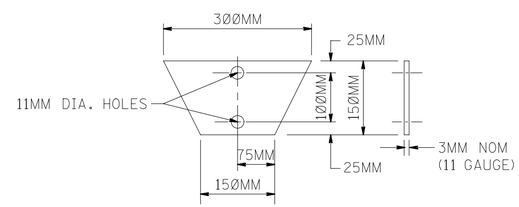

TYPE 1 SOIL ANCHOR PLATE

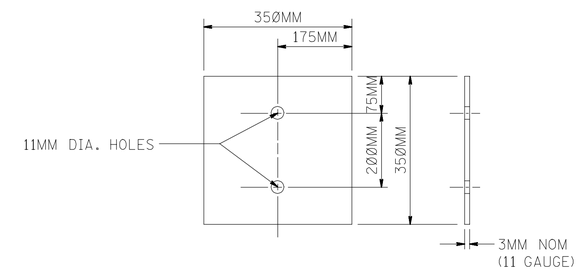

TYPE 2 SOIL ANCHOR PLATE

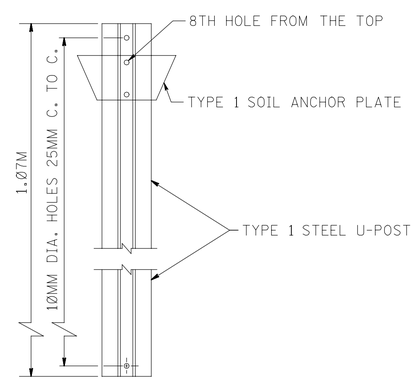

TYPE 1 ANCHOR POST ASSEMBLY

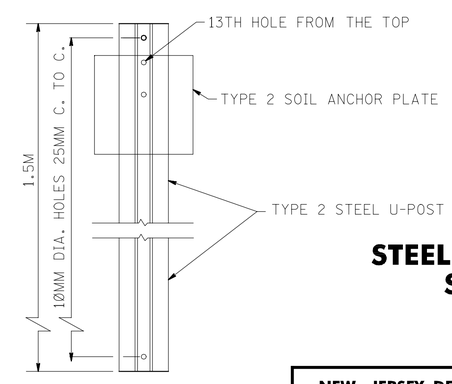

TYPE 2 ANCHOR POST ASSEMBLY

NOTES:

1. ANCHOR POST AND TOP POST SHALL BE OF EQUAL WEIGHT/METER.
2. SOIL ANCHOR PLATE SHALL BE ATTACHED TO ALL ANCHOR POSTS.
3. THE MATERIAL FOR THE SOIL ANCHOR PLATES SHALL BE CARBON SHEET STEEL.

STEEL POSTS, POST CLIPS, SPACING, ETC. AND TWO PIECE STEEL U-POSTS.

CD-619-5.1

STEEL U-POST SIGN SUPPORTS

N.T.S.

CD-619-5

NEW JERSEY DEPARTMENT OF TRANSPORTATION

CONSTRUCTION DETAILS

BDC01D-4 - ORIGINAL SHEET

BDCØ1D-4 - ORIGINAL SHEET

STEEL U-POST SIGN SUPPORT DATA TABLE

IDENTIFICATION		OFFSET	PANEL SIZE		NO. OF POSTS	POST HEIGHT			POST SIZE	POST TYPE
NO.	STATION	X_1	W	B_1		P_1	P_2	P_3		

NOTE TO DESIGNER:

THIS SHEET REQUIRES DESIGN SPECIFIC INFORMATION TO BE ADDED AND INCLUDED IN THE CONTRACT PLANS.

REMOVE THIS NOTE AFTER DESIGN SPECIFIC INFORMATION IS ADDED.

STEEL POSTS, POST CLIPS, SPACING, ETC.
AND TWO PIECE STEEL U-POSTS.

STEEL U-POST SIGN SUPPORTS

N.T.S.

CD-619-6.1

CD-619-6

NEW JERSEY DEPARTMENT OF TRANSPORTATION

CONSTRUCTION DETAILS

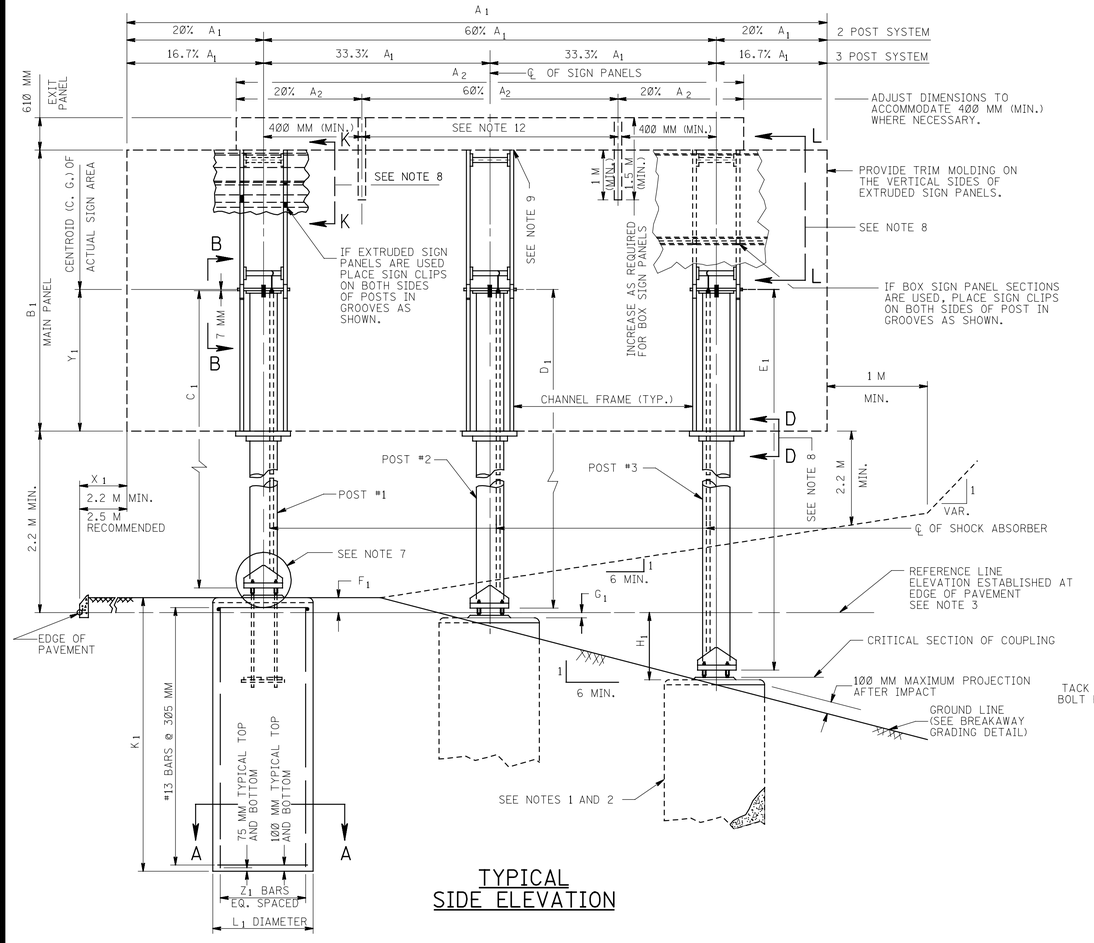

TYPICAL
SIDE ELEVATION

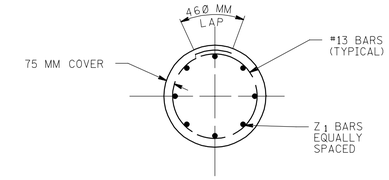

SECTION A-A

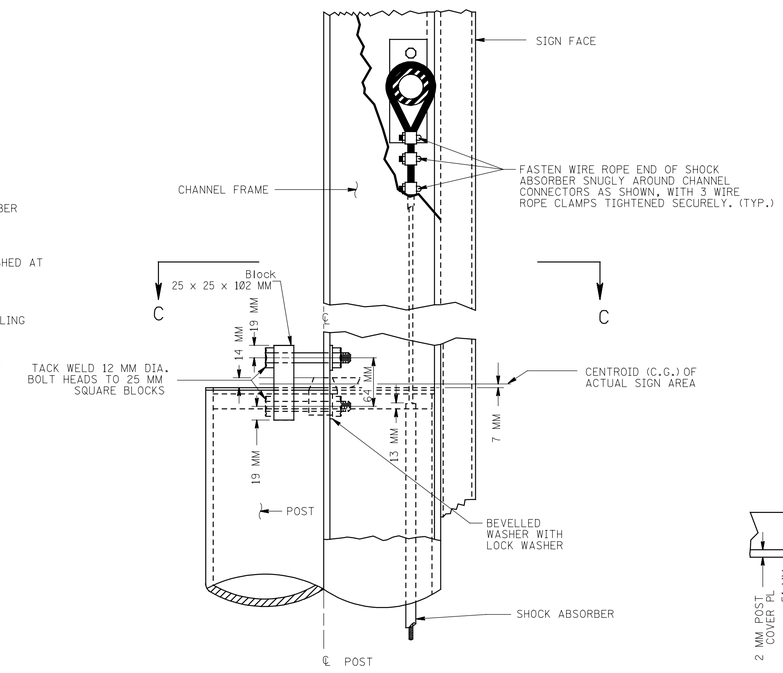

SECTION B-B

GENERAL NOTES :

1. USE CLASS B CONCRETE IN ALL FOOTINGS, AS SPECIFIED IN SECTION 914 OF THE STANDARD SPECIFICATIONS- (f'_c = 21 MPa).
2. ALL FOOTINGS SHALL BE PLACED AGAINST UNDISTURBED EARTH, EXCEPT FOR FOOTING TOPS WHICH SHALL BE FORMED TO A DEPTH OF 75 MM BELOW GROUND LINE.
3. TOPS OF FOOTINGS ABOVE REFERENCE LINE ARE INDICATED BY PLUS (+) VALUE, AND BELOW BY MINUS (-) VALUE.
4. ALL MATERIAL SHALL BE ALUMINUM ALLOY 6061-T6 UNLESS OTHERWISE NOTED.
5. NUTS, BOLTS AND FLAT WASHERS SHALL BE MADE FROM ALUMINUM ALLOY ALCLAD 2024-T4. SPRING LOCK WASHERS SHALL BE MADE FROM ALUMINUM ALLOY 7075-T6.
6. WELDING OF ALUMINUM SHALL BE AS SPECIFIED IN THE CONSTRUCTION SPECIFICATIONS.
7. FOR DETAIL OF POST BASE AND INSTALLATION REFER TO "BREAKAWAY SIGN SUPPORTS FOR GROUND MOUNTED SIGNS-CD-619-9".
8. FOR DETAILS OF SECTIONS "C-C", "D-D", "K-K" AND "L-L" REFER TO "BREAKAWAY SIGN SUPPORTS FOR GROUND MOUNTED SIGNS-CD-619-8".
9. SIGNS WITHOUT EXIT PANELS OR SIGNS WITH PARTIAL WIDTH EXIT PANELS SHALL BE PROVIDED WITH CHANNEL FRAMES EXTENDING TO THE TOP OF THE MAIN PANEL AS SHOWN. CHANNEL FRAMES SHALL BE EXTENDED TO THE TOP OF THE EXIT PANEL WHEN FULL WIDTH EXIT PANELS ARE EMPLOYED.
10. UNUSUAL FOUNDATION CONDITIONS MAY REQUIRE RE-DESIGNING OF FOOTINGS AND SUCH CONDITIONS SHALL BE BROUGHT TO THE ATTENTION OF THE ENGINEER.
11. FOR Z_1, L_1 & K_1, REFER TO CD-619-12 "SIGN SUPPORT DATA TABLE".
12. PROVIDE 100 [2.662 FOR PARTIAL WIDTH EXIT PANELS ONLY. USE CONNECTION DETAILS AS EMPLOYED FOR CHANNEL FRAME.
13. FOR S_1, SEE CD-619-8.
14. ALL DIMENSIONS ON THIS SHEET ARE IN MILLIMETERS UNLESS OTHERWISE NOTED.

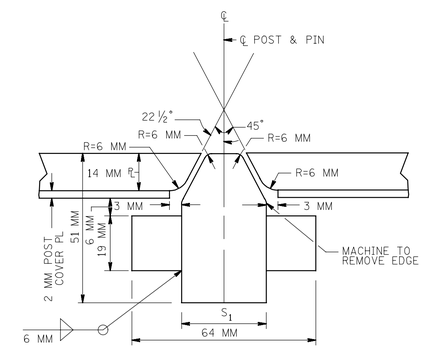

PIN DETAIL

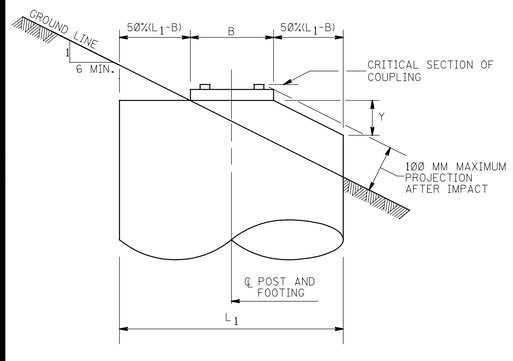

FOOTING BEVEL DETAIL
(BEND REINFORCEMENT TO FIT)

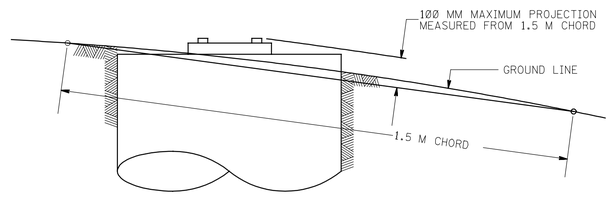

FOOTING/STUB PROJECTION
DETAIL

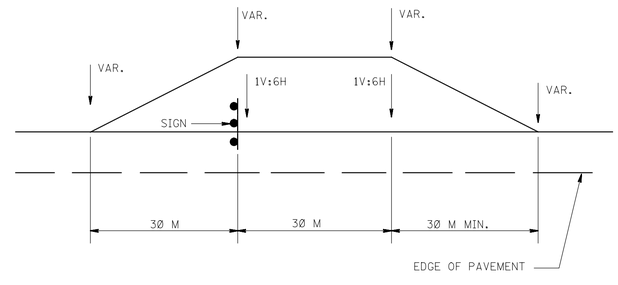

BREAKAWAY GRADING DETAIL

BREAKAWAY SIGN SUPPORTS FOR GROUND MOUNTED SIGNS

N.T.S.

CD-619-7

NEW JERSEY DEPARTMENT OF TRANSPORTATION

CONSTRUCTION DETAILS

RD2010-4 - ORIGINAL SHEET

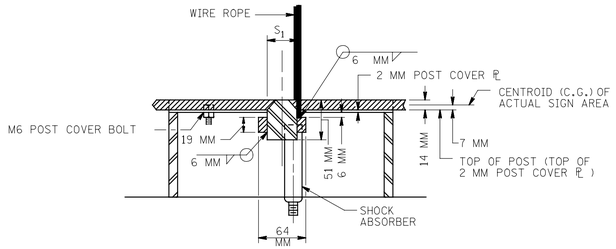

SECTION E-E

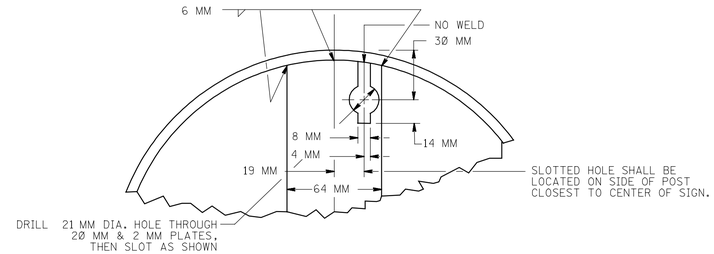

DETAIL - R

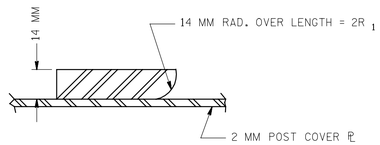

SECTION J-J

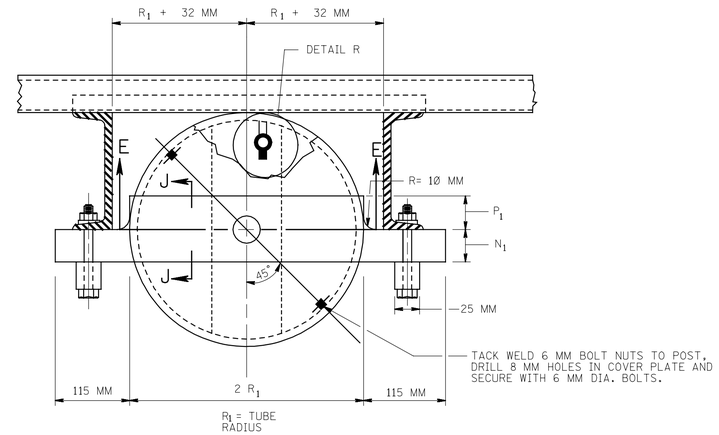

SECTION C-C

BASE TYPE	ALL DIMENSIONS IN MM		
	N_1	P_1	S_1
2	29	29	25
3	38	38	32
4	48	44	35
5	51	57	38

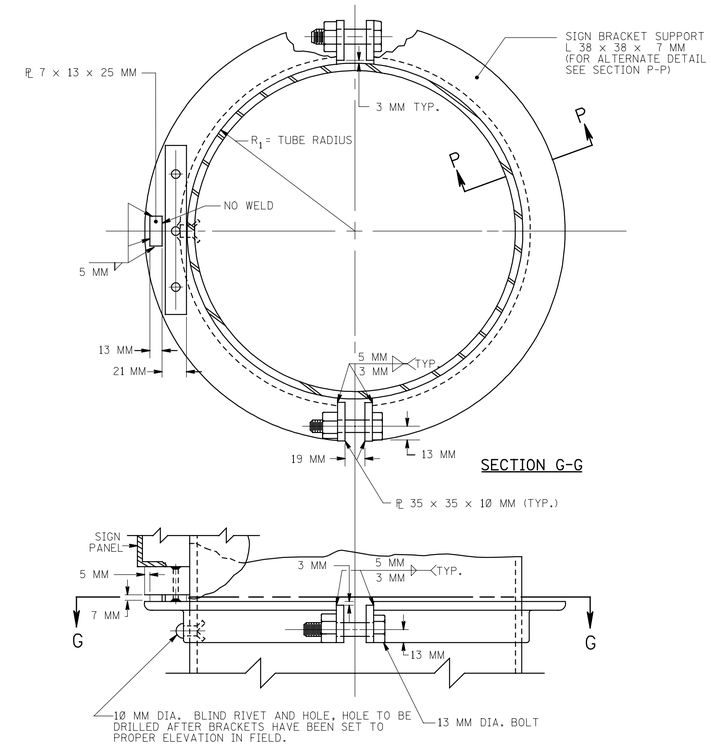

SECTION G-G

SECTION D-D

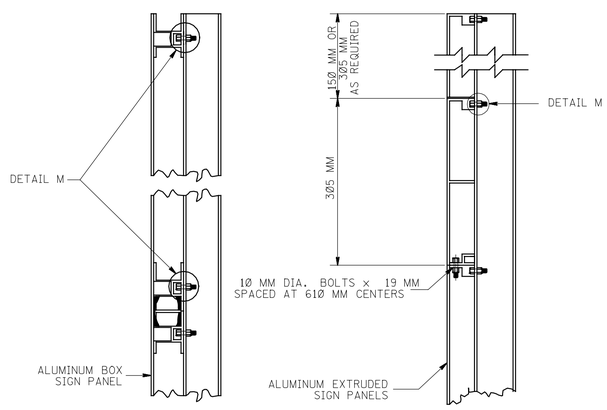

SECTION L-L

SECTION K-K

(EXIT PANEL NOT SHOWN IN SECTIONS L-L & K-K)

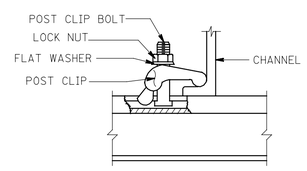

DETAIL - M

SIGN ATTACHMENT

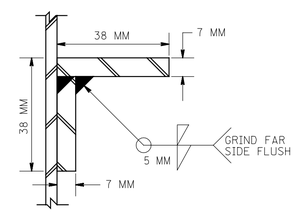

SECTION P-P

(ALTERNATE DETAIL)

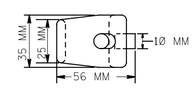

PLAN

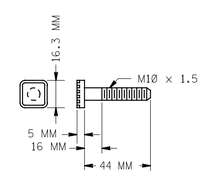

POST CLIP BOLT

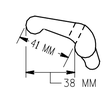

ELEVATION

POST CLIP

GENERAL NOTES :

1. ALL DIMENSIONS ON THIS SHEET ARE IN MILLIMETERS UNLESS OTHERWISE NOTED.

BREAKAWAY SIGN SUPPORTS FOR GROUND MOUNTED SIGNS

N.T.S

CD-619-8

NEW JERSEY DEPARTMENT OF TRANSPORTATION

CONSTRUCTION DETAILS

CD-619-8.1

BDC01D-4 - ORIGINAL SHEET

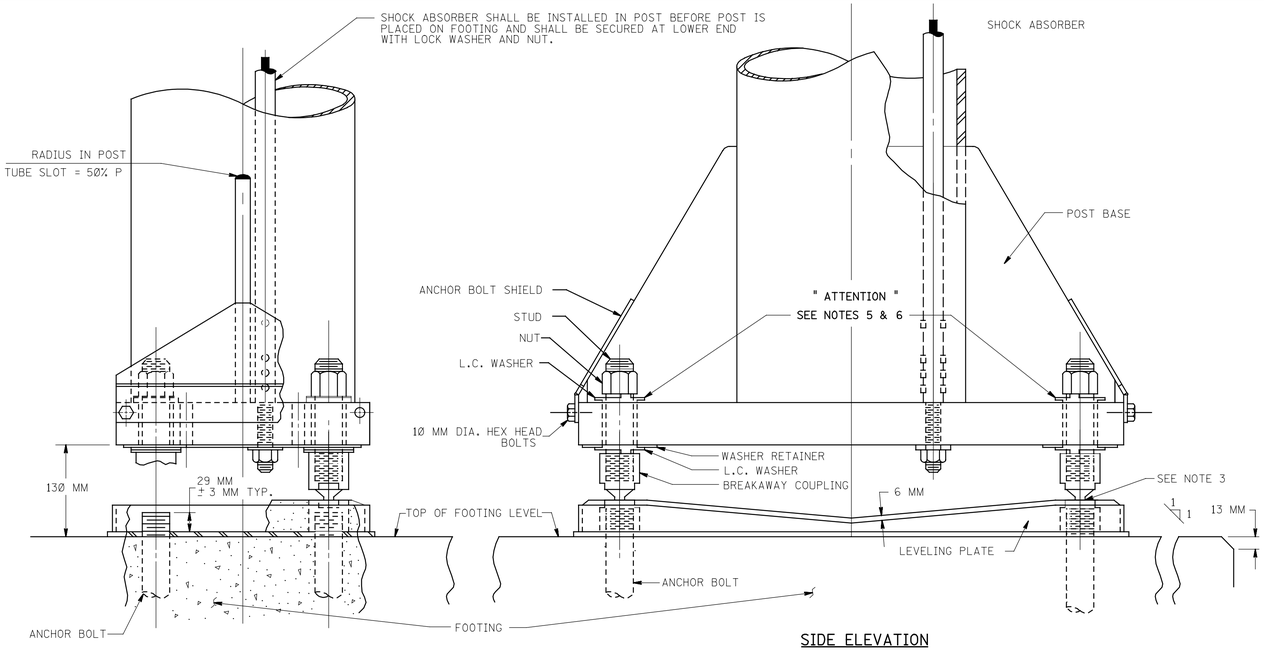

FRONT ELEVATION

SIDE ELEVATION

BREAKAWAY COUPLING INSTALLATION

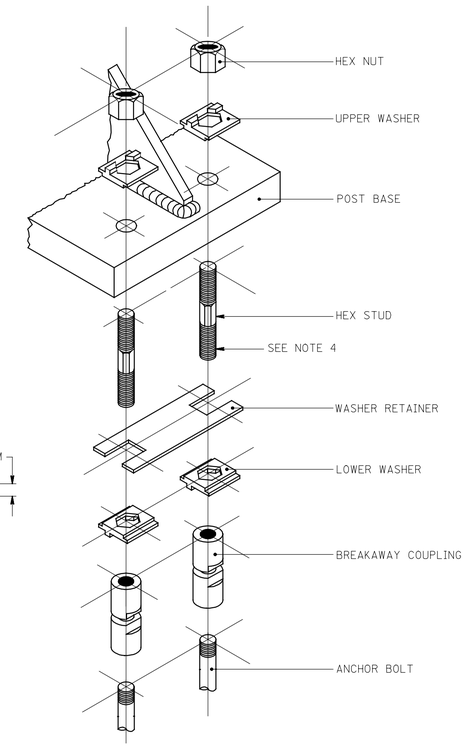

BREAKAWAY COUPLING ASSEMBLY (TYPICAL)

GENERAL NOTES:

1. ANCHOR BOLT ASSEMBLY & LEVELING PLATE SHALL BE STRUCTURAL STEEL CONFORMING TO ASTM SPECIFICATION A36M OR EQUIVALENT WITH MINIMUM YIELD STRENGTH OF 250 MPA.. NUTS, WASHERS AND TOP 150 MM OF BOLTS SHALL BE HOT DIP GALVANIZED. TOP 75 MM OF ALL ANCHOR BOLTS SHALL BE THREADED.
2. THE CONCRETE FOOTINGS FOR BREAKAWAY SIGNS SHALL BE POURED TO WITHIN APPROXIMATELY 25 MM OF THE BOTTOM OF THE LEVELING PLATE. THE LEVELING PLATE SHALL BE PLACED ON TOP, SET TO THE PROPER ELEVATION, AND MADE COMPLETELY LEVEL. THE ANCHOR BOLTS AND LEVELING PLATE CAN BE PROPERLY POSITIONED.
3. THE BREAKAWAY COUPLINGS SHALL BE SCREWED TO THE ANCHOR BOLTS, WITH CARE TAKEN THAT THE SMALLER END OF THE TAPER POINTS DOWNWARD. WHILE TIGHTENING THE COUPLINGS TO THE ANCHOR BOLTS, ONLY THE LOWER SET OF WRENCHING FLATS SHALL BE USED.
4. THE HEX STUD END WITH THE SMALLER THREAD DEPTH (29 MM) SHALL BE SCREWED INTO TOP OF BREAKAWAY COUPLING.
5. THE PROPER WASHER NUMBER (STAMPED ON WASHER) MUST BE USED FOR EACH POST AS INDICATED ON CD-619-12, "SIGN SUPPORT DATA TABLE".
6. RAISED PORTION OF LC WASHERS MUST BE POSITIONED AS INDICATED. CENTER OF RAISED PORTION MUST BE TOWARD ℄ OF POST.
7. WASHER RETAINERS SHALL BE PLACED IN THE GROOVES OF THE LC WASHER, AS SHOWN. IT MAY BE NECESSARY TO BACK OFF ON EACH STUD A MAXIMUM OF 30 DEGREES TO ALLOW THE WASHER RETAINER TO FIT.
8. THE POST BASE SHALL BE PLACED OVER THE STUDS ON TOP OF THE WASHER RETAINERS, AFTER WHICH THE TOP WASHER SHALL BE PLACED OVER EACH HEX STUD. AGAIN, IT IS IMPORTANT THAT THE RAISED PORTION OF THE WASHER CONTACT THE LOWER SURFACE OF THE NUT WHEN IT IS TIGHTENED ON THE STUD AND THAT THE ARROW, APPEARING ON THE TOP SURFACE OF THE WASHER, POINT TOWARD THE CENTER LINE OF THE POST.
9. THE HEAVY HEX NUT SHALL BE PLACED ON EACH HEX STUD AND TIGHTENED HOLDING THE UPPER WRENCHING FLATS OF THE COUPLING. THESE NUTS SHALL BE TIGHTENED BY THE TURN OF NUT METHOD.
10. COMPONENTS WHICH HAVE BEEN SAFTY DESIGNED WITH ENGLISH UNITS HAVE BEEN SOFT CONVERTED TO SI UNITS.
11. ALL DIMENSIONS ON THIS SHEET ARE IN MILLIMETERS UNLESS OTHERWISE NOTED.

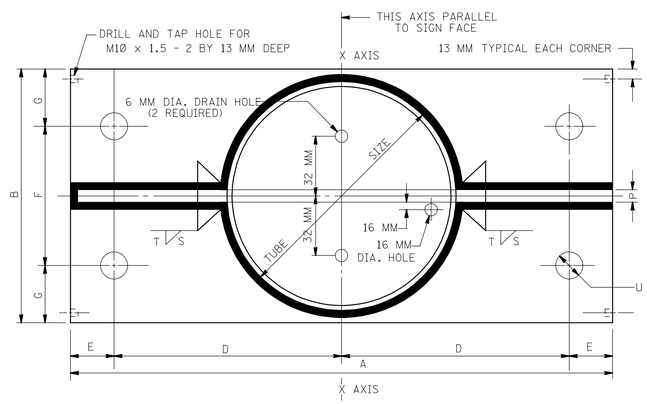

PLAN

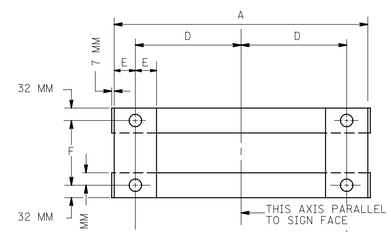

PLAN

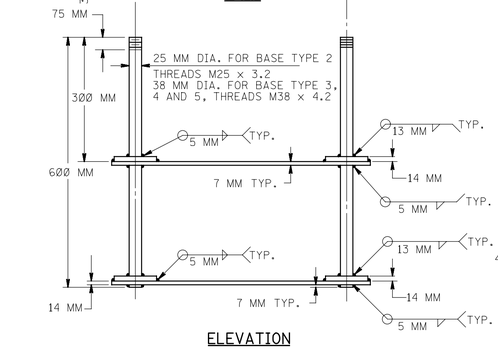

ELEVATION

ANCHOR BOLT DETAIL

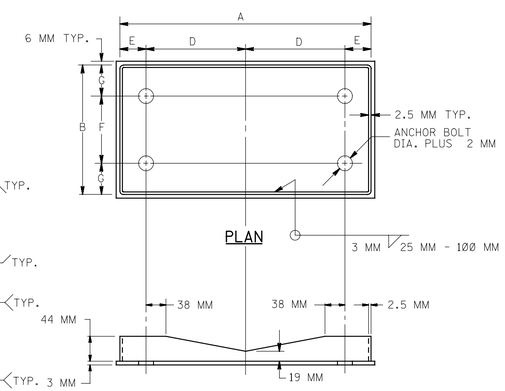

PLAN

ELEVATION

LEVELING PLATE DETAIL

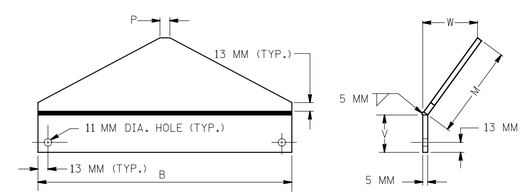

ANCHOR BOLT SHIELD

(BENT PLATE MAY BE USED)

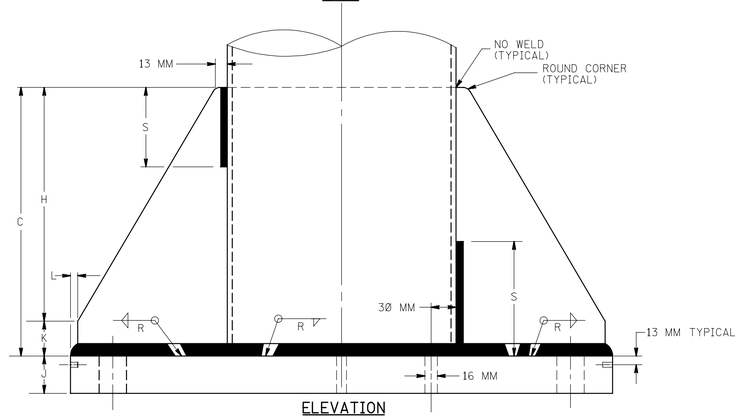

ELEVATION

POST BASE

POST BASE DATA

BASE TYPE	**A	**B	C	**D	**E	**F	**G	H	*J	K	L	M	P	R	S	**T	U	**V	W
UNITS	(MM)	(MM)	(MM)	(MM)	(MM)	(MM)	(MM)	(MM)	(MM)	(MM)	(MM)	(MM)	(MM)	(MM)	(MM)	(MM)	(MM)	(MM)	(MM)
2	337	191	205	127	41	102	44	180	32	25	7	140	14	10	89	10	32	25	48
3	457	241	265	178	51	127	57	230	38	35	13	165	16	13	121	13	44	32	67
4	559	292	280	229	51	152	70	240	44	38	13	125	16	16	264	10	44	41	64
5	711	343	330	305	51	178	83	285	51	44	13	125	20	13	318	10	44	51	79

*THE BASE PLATE THICKNESS "J" MUST CORRESPOND EXACTLY WITH THE BASE TYPE AS SHOWN IN THE TABLE ABOVE. SUBSTITUTION OF ANY OTHER BASE PLATE THICKNESS IS NOT PERMITTED.
**SAFETY DESIGNED ITEMS, SEE NOTE 10.

BREAKAWAY SIGN SUPPORTS FOR GROUND MOUNTED SIGNS

N.T.S.

CD-619-9

NEW JERSEY DEPARTMENT OF TRANSPORTATION

CONSTRUCTION DETAILS

RDC01D-4 - ORIGINAL SHEET

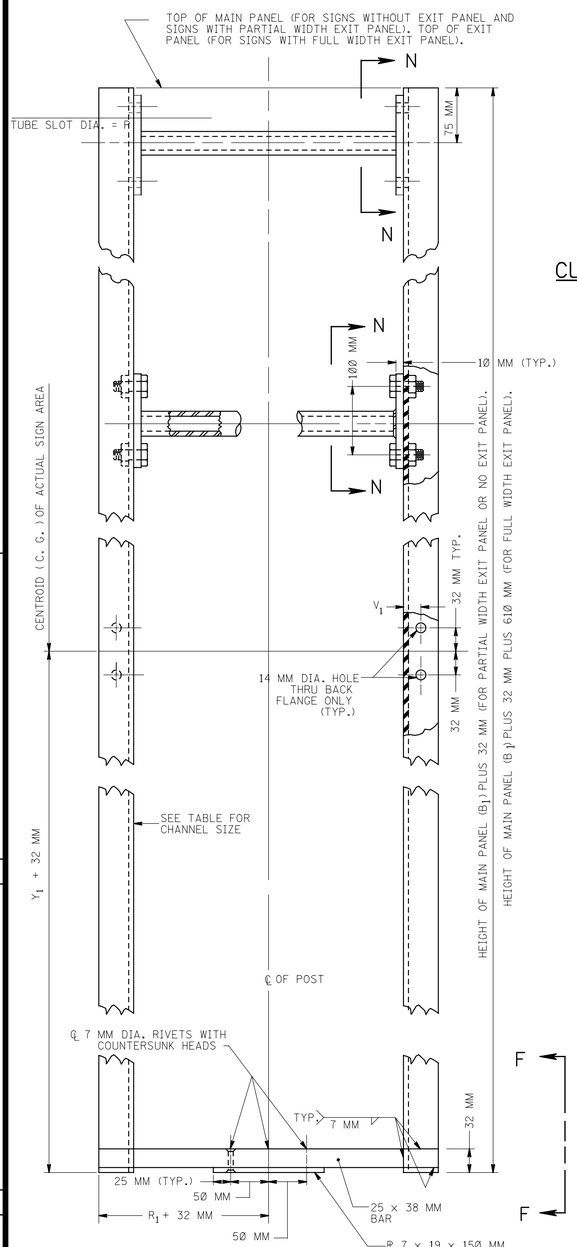

ELEVATION

CHANNEL FRAME

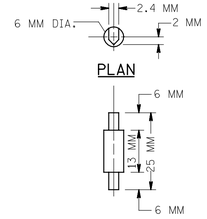

ELEVATION

CUTTING PIN DETAIL

BASE TYPE 2

SEE NOTE 1

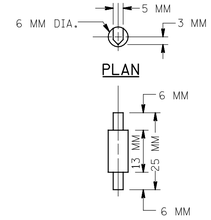

ELEVATION

CUTTING PIN DETAIL

BASE TYPES 3, 4 & 5

SEE NOTE 1

BASE TYPE	CHANNEL SIZE	V_1 MM
2	80[2.11	22
3	100[3.72	25
4	130[4.63	29
5	150[4.21	29

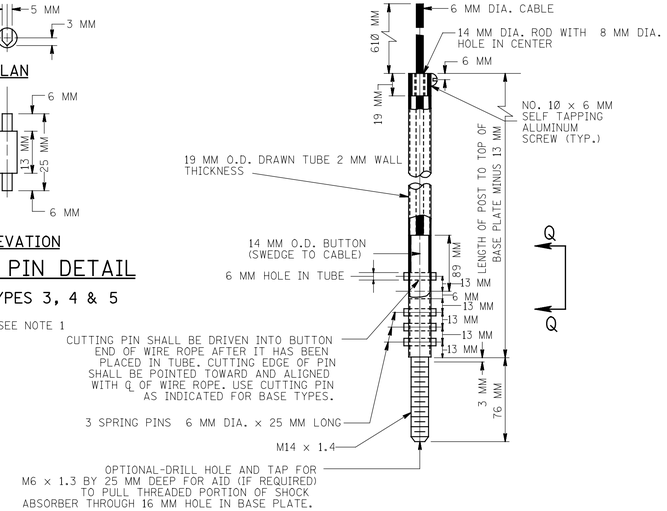

SHOCK ABSORBER

SEE NOTE 1

GENERAL NOTES:

1. COMPONENTS WHICH HAVE BEEN SAFETY DESIGNED WITH ENGLISH UNITS HAVE BEEN SOFT CONVERTED TO SI UNITS.
2. ALL DIMENSIONS ON THIS SHEET ARE IN MILLIMETERS UNLESS OTHERWISE NOTED.

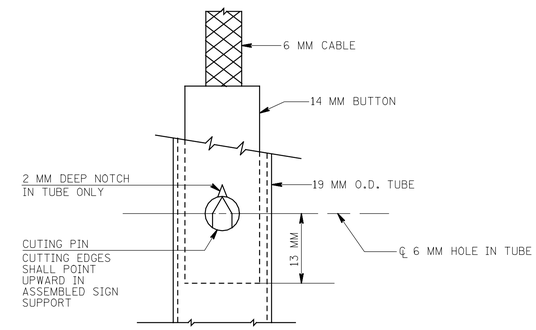

VIEW Q-Q

SEE NOTE 1

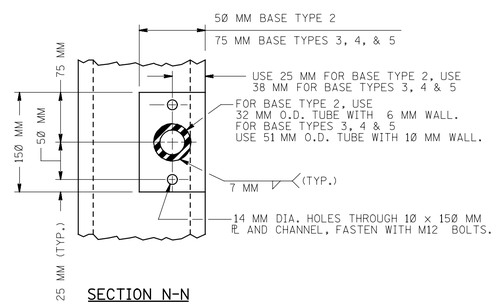

SECTION N-N

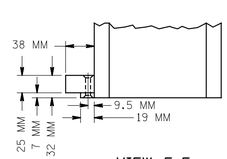

VIEW F-F

BREAKAWAY SIGN SUPPORTS FOR GROUND MOUNTED SIGNS

N.T.S.

CD-619-10

NEW JERSEY DEPARTMENT OF TRANSPORTATION

CONSTRUCTION DETAILS

CD-619-10.1

RDC010-4 - ORIGINAL SHEET

WASHER NUMBER	"D_2" MM	FACE COLOR CODE
1	2.5	ORANGE
2	3.8	YELLOW
3	5.1	BLUE
4	6.4	GREEN

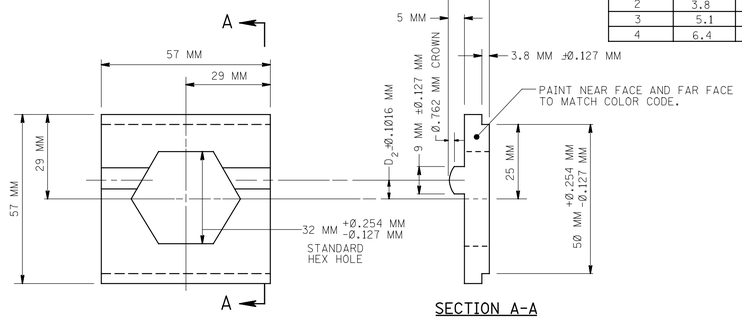

TOP PLAN
UPPER WASHER

SECTION A-A

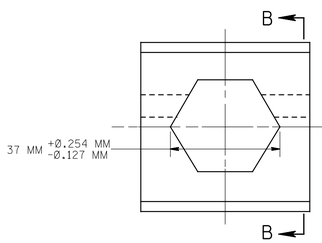

TOP PLAN
LOWER WASHER

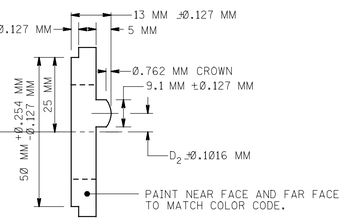

SECTION B-B

LOAD CONCENTRATING WASHER DETAILS

SEE NOTE 1

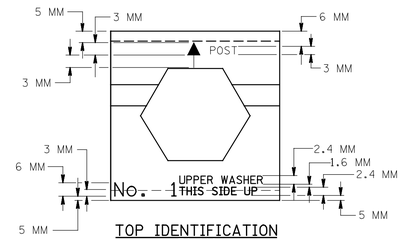

TOP IDENTIFICATION
PLAN
UPPER WASHER

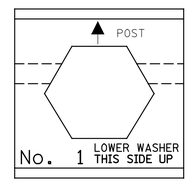

TOP IDENTIFICATION
PLAN
LOWER WASHER

LOAD CONCENTRATING WASHER IDENTIFICATION DETAIL

SEE NOTE 1

NOTE:
ALL LOAD CONCENTRATING WASHERS SHALL BE PERMANENTLY LABELED WITH APPROPRIATE WASHER NUMBER AND IDENTIFICATION AS SHOWN

GENERAL NOTES:

1. COMPONENTS WHICH HAVE BEEN SAFETY DESIGNED WITH ENGLISH UNITS HAVE BEEN SOFT CONVERTED TO SI UNITS.
2. ALL DIMENSIONS ON THIS SHEET ARE IN MILLIMETERS UNLESS OTHERWISE NOTED.

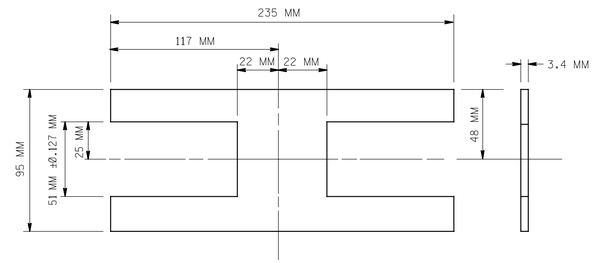

WASHER RETAINER

SEE NOTE 1

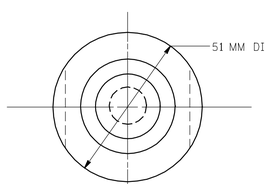

PLAN

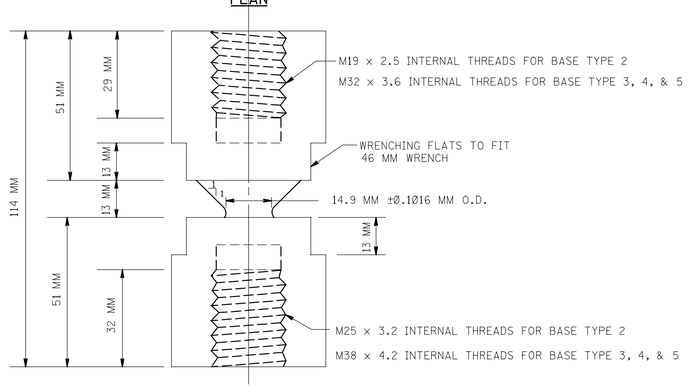

ELEVATION

BREAKAWAY COUPLING *

* SHOWN FOR INFORMATION ONLY.
COUPLINGS SHALL BE SUPPLIED BY N.J.D.O.T.

SEE NOTE 1

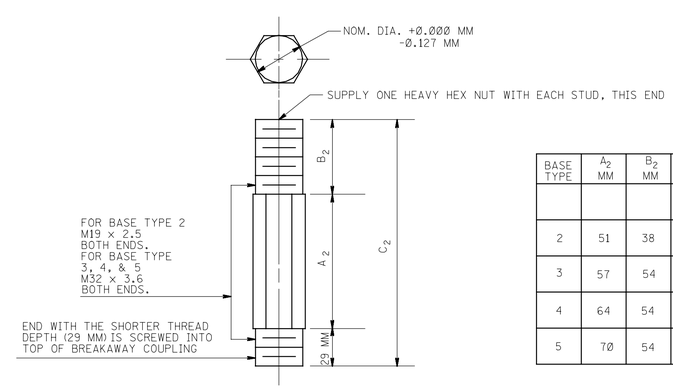

BASE TYPE	A_2 MM	B_2 MM	C_2 MM	HEX SIZE
2	51	38	117	19
3	57	54	140	32
4	64	54	146	32
5	70	54	152	32

HEX STUD LENGTHS & SIZES

SEE NOTE 1

CD-619-11.1

BREAKAWAY SIGN SUPPORTS FOR GROUND MOUNTED SIGNS

N.T.S.

CD-619-11

NEW JERSEY DEPARTMENT OF TRANSPORTATION

CONSTRUCTION DETAILS

BDC201-4 - ORIGINAL SHEET

SIGN SUPPORT DATA TABLE

IDENTIFICATION		OFFSET	SIGN SIZE			C.G. SIGN	NO. OF POSTS	TUBE SIZE		POST HEIGHT			BASE TYPE	DIMENSIONS TO TOP OF FOOTING			FOOTING DIMENSIONS		REINF. STEEL	L. C. WASHER NUMBER		
NO.	STATION	X_1	A_1	B_1	A_2	Y_1		O.D.	THK.	C_1	D_1	E_1		F_1	G_1	H_1	K_1	L_1	Z_1	POST #1	POST #2	POST #3

FOOTING BEVEL TABLE

IDENT. NO.	$50\%(L_1-B)$	Y		
		POST #1	POST #2	POST #3

GENERAL NOTES:

1. AN ASTERISK (*) IN COLUMN L_1 INDICATES THAT THE EXPOSED EDGE OF FOOTING MUST BE BEVELLED TO MEET THE 100 MM MAXIMUM PROJECTION REQUIREMENT.
2. LOAD CONCENTRATING WASHER FACE COLOR CODE SHALL BE AS FOLLOWS. L.C. WASHER # 1 ORANGE, L.C. WASHER # 2 YELLOW, L.C. WASHER # 3 BLUE, L.C. WASHER # 4 GREEN.
3. FOR IDENTIFICATION OF TABULAR ITEMS AND DETAILS RELATING THERETO, REFER TO BREAKAWAY SIGN SUPPORTS FOR GROUND MOUNTED SIGNS.

NOTE TO DESIGNER:
THIS SHEET REQUIRES DESIGN SPECIFIC INFORMATION TO BE ADDED AND INCLUDED IN THE CONTRACT PLANS.

REMOVE THIS NOTE AFTER DESIGN SPECIFIC INFORMATION IS ADDED.

BREAKAWAY SIGN SUPPORTS FOR GROUND MOUNTED SIGNS

CD-619-12

NEW JERSEY DEPARTMENT OF TRANSPORTATION

CONSTRUCTION DETAILS

CD-619-12.1

BDC010-4 - ORIGINAL SHEET

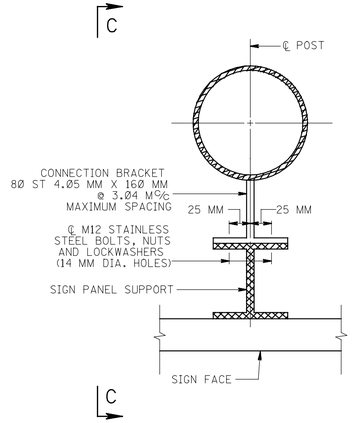

SECTION B-B

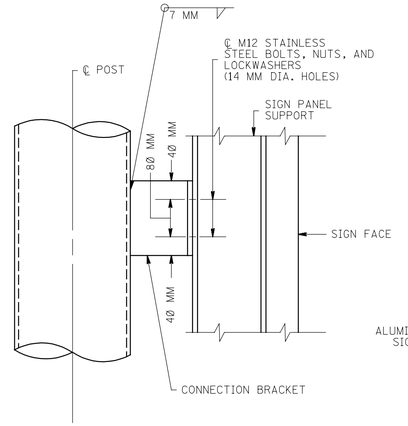

VIEW C-C

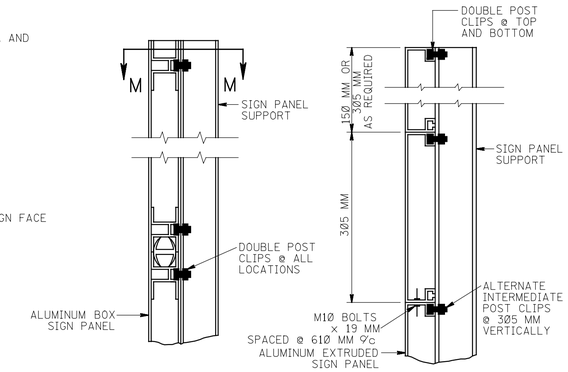

SIGN PANEL CONNECTION DETAILS

GENERAL NOTES:

1. USE CLASS "B" CONCRETE IN ALL FOOTINGS. ULTIMATE COMPRESSIVE STRENGTH f'c = 21 MPA
2. ALL FOOTINGS SHALL BE PLACED AGAINST UNDISTURBED OR ADEQUATELY COMPACTED EARTH, EXCEPT FOR FOOTING TOPS WHICH SHALL BE FORMED TO A DEPTH OF 75 MM BELOW GROUND LINE.
3. TOPS OF FOOTINGS ABOVE REFERENCE LINE ARE INDICATED BY PLUS (+) VALUE; AND BELOW REFERENCE LINE BY MINUS (-) VALUE.
4. MATERIAL FOR STRUCTURAL SHAPES AND PLATES SHALL BE ALUMINUM ALLOY 6061-T6.
5. ANCHOR BOLT ASSEMBLY SHALL BE STRUCTURAL STEEL CONFORMING TO ASTM SPECIFICATION A36M OR EQUIVALENT WITH MINIMUM YIELD STRENGTH OF 25Ø ØØØ KPA NUTS, WASHERS AND BOLTS SHALL BE HOTDIP GALVANIZED. THE TOP 15Ø MM OF ALL ANCHOR BOLTS SHALL BE THREADED.
6. WELDING OF ALUMINUM SHALL BE AS SPECIFIED IN THE CONSTRUCTION SPECIFICATIONS
7. UNUSUAL FOUNDATION CONDITIONS MAY REQUIRE REDESIGN OF FOOTING AND SUCH CONDITIONS SHALL BE BROUGHT TO THE ATTENTION OF THE ENGINEER.
8. DIMENSIONS FOR BASE TYPE A ARE DESIGNATED (A). DIMENSIONS FOR BASE TYPE B ARE DESIGNATED (B).
9. PROVIDE 1ØØ WF 4.55 EXIT PANEL BRACE FOR PARTIAL WIDTH EXIT PANELS ONLY.
10. ALL DIMENSIONS ON THIS SHEET ARE IN MILLIMETERS UNLESS OTHERWISE NOTED.

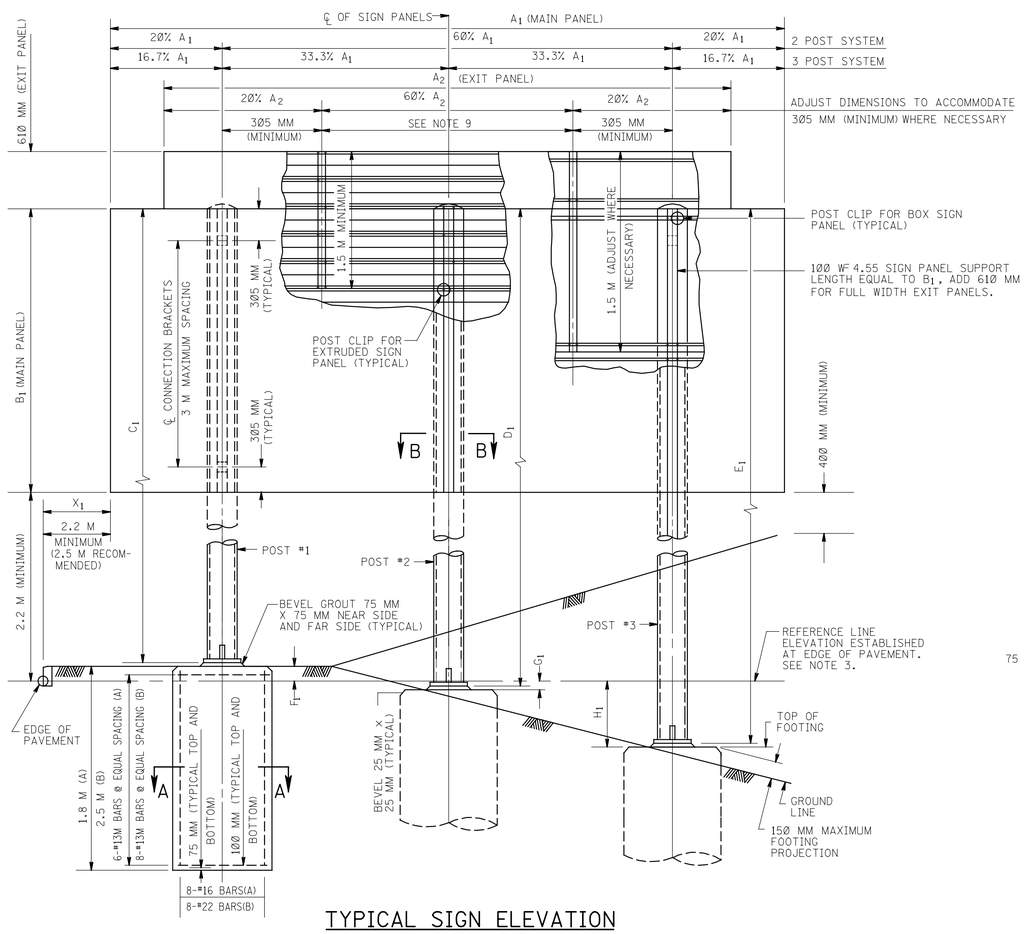

TYPICAL SIGN ELEVATION

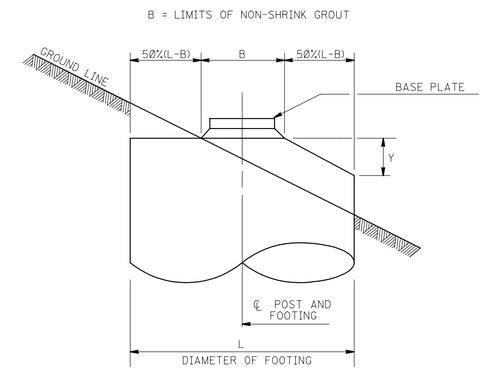

FOOTING BEVEL DETAIL

(BEND REINFORCEMENT TO FIT)

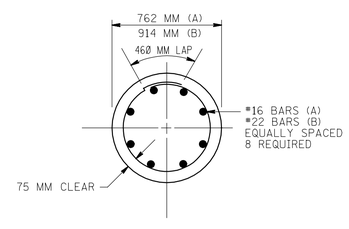

SECTION A-A

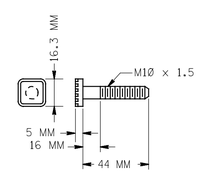

POST CLIP BOLT

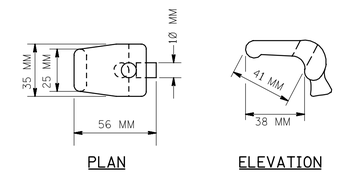

PLAN ELEVATION

POST CLIP

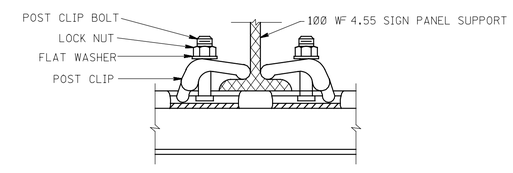

SECTION M-M

(BOX SIGN PANEL SHOWN.
EXTRUDED SIGN PANEL SIMILAR.)

NON-BREAKAWAY SIGN SUPPORTS
FOR GROUND MOUNTED SIGNS

N.T.S.

CD-619-13

NEW JERSEY DEPARTMENT OF TRANSPORTATION

CONSTRUCTION DETAILS

CD-619-13.1

BDC01D-4 - ORIGINAL SHEET

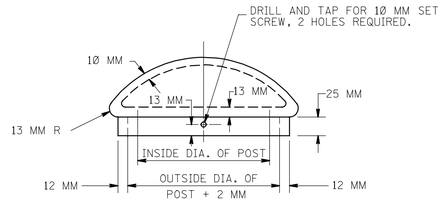

POST CAP DETAIL

GENERAL NOTES:

1. USE CLASS "B" CONCRETE IN ALL FOOTINGS. ULTIMATE COMPRESSIVE STRENGTH f'c = 21 MPA
2. ALL FOOTINGS SHALL BE PLACED AGAINST UNDISTURBED OR ADEQUATELY COMPACTED EARTH, EXCEPT FOR FOOTING TOPS WHICH SHALL BE FORMED TO A DEPTH OF 75 MM BELOW GROUND LINE.
3. TOPS OF FOOTINGS ABOVE REFERENCE LINE ARE INDICATED BY PLUS (+) VALUE; AND BELOW REFERENCE LINE BY MINUS (-) VALUE.
4. MATERIAL FOR STRUCTURAL SHAPES AND PLATES SHALL BE ALUMINUM ALLOY 6061-T6.
5. ANCHOR BOLT ASSEMBLY SHALL BE STRUCTURAL STEEL CONFORMING TO ASTM SPECIFICATION A36M OR EQUIVALENT WITH MINIMUM YIELD STRENGTH OF 250 000 KPA NUTS, WASHERS AND OF BOLTS SHALL BE HOT DIP GALVANIZED. THE TOP 150 MM OF ALL ANCHOR BOLTS SHALL BE THREADED.
6. WELDING OF ALUMINUM SHALL BE AS SPECIFIED IN THE CONSTRUCTION SPECIFICATIONS
7. UNUSUAL FOUNDATION CONDITIONS MAY REQUIRE REDESIGN OF FOOTING AND SUCH CONDITIONS SHALL BE BROUGHT TO THE ATTENTION OF THE ENGINEER.
8. DIMENSIONS FOR BASE TYPE A ARE DESIGNATED (A). DIMENSIONS FOR BASE TYPE B ARE DESIGNATED (B).
9. ALL DIMENSIONS ON THIS SHEET ARE IN MILLIMETERS UNLESS OTHERWISE NOTED.

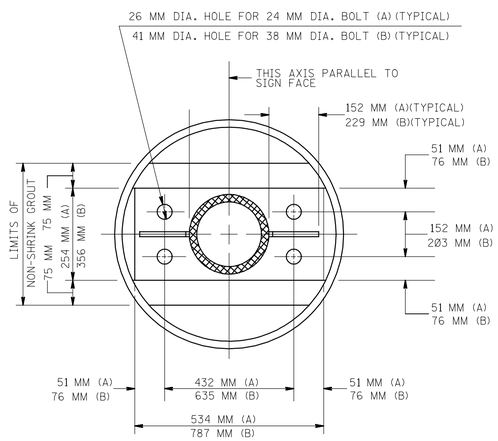

PLAN

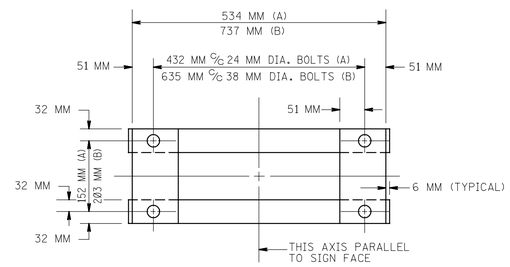

PLAN

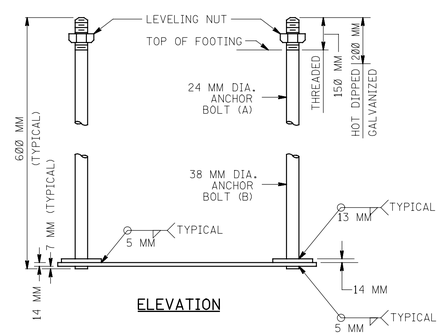

ELEVATION

ANCHOR BOLT DETAIL

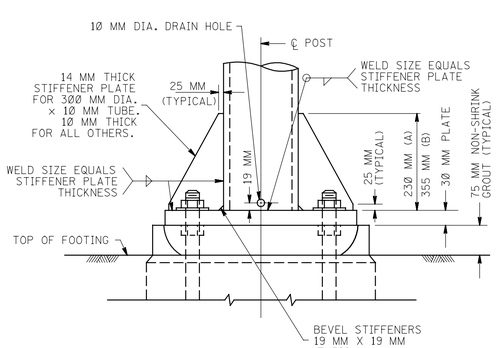

ELEVATION

POST BASE DETAIL

NON-BREAKAWAY SIGN SUPPORTS FOR GROUND MOUNTED SIGNS

N.T.S.

CD-619-14

NEW JERSEY DEPARTMENT OF TRANSPORTATION

CONSTRUCTION DETAILS

CD-619-14.1

BDC001D-4 - ORIGINAL SHEET

SIGN SUPPORT DATA TABLE

IDENTIFICATION		OFFSET	SIGN SIZE			NO. OF POSTS	TUBE SIZE		POST HEIGHT			BASE TYPE	DIMENSIONS TO TOP OF FOOTING		
NO.	STATION	X_1	A_1	B_1	A_2		O.D.	THK.	C_1	D_1	E_1		F_1	G_1	H_1

FOOTING BEVEL TABLE

IDENT. NO.	50%(L-B)	Y		
		POST #1	POST #2	POST #3

GENERAL NOTES:

1. AN ASTERISK (*) IN COLUMN BASE TYPE INDICATES THAT THE EDGE OF FOOTING MUST BE BEVELLED TO MEET THE 150 MM MAXIMUM PROJECTION REQUIREMENT.
2. FOR IDENTIFICATION OF TABULAR ITEMS, AND DETAILS RELATING THERETO, REFER TO NON-BREAKAWAY SIGN SUPPORTS FOR GROUND MOUNTED SIGNS.

NOTE TO DESIGNER:
THIS SHEET REQUIRES DESIGN SPECIFIC INFORMATION TO BE ADDED AND INCLUDED IN THE CONTRACT PLANS.

REMOVE THIS NOTE AFTER DESIGN SPECIFIC INFORMATION IS ADDED.

NOTE:

1. AN ASTERISK (*) IN COLUMN BASE TYPE INDICATES THAT THE EDGE OF FOOTING MUST BE BEVELLED TO MEET THE 150 MM MAXIMUM PROJECTION REQUIREMENT.
2. FOR IDENTIFICATION OF TABULAR ITEMS, AND DETAILS RELATING THERETO, REFER TO NON-BREAKAWAY SIGN SUPPORTS FOR GROUND MOUNTED SIGNS.
3. THIS SHEET REQUIRES DESIGN SPECIFIC INFORMATION TO BE ADDED AND INCLUDED IN THE CONTRACT PLANS.

NON-BREAKAWAY SIGN SUPPORTS FOR GROUND MOUNTED SIGNS

CD-619-15

NEW JERSEY DEPARTMENT OF TRANSPORTATION

CONSTRUCTION DETAILS

BDC010-4 - ORIGINAL SHEET

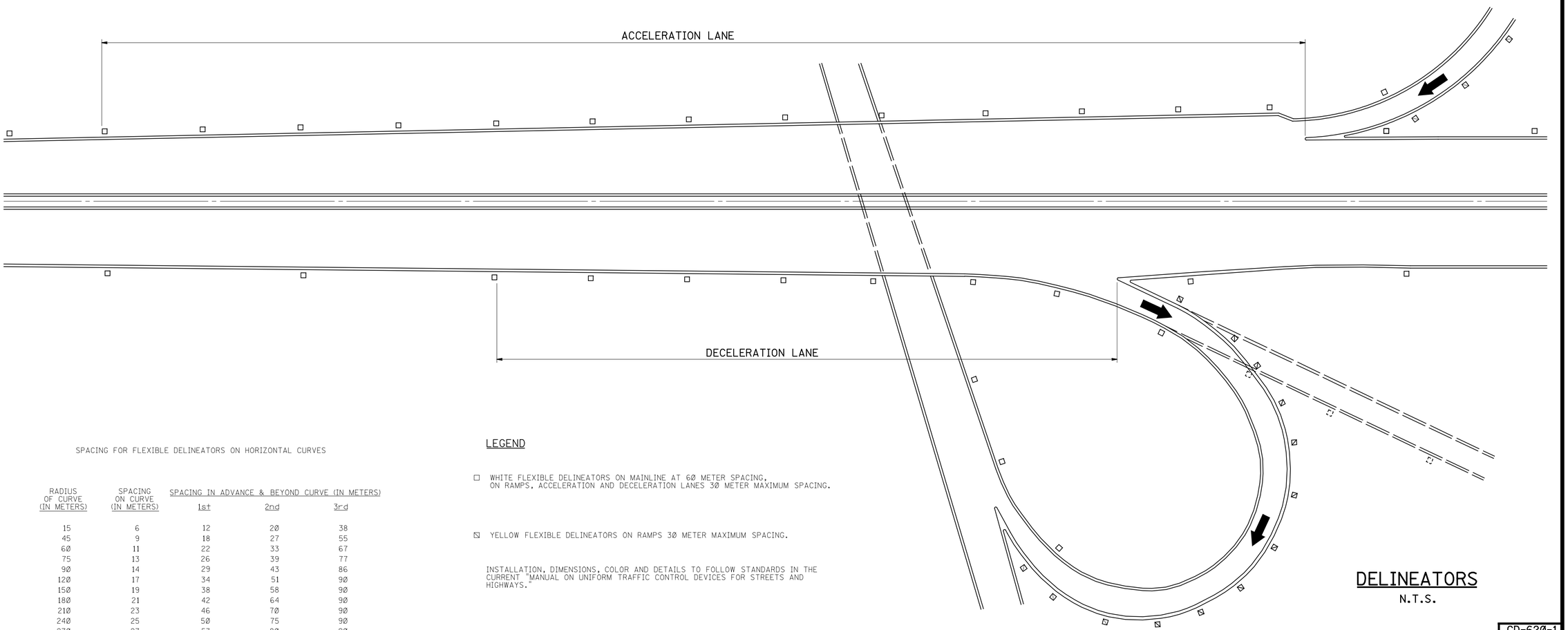

SPACING FOR FLEXIBLE DELINEATORS ON HORIZONTAL CURVES

RADIUS OF CURVE (IN METERS)	SPACING ON CURVE (IN METERS)	SPACING IN ADVANCE & BEYOND CURVE (IN METERS)		
		1st	2nd	3rd
15	6	12	20	38
45	9	18	27	55
60	11	22	33	67
75	13	26	39	77
90	14	29	43	86
120	17	34	51	90
150	19	38	58	90
180	21	42	64	90
210	23	46	70	90
240	25	50	75	90
270	27	53	80	90
300	28	56	84	90

SPACING FOR SPECIFIC RADII NOT SHOWN MAY BE INTERPOLATED FROM TABLE. THE MINIMUM SPACING SHALL BE 6 METERS. THE SPACING ON CURVES SHALL NOT EXCEED 90 METERS. IN ADVANCE OF OR BEYOND A CURVE, AND PROCEEDING AWAY FROM THE END OF THE CURVE, THE SPACING OF THE FIRST DELINEATOR IS 2S, THE SECOND 3S, AND THE THIRD 6S BUT NOT TO EXCEED 90 METERS. S REFERS TO THE DELINEATOR SPACING FOR SPECIFIC RADII COMPUTED FROM THE FORMULA $S = 1.66\sqrt{R - 15}$

LEGEND

□ WHITE FLEXIBLE DELINEATORS ON MAINLINE AT 60 METER SPACING, ON RAMPS, ACCELERATION AND DECELERATION LANES 30 METER MAXIMUM SPACING.

▨ YELLOW FLEXIBLE DELINEATORS ON RAMPS 30 METER MAXIMUM SPACING.

INSTALLATION, DIMENSIONS, COLOR AND DETAILS TO FOLLOW STANDARDS IN THE CURRENT "MANUAL ON UNIFORM TRAFFIC CONTROL DEVICES FOR STREETS AND HIGHWAYS."

DELINEATORS

N.T.S.

CD-620-1

CD-620-1.1

NOTE: ALL DIMENSIONS SHOWN ON THIS SHEET ARE IN MILLIMETERS UNLESS OTHERWISE NOTED.

NEW JERSEY DEPARTMENT OF TRANSPORTATION

CONSTRUCTION DETAILS

RDC010-4 - ORIGINAL SHEET

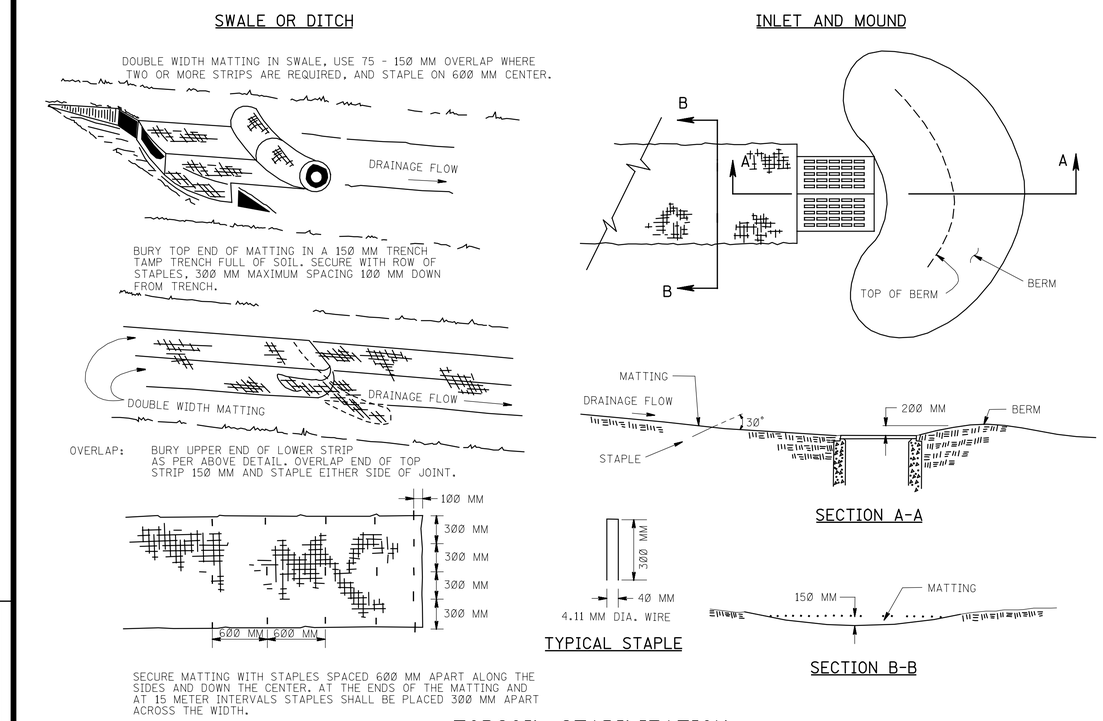

TOPSOIL STABILIZATION

CD-809-1.1

TOPSOIL STABILIZATION

N.T.S.

CD-809-1

NEW JERSEY DEPARTMENT OF TRANSPORTATION

CONSTRUCTION DETAILS

NOTE: ALL DIMENSIONS SHOWN ON THIS SHEET ARE IN MILLIMETERS UNLESS OTHERWISE NOTED.

BDC01D-4 - ORIGINAL SHEET

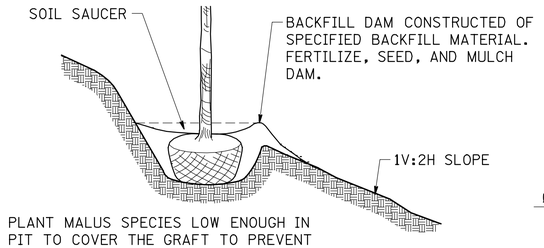

PLANT MALUS SPECIES LOW ENOUGH IN PIT TO COVER THE GRAFT TO PREVENT SPROUTING FROM THE ROOT STOCK.

TREE PLANTING – 1V:2H SLOPE

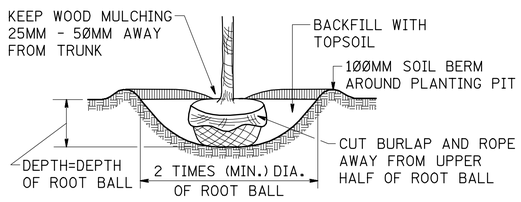

B & B MATERIAL

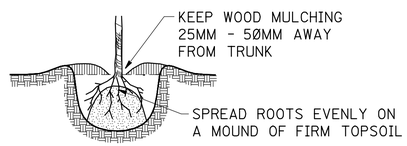

BARE ROOT MATERIAL

TREE & SHRUB PLANTING DETAIL

POSTS - 50MM x 50MM x 2.4M LUMBER, STAINED DARK BROWN, OR 2.4M WHITE CEDAR POST 50MM TO 75MM DIAMETER AT THE THINNER (LOWER) END OF THE POST.

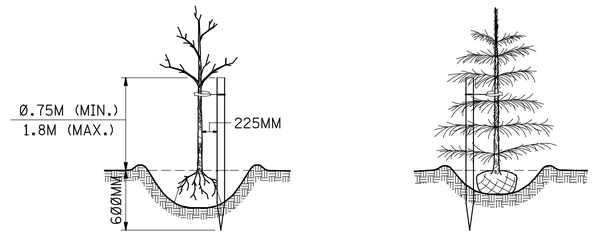

TREES REQUIRING ONE STAKE

DECIDUOUS TREES (EXCEPT SALIX) 25MM TO 40MM CALIPER, INCLUSIVE. CONE TYPE (PYRAMIDAL) TREES Ø.9M TO 1.5M HIGH, AND COLUMNAR EVERGREEN TREES 1.2M TO 2.1M HIGH, INCLUSIVE.

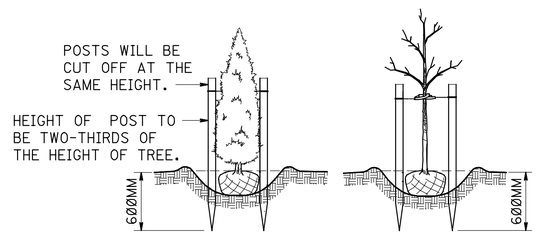

TREES REQUIRING TWO STAKES

DECIDUOUS TREES OVER 40MM TO 65MM CALIPER, INCLUSIVE. ALL SALIX REGARDLESS OF HEIGHT, CALIPER, BARE ROOT OR BALLED AND BURLAPPED. CONE TYPE (PYRAMIDAL) TREES 1.5M TO 2.1M HIGH AND COLUMNAR EVERGREEN TREES 2.1M TO 2.7M HIGH, INCLUSIVE.

STAKING DETAILS

DECIDUOUS TREES OVER 65MM TO 100MM CALIPER, CONE TYPE (PYRAMIDAL) TREES OVER 2.1M HIGH.

STAKES - 50MM x 100MM LUMBER OR WHITE CEDAR, 65MM DIAMETER AT THINNER (LOWER) END. NOTCHED 100MM FROM THE TOP.

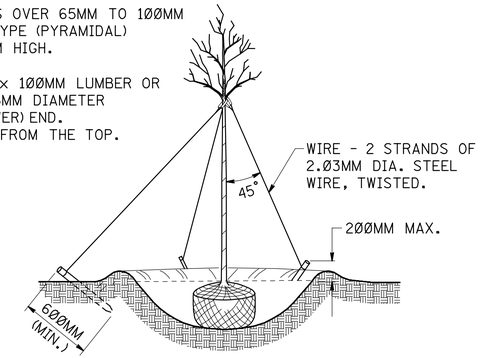

TREES REQUIRING THREE GUYS & STAKES

DECIDUOUS TREES OVER 100MM TO 200MM CALIPER. CONE TYPE (PYRAMIDAL) TREES OVER 100MM TO 200MM CALIPER. COLUMNAR EVERGREEN TREES OVER 2.7M HIGH.

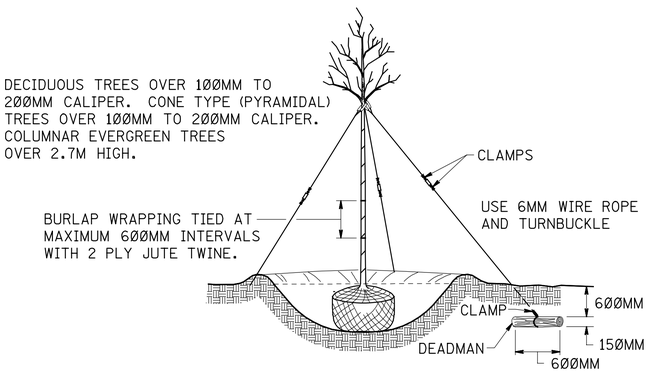

TREES REQUIRING THREE GUYS & DEADMEN

GUYING DETAILS

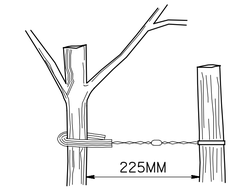

ANCHOR TREE TO POST(S) USING 2.03MM DIA. STEEL WIRE AND 13MM CORDED RUBBER OR PLASTIC HOSE.

DETAIL OF POST AND GUY WIRE

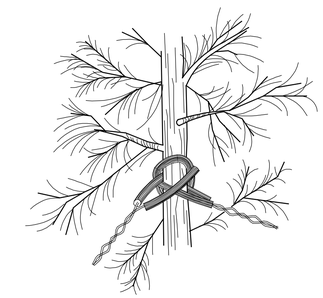

GUY WIRES SHOULD BE PLACED AT LEAST HALF WAY UP THE TRUNK.

DETAIL OF GUY WIRES AROUND TRUNK

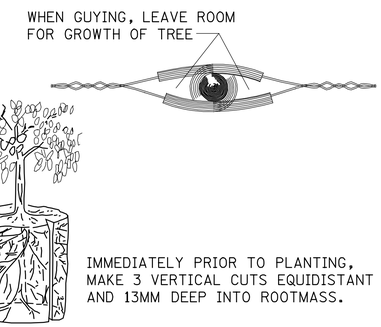

IMMEDIATELY PRIOR TO PLANTING, MAKE 3 VERTICAL CUTS EQUIDISTANT AND 13MM DEEP INTO ROOTMASS.

CONTAINERIZED PLANTS

FASTENING DETAIL

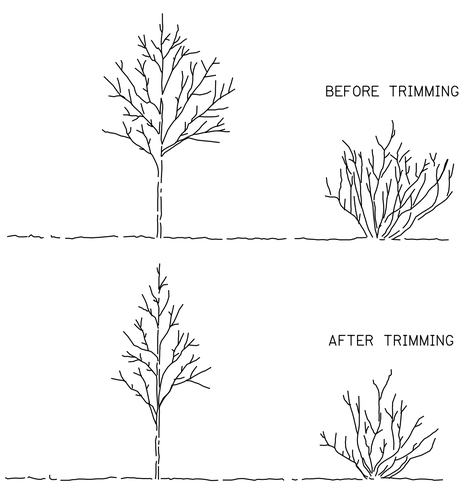

DAMAGED BRANCHES SHALL BE TRIMMED OFF BELOW THE POINT OF INJURY. THE CENTRAL TRUNK OR "LEADER" SHOULD BE LEFT INTACT AND THE SIDE BRANCHES SHOULD BE SHORTENED BY APPROXIMATELY ONE-THIRD TO ONE-HALF OF PREVIOUS SEASON'S GROWTH. BROKEN ROOTS SHALL BE CUT OFF ABOVE THE BREAK AND BRUISED ENDS CUT OFF CLEANLY.

WHEN PLANTING A YOUNG SHRUB, THIN TOP GROWTH BY ONE-THIRD TO BALANCE THE TOP WITH THE ROOTS. PRUNE JUST ABOVE A BUD AND RETAIN THE NATURAL SHAPE OF THE SHRUB.

PRUNING TREES WHEN PLANTING

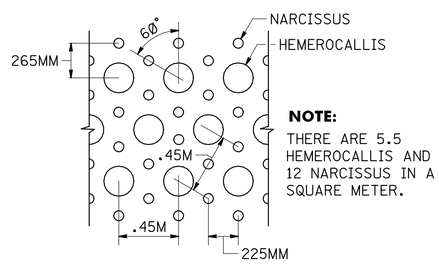

NOTE:
THERE ARE 5.5 HEMEROCALLIS AND 12 NARCISSUS IN A SQUARE METER.

HEMEROCALLIS AND NARCISSUS BED PLANTING DETAIL

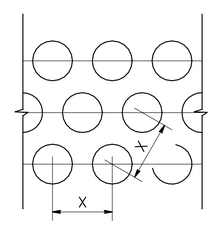

SHRUB BED PLANTING DETAIL

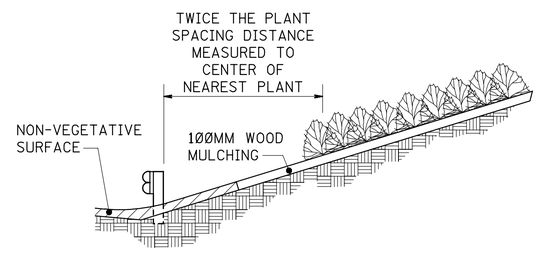

SHRUB PLANTING BEHIND GUIDE RAIL

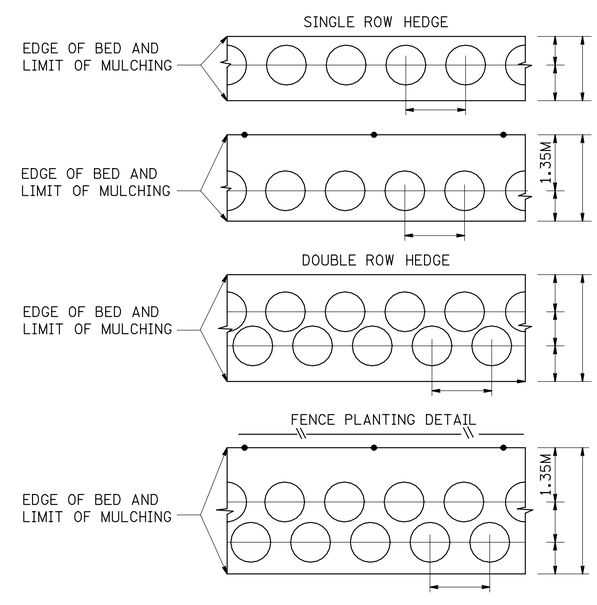

HEDGE PLANTING DETAILS

NOTE TO DESIGNER:

THIS SHEET REQUIRES DESIGN SPECIFIC INFORMATION TO BE ADDED AND INCLUDED IN THE CONTRACT PLANS.

REMOVE THIS NOTE AFTER DESIGN SPECIFIC INFORMATION IS ADDED.

PLANTING

N.T.S.

CD-813-1

NEW JERSEY DEPARTMENT OF TRANSPORTATION

CONSTRUCTION DETAILS

CD-813-1.1

BDC01D-4 - ORIGINAL SHEET

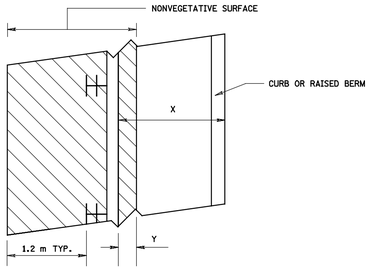

PLAN VIEW

X GUIDE RAIL OFFSET FROM EDGE OF PAVEMENT	Y WIDTH OF NONVEG SURFACE IN FRONT OF GUIDE RAIL
2.1 m OR GREATER 1.2 m 0.0 m	0.6 m 1.2 m 0.0 m

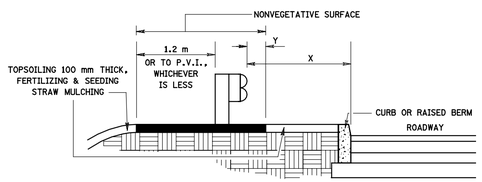

SECTION VIEW

NONVEGETATIVE SURFACES AROUND
GUIDE RAIL BEHIND
CURB OR RAISED BERM

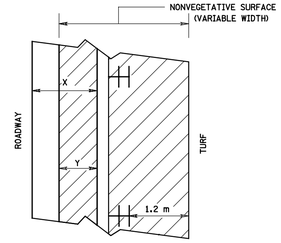

PLAN VIEW

X GUIDE RAIL OFFSET FROM EDGE OF PAVEMENT	Y WIDTH OF NONVEG SURFACE IN FRONT OF GUIDE RAIL
2.1 m OR GREATER 1.2 m 0.0 m	0.6 m 1.2 m 0.0 m

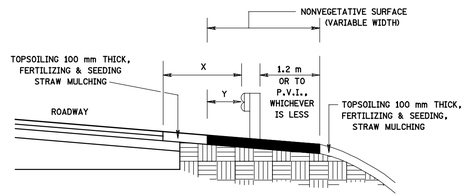

SECTION VIEW

NONVEGETATIVE SURFACE AT EDGE
OF PAVEMENT ON UMBRELLA SECTION
WHERE GUIDE RAIL IS USED

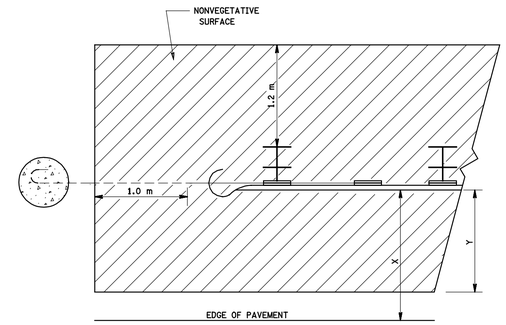

PLAN VIEW

X GUIDE RAIL OFFSET FROM EDGE OF PAVEMENT	Y WIDTH OF NONVEG SURFACE IN FRONT OF GUIDE RAIL
2.1 m OR GREATER 1.2 m 0.0 m	0.6 m 1.2 m 0.0 m

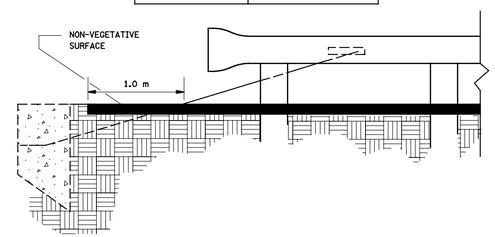

SECTION VIEW

NONVEGETATIVE SURFACES AROUND
GUIDE RAIL
ANCHORAGE TYPE I

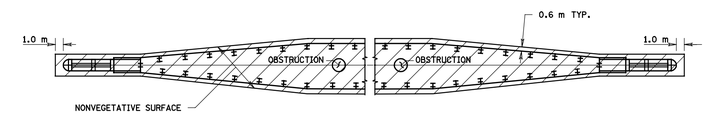

PLAN VIEW

NONVEGETATIVE SURFACE
AT
MEDIAN GUIDE RAIL

GENERAL NOTES:

1. IF THE END OF THE GUIDE RAIL IS BURIED IN THE SLOPE, THE LIMIT OF NONVEGETATIVE SURFACE RELATIVE TO THE BURIED GUIDE RAIL WILL BE DETERMINED BY THE RESIDENT ENGINEER.
2. SEE TYPICAL SECTIONS FOR CROSS SLOPES IN ROADSIDE (BORDER OR SIDEWALK AREA).

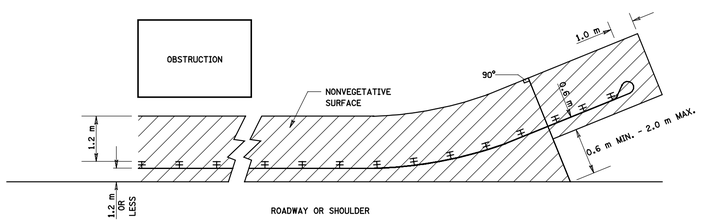

PLAN VIEW

NONVEGETATIVE SURFACE AROUND
FLARED GUIDE RAIL WHERE GUIDE RAIL OFFSET
FROM EDGE OF PAVEMENT IS 1.2 m OR LESS

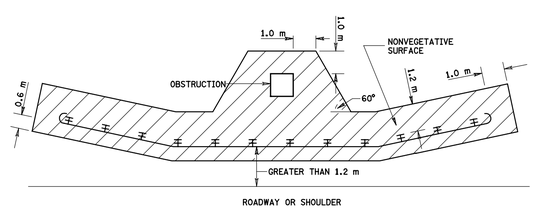

PLAN VIEW

NONVEGETATIVE SURFACE AROUND
FLARED GUIDE RAIL WHERE GUIDE RAIL OFFSET
FROM EDGE OF PAVEMENT IS GREATER THAN 1.2 m

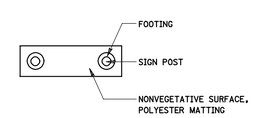

PLAN VIEW

THE NONVEGETATIVE SURFACE SHALL FORM A RECTANGULAR PAD WHOSE OUTSIDE LIMITS EXTEND A MINIMUM OF 1.0 M BEYOND THE POST FOOTING.

NONVEGETATIVE SURFACE AROUND
OVERHEAD SIGN FOUNDATIONS AND
UNDER LARGE GROUND MOUNTED SIGNS

NONVEGETATIVE SURFACE DETAILS

N.T.S.

CD-814-1

NEW JERSEY DEPARTMENT OF TRANSPORTATION

CONSTRUCTION DETAILS

CD-814-1.1

BDC010-4 - ORIGINAL SHEET